Physics – Uspekhi **42** (8) 817 – 822 (1999)

REVIEWS OF TOPICAL PROBLEMS PACS numbers: **42.25.–p**, **75.25.+z**, **75.30.–m**, **78.20.–e**

Polarized light in an anisotropic medium versus spin in a magnetic field

V S Zapasskiĭ, G G Kozlov

Contents

Abstract. The analogy between polarization optics effects and the dynamics of a spin in a magnetic field is analyzed based on the fact that the Bloch equation for a spin in a magnetic field is formally identical to the evolution equation for the quasi-spin vector of a light propagating in an optically anisotropic medium. Among the effects discussed within this framework are light polarization beats in a birefringent medium; optical activity suppression in the media with linear birefringence; suppression of linear birefringence in the media with spatially modulated gyration; 'adiabatic' transformation of light polarization in media of smoothly varying anisotropy, and two- and three-pulse polarization echoes.

1. Introduction

One of the most popular methods of description of polarization transformation of the light travelling in an anisotropic medium is that of the Jones matrix, which represents the light polarization state by a complex two-component column vector, and the anisotropic medium by a propagation matrix (Jones matrix) [1, 2]. The fact that the light polarization state is described by two angles (ellipticity and azimuth of the polarization ellipse axis) allows one to connect in a unique fashion each Jones vector with a unit vector in a three-dimensional space (the 'quasi-spin'). In this way, the Poincare sphere is built, with each point of its surface corresponding to a certain orientation of the quasi-spin or, in other words, to a certain type of light polarization. The motion of the end of the vector over the Poincare sphere reflects the evolution of the light polarization in the optically anisotropic medium.

The spatial dynamics of polarization transformation of the light in anisotropic medium have much in common with dynamics of a spin in a magnetic field. This similarity includes polarization analogs of the effects of spin precession, nutation, magnetic resonance, two- and three-pulse spin echo, adiabatic fast passage, and phase relaxation. In spite of the fact that the equations of evolution of the light quasi-spin vector, formally coincident with the Bloch equations, were derived and studied fairly long ago [3 – 5], the above analogy, as far as we know, has not been so far consistently described in the scientific literature. In this paper, we make an attempt to consider this analogy most comprehensively. Some essential aspects of this approach have been treated in our previous publication [6] which did not include, however, the effects of stimulated polarization echo and 'adiabatic' transformation of light polarization.

In Section 2, we will give a brief theoretical description of the dynamics of polarization transformation of the light in a nonabsorbing medium with linear and circular birefringence. In Sections 3 – 7, we will consider (in the framework of the above analogy) polarization beats in a birefringent medium, the effect of suppression of optical activity in media with linear birefringence, the effect of suppression of linear birefringence in media with spatially modulated gyration, 'adiabatic' transformation of the light polarization in anisotropic media, and also the effects of two- and three-pulse polarization echo, which, to the best of our knowledge, have not been covered so far in the scientific literature as effects of linear polarization optics. These effects are, on the one hand, of considerable methodological interest making it possible to draw a fairly full analogy between two classes of different physical phenomena and, on the other hand, may find use in

V S Zapasskiĭ, G G Kozlov All-Russia Research Center
"Vavilov State Optical Institute",
199034 St. Petersburg, Russian Federation
Tel. (7-812) 428-45 66. Fax (7-812) 428-72 40
E-mail: gkozlov@snoopy.phys.spbu.ru

Received 13 January 1999
Uspekhi Fizicheskikh Nauk **169** (8) 909 – 915 (1999)
Translated by V S Zapasskiĭ; edited by A Radzig

devices for fiber-optic communication and optical information processing as well as for the diagnostics of the quality of the polarization-maintaining optical waveguides.

2. Dynamics of the light quasi-spin in an optically anisotropic medium

Let us consider polarization transformation of the light with an initial Jones vector $|i\rangle$, propagating through a medium with elliptic birefringence of general type. By decomposing the Jones vector $|i\rangle$ of the incident light over the normal waves $|+\rangle$ and $|-\rangle$, i.e.

$$|i\rangle = C_+|+\rangle + C_-|-\rangle\,,$$

we obtain a general expression for the Jones vector $|f\rangle$ of the transmitted light, namely

$$|f\rangle = C_+|+\rangle\exp(\mathrm{i}Dn_+) + C_-|-\rangle\exp(\mathrm{i}Dn_-)\,. \tag{1}$$

Here $D = 2\pi d/\lambda = kd$ (λ is the light wavelength, k is the wave vector, and d is the optical path). In the coordinate system with its z-axis directed along the light beam, the Jones vectors of the normal waves $|\mp\rangle$ will be eigenvectors of a two-dimensional matrix of the x- and y-components of the inverse permittivity tensor of the medium, usually referred to as the transverse nonpermittivity tensor $\hat{\eta}$ [7]:

$$\hat{\eta} = \begin{pmatrix} \eta_{xx} & \eta_{xy} \\ \eta_{yx} & \eta_{yy} \end{pmatrix}$$

($\eta_{ik} = \varepsilon_{ik}^{-1}$).

The eigenvalues of this matrix are equal to the inverse squares of the refractive indices of the normal waves. For small anisotropy, the two-dimensional tensor $\hat{\eta}$ can be represented in the form $\hat{\eta} = 1/n^2 + \Delta\hat{\eta}$, where n is the average refractive index and $\Delta\hat{\eta}$ is a tensor, small compared with $1/n^2$. The normal modes in this case will evidently be given by eigenvectors of the matrix $\Delta\hat{\eta}$. It can also easily be shown that the eigenvalues of the matrix $\varepsilon_\mp$ are related to the refractive indices of the normal waves by the relationship $n_\mp = n(1 - \varepsilon_\mp/2)$. Without loss of generality, we can assume that $n = 1$. Let us direct the x and y axes along the distinguished directions of anisotropy of the medium. Then, in this coordinate system, the real symmetric part of the tensor $\Delta\hat{\eta}$, related to the linear birefringence, becomes diagonal and the matrix $2\Delta\hat{\eta}$ can be represented in the form

$$2\Delta\hat{\eta} = h_0\widehat{S}_z + h_1\widehat{S}_y\,, \tag{2}$$

where $\widehat{S}_x$ and $\widehat{S}_y$ are the Pauli spin-matrices

$$\widehat{S}_z = \frac{1}{2}\begin{pmatrix} 1 & 0 \\ 0 & -1 \end{pmatrix}, \qquad \widehat{S}_y = \frac{1}{2}\begin{pmatrix} 0 & -\mathrm{i} \\ \mathrm{i} & 0 \end{pmatrix},$$

and $h_0\widehat{S}_z$ and $h_1\widehat{S}_y$ are the parts of the tensor, related to the linear and circular birefringence, respectively. For $h_1 = 0$, the normal waves are polarized along the x and y axes, and h_0 is the difference between the refractive indices for these waves. For $h_0 = 0$, tensor (2) appears to be purely imaginary, and the normal modes are circularly polarized waves with the difference between the corresponding refractive indices equal to h_1, which will be hereinafter referred to as *gyration*. Taking into account that the vectors $|\mp\rangle$ are the eigenvectors of matrix (2), one can easily find that the Jones vector $|f\rangle$ (1) satisfies the 'Schrödinger equation'

$$\frac{-\mathrm{i}\partial}{\partial D}|f\rangle = \widehat{H}|f\rangle\,, \tag{3}$$

where $\widehat{H} = 2\Delta\hat{\eta}$. The analog of time in this Schrödinger equation is, to within a constant multiplier, the spatial coordinate D. The operator $\widehat{H}$ [see Eqn (2)] is seen to have the form of the Hamiltonian of interaction between the spin $\mathbf{S}$ and magnetic field $\mathbf{H}$ with the components $H_z = h_0$ and $H_y = h_1$. Therefore, we can use the known result [8] that the $\mathbf{S}$ vector whose components are expressed via the Pauli spin-matrices by the formulas

$$\langle\widehat{S}_i\rangle \equiv \langle f|\widehat{S}_i|f\rangle \qquad (i = x, y, z)\,,$$

obeys the Bloch equation

$$\frac{\mathrm{d}\mathbf{S}}{\mathrm{d}D} = [\mathbf{H}, \mathbf{S}]\,. \tag{4}$$

In an explicit form, the Jones vector $|i\rangle$ and the quasi-spin projections $\langle S_i\rangle$ are given by the expressions

$$|i\rangle = \begin{pmatrix} \exp(\mathrm{i}\delta)\cos\phi \\ \sin\phi \end{pmatrix}, \tag{5}$$

$$\langle S_z\rangle = 0.5\cos(2\phi)\,,$$
$$\langle S_x\rangle = 0.5\sin(2\phi)\cos\delta\,,$$
$$\langle S_z\rangle = -0.5\sin(2\phi)\sin\delta\,.$$

Here ϕ is governed by the ratio of amplitudes of the x- and y-components of the light wave [$\phi = \arctan(E_y/E_x)$], and δ is the phase shift between these components.

Thus, we come to the conclusion that the evolution of the light polarization state in an anisotropic medium is formally identical to the dynamics of a spin in an external magnetic field. In this analogy, the linear and circular birefringence correspond to two components of the magnetic field, the light polarization is the counterpart of spin orientation in the external magnetic field, the spatial coordinate is the counterpart of time, the coordinate of the light entrance into the medium corresponds to the moment when the magnetic field is switched on, and the normal waves (normal polarization states) are the counterparts of the spin eigenstates in the magnetic field. On the Poincare sphere, the 'effective magnetic field' acting upon the light 'spin' is directed along the diameter connecting two normal polarizations of the light in the medium (see, for example, Ref. [1]). For convenience, we orient the Poincare sphere so that the effective magnetic field h_0 related to linear anisotropy is directed vertically. In this arrangement, the meridional plane xz (Fig.1) will correspond to the linearly polarized waves with different azimuths of the polarization plane. Along the parallels of the sphere, formed by the quasi-spins with equal polar angles ϕ, the polarization states are located with equal ratios of projections of the vector $\mathbf{E}$ (E_x and E_y) onto the normal waves, specified by polarization states of the sphere's poles A and B.

We consider now, in a qualitative way, the main manifestations of the above analogy in polarization optics.

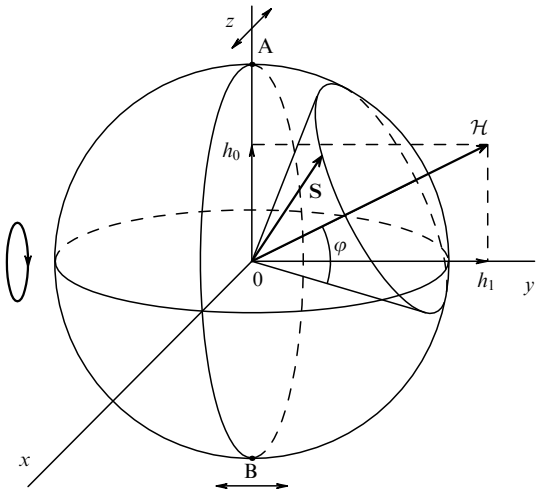

Figure 1. Precession of quasi-spin **S** of the light propagating in the optically anisotropic medium with the linear birefringence h_0 and gyration h_1. The Poincare sphere in this and subsequent figures is oriented so that the y-axis corresponds to circularly polarized light, and the xz-plane to linear polarizations.

3. Polarization beats in a birefringent medium — Larmor's precession of a spin in a magnetic field

Polarization beats are the simplest and most evident manifestation of the above-described analogy. In conformity with the known properties of solutions of the Bloch equations, transformation of polarization state of the light after passing a length D in the medium is described by rotation of the relevant quasi-spin vector around the direction $\mathbf{H}(0, h_1, h_0)$ by an angle of $|\mathbf{H}|D$ (Fig. 1) or, in other words, by precession of the quasi-spin vector around this direction. For the simplest case of a linearly birefringent medium with the normal polarization state specified by the Poincare sphere's poles A and B, the polarization evolution of the light will be described by precession of the quasi-spin vector around the z-axis over the polarization states with a fixed ratio of the E_x and E_y components (see, for instance, Ref. [1]). Thus, Larmor's precession of a spin in a constant magnetic field corresponds, in polarization optics, to beats of polarization states of the light propagating through a homogeneous birefringent medium. The amplitude of the beats is greatest when the incident light is a superposition of normal waves with equal amplitudes (the apex angle of the precession cone being 90°), and the beats are absent when the polarization of the light beam corresponds to that of a proper wave in the medium. The latter situation is similar to the absence of the precession for a spin in its eigenstate.

4. Optical activity of a medium with predominant linear birefringence — the effect of a weak transverse magnetic field on spin precession in a strong field

The picture of the Bloch precession of a light quasi-spin makes visual the known effect of suppression of the optical (or magnetooptical) activity in a medium with predominant linear birefringence. It is this effect that hampers measuring the Faraday rotation in optically anisotropic crystals along directions other than the optic axis. In a medium possessing pure optical activity, evolution of the light polarization state is governed by precession of the quasi-spin vector in the xz-plane around the vector $\mathbf{h_1}$ directed along the gyration axis y. The angle of rotation of the polarization plane in such a medium can evidently be arbitrary large for sufficiently large optical paths. The situation drastically changes in the presence of predominant linear birefringence. When the inequality $|h_1| \ll |h_0|$ is satisfied, the magnitude and direction of the effective magnetic field $\mathbf{H}(0, h_1, h_0)$ are controlled by the predominant component of the linear birefringence h_0 and only weakly affected by the small gyration h_1. As a result, the polarization evolution of the light in the medium will not be significantly disturbed by the optical activity (see, for example, Ref. [9]). To take an illustration, the quasi-spin of the light wave normal for a medium with pure linear birefringence, in the presence of a small gyration h_1 will appear only slightly deviated from the effective magnetic field $\mathbf{H}(0, h_1, h_0)$ [by an angle of $\alpha = \arctan(h_1/h_0)$] which will give rise to its precession with a small angle α of the precession cone and, hence, to small spatial oscillations of its polarization state (Fig. 2). This suppression of optical activity is a manifestation of the vector law of summation of the linear and circular birefringence [11] and, in terms of the Bloch model, reflects the obvious impossibility of significant precession of a spin around a weak (constant) magnetic field $\mathbf{h_1}$ in the presence of a strong magnetic field $\mathbf{h_0}$ orthogonal to $\mathbf{h_1}$.

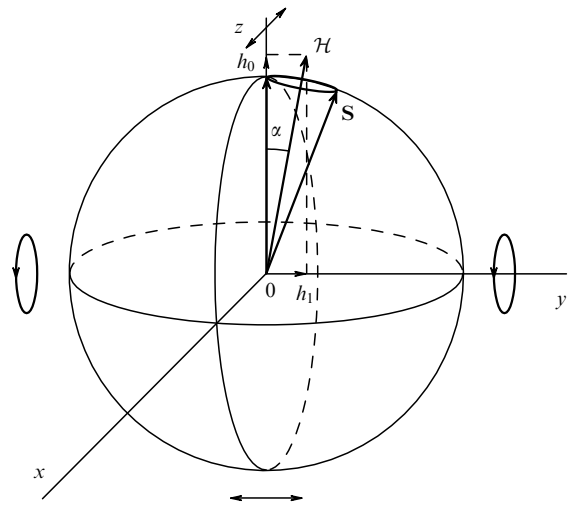

Figure 2. Suppression of optical activity in a linearly birefringent medium.

5. Optical activity of a medium with spatially modulated gyration — nutation and the effect of magnetic resonance

As is known from the theory of magnetic resonance, a weak magnetic field can significantly affect the state of a spin in a strong external magnetic field provided that the former field is not constant but rather oscillates with a frequency close to that of the Larmor precession of the spin. In terms of polarization optics this means, in particular, that a small gyration h_1 can substantially alter the polarization properties of a linearly birefringent medium if the gyration spatially oscillates with a frequency close to that of the light polarization beats, i.e. close to the frequency of Larmor

precession of the quasi-spin of the light wave in the effective field of linear birefringence $\mathbf{H}(0,0,h_0)$. Let, for example, the gyration of the medium vary along the light beam as

$$h_1(D) = g_0 \cos(\Omega D)\,.$$

The spatial period of this dependence, in conformity with definition of D, equals λ/Ω.

To analyze the dynamics of the light quasi-spin, it is expedient, as is usually done in the theory of magnetic resonance, to pass over in the Bloch equations (4) to a coordinate system rotating with the spatial frequency Ω. Then Eqn (4) will gain the form of the Bloch equation with the vector $\mathbf{H}'$ independent of D:

$$\frac{\mathrm{d}\mathbf{S}'}{\mathrm{d}D} = [\mathbf{H}', \mathbf{S}]\,,$$

where $\mathbf{H}' = (0, g_0, h_0 - \Omega)$. If $\Omega = h_0$, i.e. the spatial period of gyration equals the period of polarization beats (λ/h_0) related to the linear birefringence h_0, the quasi-spin of the light wave in the rotating coordinate system will behave as if in a medium with a spatially uniform gyration g_0. If, in addition, the length of the medium is an integer of spatial periods of the gyration, the 'rotating coordinate system' will make (in the process of light propagation) an integral number of rotations and will get into coincidence with its initial position at the exit of the medium. Thus, the quasi-spin of the light at the exit appears to be rotated by an angle $g_0 D$ as if the light was propagating through a medium with constant gyration g_0 and without any linear birefringence.

The above polarization effect evidently represents an analog of the magnetic resonance effect in the absence of relaxation. In this analogy, the suppression of the linear birefringence (vanishing of the z-component of the vector $\mathbf{H}' = (0, g_0, h_0 - \Omega)$ at $h_0 = \Omega$) corresponds (in the spin dynamics) to suppression of the effective longitudinal magnetic field in the coordinate system rotating with a frequency close to that of the Larmor precession, and the rotation of the polarization plane in 'resonance' conditions corresponds to spin nutation at the Rabi frequency (see, for instance, Ref. [8]).

The above effect finds application in devices of up-to-date integrated optics [9] and can also be used for measuring the Verdet constant of optically anisotropic crystals when the linear birefringence hampers detection of the Faraday rotation (see, for example, Ref. [10]).

6. Polarization echo — two-pulse spin echo

Let us consider now what the polarization analog of the two-pulse spin-echo effect, well known in magnetic resonance, looks like. The spin-echo effect is known to result from compensation for the reversible dephasing in a spin system with a dispersion of Larmor frequencies. An analog of the mentioned dispersion in an optical system may be, for example, the spread of spatial frequencies of the polarization beats, related to chromatism of the phase retardation in an anisotropic medium.

Let us consider an extended single-mode nongyrotropic optical waveguide with a spatially homogeneous linear birefringence. The optical waveguide is chosen as the most realistic and natural case of the extended birefringent medium. Let us place the central region of the waveguide into a spatially periodic magnetic field. In practice, this can be done by placing a coil of several waveguide turns into a uniform magnetic field [12] (Fig. 3). The length of the waveguide turn is chosen equal to the spatial period of the polarization beats in the waveguide at the wavelength λ_0 (λ_0/h_0). In conformity with the aforesaid, such a 'resonance' magnetic field, unlike a uniform one, can substantially affect the polarization state of light with a wavelength λ_0. If the length of this region is chosen equal to a half of a period of the quasi-spin Rabi nutation, the mentioned magnetooptical activity realizes an effective π-pulse, and the polarization evolution of the light in the waveguide will exactly correspond to the pattern of spin precession in the spin-echo effect.

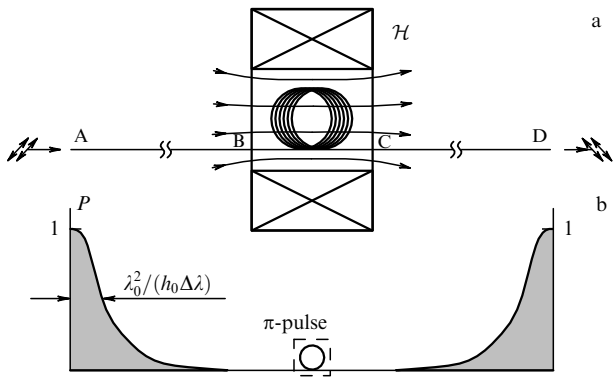

Figure 3. (a) Schematic of observation of the polarization-echo effect in a birefringent optical waveguide. (b) Spatial variation of the light polarization degree P in the optical waveguide.

Indeed, let the light with an average wavelength λ_0, spectral width $\Delta\lambda$, and a polarization specified by the quasi-spin $\mathbf{S}$ be incident on the entrance A of the waveguide (Fig. 3a). Let us consider the evolution of quasi-spin of a spectral component with a wavelength λ in the coordinate system rotating with a frequency $\Omega_0 = 2\pi h_0(\lambda_0)/\lambda_0$. As was already pointed out, the effective birefringence of the medium in the rotating coordinate system appears to be suppressed, and the quasi-spin of the spectral component λ will precess around the effective field $\mathbf{H}(0,0,\Omega_0 - \Omega)$ $[\Omega = 2\pi h_0(\lambda)/\lambda]$ with a small frequency $|\mathbf{H}|D$ governed by the difference between λ and λ_0 and by the refractive index dispersion. After passing the path AB, the quasi-spin of the chosen spectral component precessing around $\mathbf{H}$ will appear to be rotated by some angle α and will occupy the position $\mathbf{S}_1$ (Fig. 4). In the region BC located in a spatially oscillating magnetic field (Fig. 3a) the quasi-spin vector, in conformity with the aforesaid, will rotate by 180° around the $y(h_1)$-axis (the direction of the rotation axis is actually determined, as in the case of true spin echo, by the phase of the oscillating field h_1) and will occupy the position $\mathbf{S}_2$. Further, as the light will travel to the end of the waveguide, its quasi-spin will rotate around the h_0 vector (see Fig. 4) by the same angle α, since the region with an oscillating magnetic field is closely located in the middle of the waveguide. As can easily be seen, in the coordinate system rotated by π around the y-axis the quasi-spin dynamics in the region $\mathbf{S}_2 \to \mathbf{S}'$ coincides with its dynamics in the region $\mathbf{S} \to \mathbf{S}_1$ in the initial coordinate system with h_0 replaced by $-h_0$. With such a substitution, the light quasi-spin $\mathbf{S}_2$ rotating around the z-axis after reaching the waveguide end will get into coincidence with the initial vector $\mathbf{S}$. Therefore, the light quasi-spin at the exit of the waveguide ($\mathbf{S}'$ in Fig. 4) will represent the initial quasi-

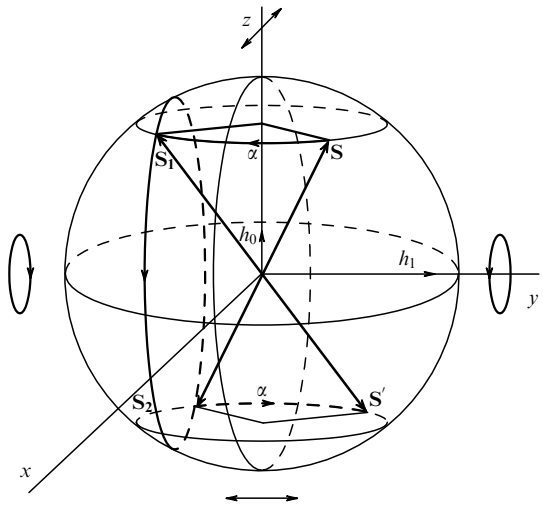

Figure 4. Quasi-spin evolution of a monochromatic component of the light in the polarization-echo effect.

spin vector **S** rotated by π with respect to the y-axis. To within this rotation, the quasi-spin of the output light will be identical to that of the incident light. If the quasi-spin of the initial polarization state of the light is directed along the y-axis (which is usually the case in a standard description of the spin-echo effect), the polarization states of the input and output light beams will be identical.

The above description is evidently valid for any spectral component of the incident quasi-monochromatic radiation. As a result, the whole picture of polarization evolution of the light can be exhibited as follows. The light of a finite spectral width $\Delta\lambda$, polarized at the waveguide entrance, proves to be practically depolarized after passing the path of the order of $\lambda_0^2/(h_0\Delta\lambda)$ (the depolarization length is the analog of the free induction decay time in spin dynamics). By this moment, quasi-spins of different spectral components have spread sufficiently uniformly over a conic surface with the apex angle controlled by polarization state of the incident light (by the ratio of projections of the initial quasi-spin vector onto vectors of normal waves in the guide). Under the action of the 'π-pulse' in the middle of the waveguide, the quasi-spin of each spectral component will suffer a rotation, due to which all the quasi-spins after passing the second half of the waveguide will gather again at the exit of the waveguide and will produce the 'polarization echo' — light wave polarized identically to that at the entrance (to within the unessential rotation of the quasi-spin by π) (see Fig. 3b). In spin dynamics, this process is frequently referred to as the 'time inversion' produced by the π-pulse of the high-frequency magnetic field. In polarization optics, this corresponds to the inversion of the spatial coordinate.

The above realization of the π-pulse (using spatially modulated gyration) was chosen to retain the integrity of the birefringent medium (waveguide). By sacrificing this requirement and using the opportunity (inaccessible for magnetism) to instantaneously change the effective magnetic field in polarization optics, we can produce the π-pulse in a much simpler way. As can easily be seen, what is needed is to cut the waveguide in the middle and to insert into the gap, thus obtained, a half-wave plate with its axes rotated by 45° relative to the waveguide birefringence axes. This will give the same result that was achieved with the aid of modulated gyration. In magnetic terms, this event corresponds to switching off the magnetic field h_0 and simultaneous switching on the transverse field h_1 for a time interval equal to half of the period of the spin precession in the field h_1. One more, most straightforward, version of the 'time inversion' is also possible: two halves of the waveguide are coupled, being rotated with respect to each other by $\pi/2$. In terms of a spin in a magnetic field, this corresponds to instantaneous inversion of the magnetic field h_0. Inversion of the quasi-spin precession becomes trivial in this case.

The above effect can be used in fiber-optic communication systems for reproducing at the exit of a uniformly birefringent optical waveguide the light polarization modulation present at its entrance. As one can easily see, the chromatism of the birefringence similar to the magnetic-field inhomogeneity in the spin-echo effect causes reversible dephasing of the coherent precession and, therefore, destroys information contained in the polarization state of a light beam. A sort of decoder — the region with the spatially modulated magnetic field — allows one to restore this information.

7. Stimulated polarization echo — three-pulse spin echo

In the framework of the above-advanced analogy, we can also construct the exact analog of the three-pulse spin-echo effect which allows one (in magnetic terms) to store information about the time interval between two resonance pulses in the spectral relief of the spin-system population.

Let us consider the polarization evolution of the light in the following experimental arrangement. Let a nonmonochromatic linearly polarized light be propagating through an extended linearly birefringent medium with two gaps (a and b) equally spaced (by the length L) from its ends (Fig. 5a). The polarization plane of the incident light is assumed to make an angle of 45° with the birefringence axes of the medium (the quasi-spin is directed along the y-axis, Fig. 5b), and the length L to significantly exceed the depolarization length L_{dep}. Then, when coming to the first gap a, the light appears to be virtually completely depolarized — the quasi-spins of spectral components of the light beam are distributed sufficiently uniformly over the xy-plane (Fig. 5c). However, because of various phase retardation for different spectral components, the polarization state of the light beam appears to be spectrally modulated. Due to the adopted assumption $L \gg L_{\text{dep}}$, the spectral period of this polarization modulation turns out to be much smaller than the spectral width $\Delta\lambda$ of the

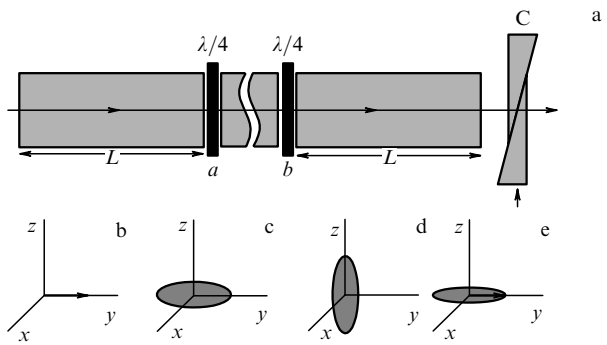

Figure 5. Schematic of observation of the three-pulse polarization-echo effect (a) and corresponding evolution of the light quasi-spin (b – e).

light. What counts is that several spectral components possess the same polarization and, hence, the same position of the quasi-spin vector in the xy-plane.

Let us subject the light quasi-spins to the '$\pi/2$-pulse' by inserting into the a gap a quarter-wave phase plate with its birefringence axes directed at an angle of 45° to the axes of the birefringent medium. As a result, the xy-plane filled with the quasi-spins will rotate by an angle of 90° around the y-axis and will take up a position corresponding to the xz-plane (Fig. 5d). After this operation, the quasi-spins of certain spectral components will appear directed along the z-axis, i.e. will coincide with vectors of normal polarization modes in the medium and, in the process of further propagation of the light, will prove to be 'frozen'. As can be easily seen, the relevant polarization states are characterized by a periodic spectral structure with a period of $\Delta\nu$ governed (under the given birefringence h_0) by the length L: $\Delta\nu = c/(h_0 L)$. The information about the length L of the initial depolarizing section of the medium, thus coded in the spectral structure of polarization of the light wave, will be stored until the moment of action of the second $\pi/2$-pulse which will return this intact array of quasi-spins back into the xy-plane. The second $\pi/2$-pulse is implemented in the same way as the first one using a quarter-wave phase plate (b, Fig. 5a). In this sequence of polarization transformations, the indicated array of quasi-spins can be considered subjected as a result to the π-pulse and, for this array, the situation turns out to be similar to that in the two-pulse echo: the initial polarization state of the light will be restored at a distance L from the phase plate b. Without going into details of quantitative description of the effect, notice that similarly to the case of the stimulated spin-echo effect in magnetic resonance the amplitude of the echo signal will be relatively small, since the signal is formed by far from all the spins (Fig. 5e). In other words, the degree of polarization in the echo pulse (even in ideal conditions) will be lower than 100%. The shape and amplitude of the echo signal can be detected similarly to the case of the two-pulse echo by means of the polarization compensator C (Fig. 5a) and can be used, for instance, for diagnostics of the optical waveguide quality.

In conclusion of this section, note the two following points. Firstly, as can easily be seen, for the spectrally modulated polarized light involved in formation of the stimulated echo signal discussed above, one can observe multiple echo signals — well-known in magnetic resonance — for the lengths of the last segment of the waveguide (after the gap b) multiple of L. Secondly, since the above consideration did not include explicitly the effects of irreversible dephasing, the initial polarization state of the light can be entirely restored at the exit of the waveguide. This will require, for one example, to insert after the region ab of the waveguide a half-wave plate and a section of the waveguide identical to that of ab. Thus, we will in fact restore the polarization state of the light at the entrance of the ab region using the simple two-pulse echo (see Section 6). After that the amplitude of the signal of the stimulated echo will reach 100%.

8. 'Adiabatic' transformation of the light polarization in an anisotropic medium — the effect of adiabatic fast passage

The effect of adiabatic following of the smooth variations in parameters of anisotropy of the medium by the light polarization, considered recently in Ref. [13], constitutes basically a polarization analog of the effect of adiabatic fast passage well known in spin dynamics. The essence of the effect is that in a medium with a smoothly varying anisotropy a normal light wave at the entrance of the medium will remain normal in the process of its propagation through the medium, in the same way as a spin in the absence of relaxation follows the direction of a slowly varying magnetic field. As was shown in Ref. [13], this effect can be used to realize a virtually perfect achromatic polarization converter of a new type. It should be emphasized that the conditions of adiabatic fast passage can be implemented with polarized light much more easily than with spins because the relaxation phenomena in the former case are much less essential.

9. Conclusions

The analogy between the evolution of the polarization state of the light in an anisotropic medium and the dynamics of coherence in an ensemble of two-level atoms with inhomogeneous broadening, considered in this paper, allows one to visually describe the main effects of polarization optics and, in addition, to predict some new effects. Moreover, the above analogy permits one to use the available solutions of quantum-mechanical problems as solutions to the relevant problems of polarization optics. Note, in particular, that the problem of adiabatic fast passage for the longitudinal magnetic field linearly varying in time can be solved exactly [14]. This result can evidently be used for analysis of the polarization converters considered in Ref. [13].

In our opinion, the proposed approach above all is of methodological interest since it enables one to significantly simplify the qualitative analysis of polarization-related effects in anisotropic media. Besides, the effects described in this paper can find application in optical devices for information processing and in experimental studies of optically anisotropic media.

References

1. Azzam R M A, Bashara N M *Ellipsometry and Polarized Light* (Amsterdam: Elsevier, 1977) [Translated into Russian (Moscow: Mir, 1981)]
2. Shurcliff W A *Polarized Light* (Cambridge: Harvard University Press, 1962) [Translated into Russian (Moscow: Mir, 1965)]
3. Kubo H, Nagata R *J. Opt. Soc. Am.* **73** 1719 (1983)
4. Kubo H, Nagata R *J. Opt. Soc. Am. B* **2** 30 (1985)
5. Zvezdin A K, Kotov V A *Magnitooptika Tonkikh Plenok* (Magnetooptics of Thin Films) (Moscow: Nauka, 1988)
6. Zapasskiĭ V S, Kozlov G G *Opt. Spektrosk.* **78** 100 (1995)
7. Yariv A, Yeh P *Optical Waves in Crystals. Propagation and Control of Laser Radiation* (New York: Wiley, 1984) [Translated into Russian (Moscow: Mir, 1987)]
8. Slichter Ch P *Principles of Magnetic Resonance* 2nd ed. (Heidelberg: Springer-Verlag, 1978) [Translated into Russian (Moscow: Mir, 1981)]
9. Chetkin M V, Shcherbakov Yu I *Fiz. Tverd. Tela* (Leningrad) **11** 1620 (1969)
10. Stolen R H, Turner E H *Appl. Opt.* **19** 842 (1980)
11. Nye J F *Physical Properties of Crystals. Their Representation by Tensors and Matrices* 2nd ed. (Oxford: Clarendon Press, 1964) [Translated into Russian (Moscow: Mir, 1967)]
12. Day G W et al. *J. Lightwave Technol.* **LT-2** 56 (1984)
13. Darsht M Ya, Zel'dovich B Ya, Kundikova N D *Opt. Spektrosk.* **82** 660 (1997)
14. Demkov Yu N *Vestn. Leningr. Univ. Fiz. Khim.* (4) 7 (1966)