Physics – Uspekhi **41** (9) 941 – 944 (1998)

METHODOLOGICAL NOTES PACS numbers: **03.30.+p**, 42.25.Bs, 98.62.Py

Some notes on the relativistic Doppler effect

Yu I Hovsepyan

Contents

Abstract. The properties of the analytical formula of the relativistic Doppler-effect are discussed from the geometric standpoint. It is shown, in particular, that, contrary to the widely accepted view, as the observer and the source of electromagnetic radiation approach one another, in addition to the violet shift also a zero and a red shift ($z \geqslant 0$) can be observed depending on the angle θ between the vector of relative velocity β and the observation direction.

1. Introduction

The modification of observable frequency, and, therefore, of observable wavelength of a propagating wave of any nature, depending on the relative velocity of the observer and the source of the wave, was predicted in acoustics and optics theoretically by C Doppler in 1842, was soon experimentally detected and named the Doppler-effect.

Well known in an analytical aspect at least since 1905 (A Einstein) [1] the formula of relativistic Doppler-effect, as was unexpectedly found, is erroneously interpreted. The author could not discover neither in the literature (for example, Refs [2 – 6]), nor in broad personal dialogue with physicists and astrophysicists of the P N Lebedev Physical Institute, the Institute of General Physics, and Moscow State University a correct understanding of the singularities of the relativistic Doppler-effect. For example, the widely distributed opinion, in particular, is that for an *approaching* observer and source of electromagnetic radiation the wavelength is *always shortened*, or, that the transversal Doppler-effect is always negligible, as it is an effect of second order of smallness [4 – 6].

As in the case of electromagnetic waves, which will be considered below, wavelengths are measured in experiments, but not frequencies (using diffraction gratings, interferometers and others), the further discussion will be in the language of wavelengths.

Yu I Hovsepyan Astronautics and Space Center, P N Lebedev Physics Institute, Russian Academy of Sciences,
Leninskiĭ prosp. 53, 117924 Moscow, Russia
Tel. (7-095) 333 31 66
Fax (7-095) 333 23 78
E-mail: hovsep@dpc.asc.rssi.ru

Received 2 April 1998
Uspekhi Fizicheskikh Nauk **168** (9) 1037 – 1041 (1998)
Translated by Yu I Hovsepyan; edited by S D Danilov

2. Characteristic features of the Doppler-effect

The relative *modification of a wavelength* as an outcome of the *relativistic* Doppler-effect is described by the equation [1]:

$$\frac{\lambda(\beta,\theta)}{\lambda(0,\theta)} = (1-\beta\cos\theta)\gamma(\beta)\,, \tag{1}$$

where

$$\gamma(\beta) = \frac{1}{\sqrt{1-\beta^2}}\,.$$

The magnitude of the relative Doppler-*shift* z is described by the equation:

$$z(\beta,\theta) = \frac{\Delta\lambda(\beta,\theta)}{\lambda(0,\theta)} = \frac{\lambda(\beta,\theta)-\lambda(0,\theta)}{\lambda(0,\theta)} = (1-\beta\cos\theta)\gamma(\beta) - 1\,. \tag{2}$$

The above mentioned expressions (1) and (2), do not depend on the azimuth angle, therefore the surfaces appropriate to them, the cuts of which are represented accordingly on Fig. 1 and Fig. 4, have rotational symmetry.

In the *nonrelativistic* approximation at $\beta \to 0$ and hence $\gamma \to 1$ the above-mentioned formulas become:

$$\frac{\lambda(\beta,\theta)}{\lambda(0,\theta)} = 1-\beta\cos\theta\,, \tag{3}$$

$$z(\beta,\theta) = \frac{\Delta\lambda(\beta,\theta)}{\lambda(0,\theta)} = \frac{\lambda(\beta,\theta)-\lambda(0,\theta)}{\lambda(0,\theta)} = -\beta\cos\theta\,. \tag{4}$$

The sign '–' in the last equation shows, that in the nonrelativistic approximation for any angle of observation in the interval $0 \leqslant \theta < 90^\circ$ only a violet-shift is observed [$\lambda(\beta,\theta) < \lambda(0,\theta)$, that is $z < 0$], in the interval $90^\circ < \theta \leqslant 180^\circ$ only a red-shift is observed [$\lambda(\beta,\theta) > \lambda(0,\theta)$, that is $z > 0$]. At $\theta = 90^\circ$ the shift is always equal 0, thus in the *nonrelativistic approximation the transversal effect is practically absent*.

The relativistic case is different. In Figure 1 a surface appropriate to the rotation of curve (1) around a vector of relative velocity β is represented. In Figure 2 the polar graphs of axial cross-sections of surfaces (1) for five values of β are

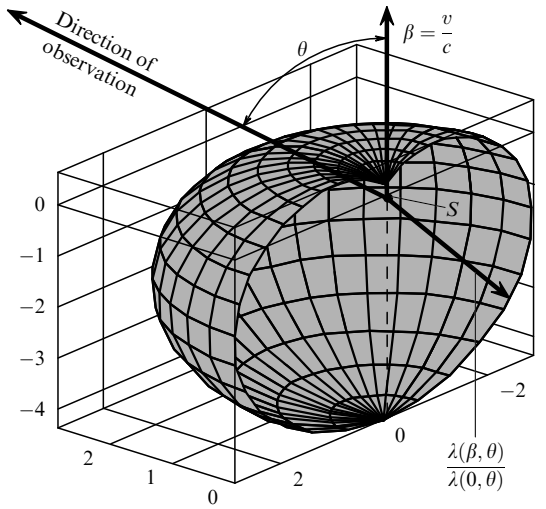

Figure 1. Axial cut of a surface (1) for $\beta = 0.9$.

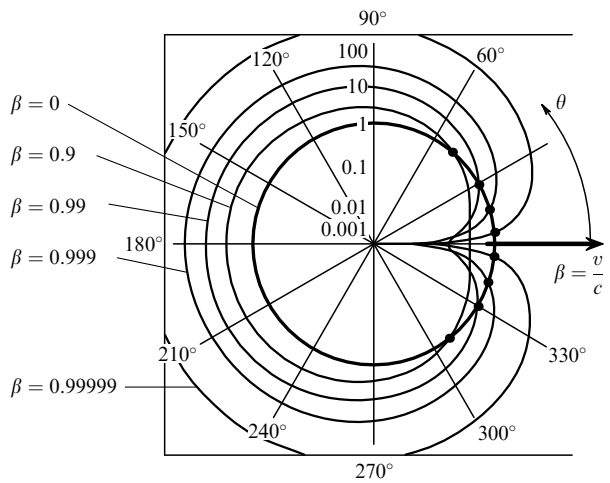

Figure 2. Axial cut of surfaces (1). Formation of a violet crater for various β. The radial scale is logarithmic.

shown. One can see that the surfaces (1) with various β intersect a unit sphere [Eqn (1) at $\beta = 0$] on circles (the cross-points are shown) visible from the origin of the coordinate system (where the source S is placed) for different angles $\theta = \Theta$:

$$\Theta(\beta) = \arccos\left(\frac{1 - \sqrt{1 - \beta^2}}{\beta}\right). \tag{5}$$

These are those directions, for which the Doppler-shift $z = 0$ (Fig. 3). At $\beta \to 1$ $\Theta \to 0$. For directions inside the cone with an angle 2Θ at its top located at the source S and intersecting the surface of a unit sphere on a circle, the shift is violet ($z < 0$), for angles outside of the cone the shift is red ($z > 0$). It is a specific *relativistic effect*. In the nonrelativistic case ($\beta \sim 0$) all surfaces intersect the sphere on very close circles lying near the plane $\theta = 90°$ and the transverse Doppler-effect is practically absent.

In Figure 4 the cross-section of the surface of *shifts* z, appropriate to Eqn (2) is represented. The violet shift has a negative sign, therefore in polar coordinates it is represented

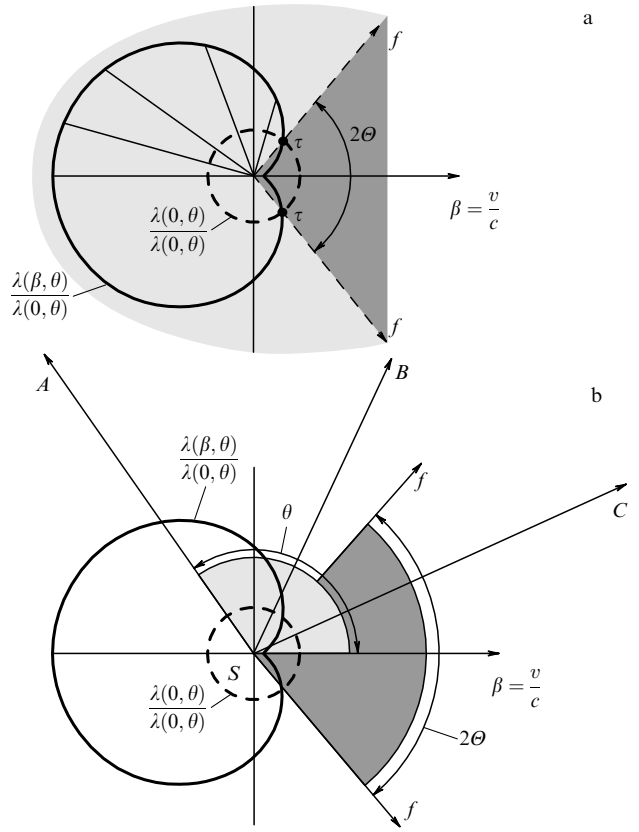

Figure 3. Relativistic Doppler-effect (1), $\beta = 0.9$. (a) Outside the violet cone f–f (2Θ) a red-shift is observed $\lambda(\beta,\theta) > \lambda(0,\theta)$; in the cone f–f a violet-shift is observed $\lambda(\beta,\theta) < \lambda(0,\theta)$. Along the forming surface of the cone f–f, no change in λ is observed. τ–τ is the circumference of intersection of the surfaces $\lambda(\beta,\theta)$ and $\lambda(0,\theta)$. (b) A, B, C are the directions of observation: A — source S recedes, $\lambda(\beta,\theta) > \lambda(0,\theta)$; B — source S approaches, $\lambda(\beta,\theta) > \lambda(0,\theta)$(!); C — source S approaches, $\lambda(\beta,\theta) < \lambda(0,\theta)$.

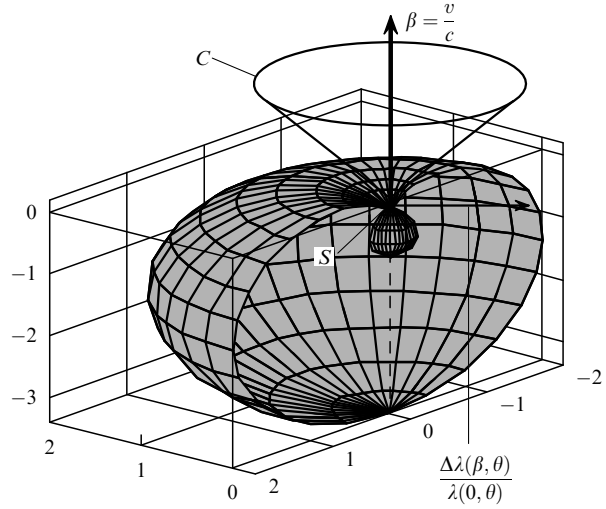

Figure 4. Axial cut of surface (2) of shifts z for $\beta = 0.9$. The cone C with an apex angle 2Θ at the source S, placed at the node of the surface, touches it at this point. Along the forming cone the Doppler shift is not observed ($\Delta\lambda/\lambda = 0$). The exterior part of the surface describes the red shift ($\Delta\lambda/\lambda > 0$), and the interior part the violet ($-1 < \Delta\lambda/\lambda < 0$) shift.

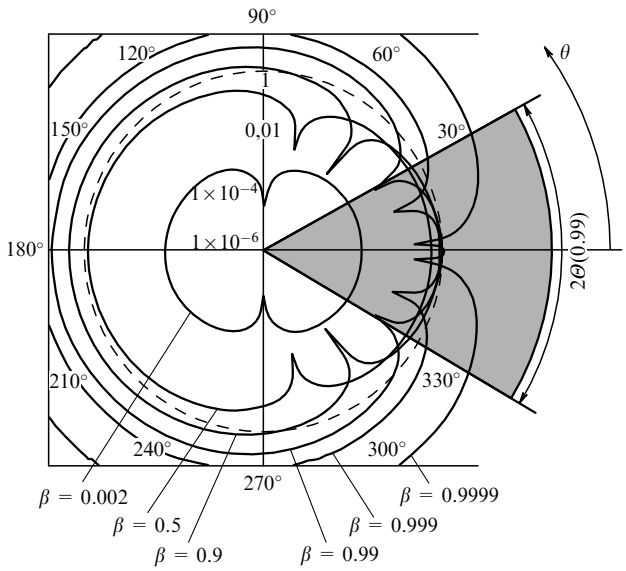

Figure 5. Axial cross-section of surfaces of *modules* (2). One can see the contraction of the angle 2Θ of the violet cone with magnification of β. The radial scale is logarithmic.

by an interior surface. In Figure 5 the graph of *modules* of shifts z for six values of β are shown. At any $\beta \neq 0$ the transverse shift is red. Already it points to the idea, that, if at $\theta = 0$ the shift is *always violet*, but at $\theta = \pi/2$ the shift is *always red*, the passage from violet to red through zero should be somewhere *inside* the interval $0 < \theta < \pi/2$.

Figure 6a demonstrates graphs of the dependences:

$$r(\beta) = \frac{\Delta\lambda(\beta,\pi)}{\lambda(0,\pi)} = \gamma(\beta) - 1 + \beta\gamma(\beta)\,, \tag{6}$$

$$t(\beta) = \frac{\Delta\lambda(\beta,\pi/2)}{\lambda(0,\pi/2)} = \gamma(\beta) - 1\,, \tag{7}$$

$$v(\beta) = \frac{\Delta\lambda(\beta,0)}{\lambda(0,0)} = \gamma(\beta) - 1 - \beta\gamma(\beta)\,, \tag{8}$$

which describe red, transverse and violet shifts accordingly and

$$\lambda(0,\pi) = \lambda\left(0,\frac{\pi}{2}\right) = \lambda(0,0)\,.$$

In Figure 6b the graphs of the dependences of ratios of the transverse Doppler-effect ($\theta = \pi/2$) to red ($\theta = \pi$) and transverse Doppler-effect to violet ($\theta = 0$) are shown:

$$tr(\beta) = \frac{t(\beta)}{r(\beta)} = \frac{\gamma(\beta) - 1}{\gamma(\beta) - 1 + \beta\gamma(\beta)}\,, \tag{9}$$

$$tv(\beta) = \frac{t(\beta)}{v(\beta)} = \frac{\gamma(\beta) - 1}{\gamma(\beta) - 1 - \beta\gamma(\beta)}\,. \tag{10}$$

In spite of the fact that the transverse shift is an effect of second order of smallness, its magnitude with growth of β becomes comparable with longitudinal shifts. In physics and mathematics, cases where the effects of higher order of smallness are comparable or even greater than the effects of lower order, are well known.

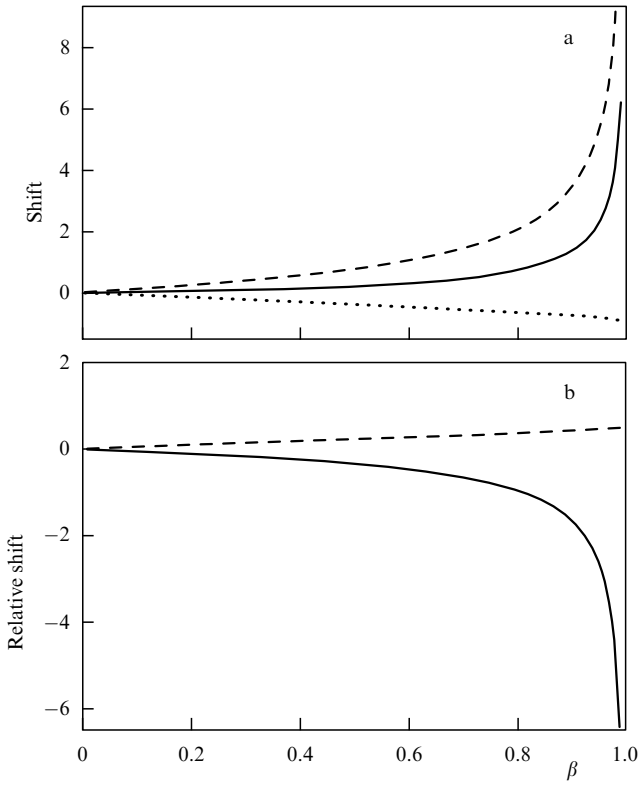

Figure 6. Red $r(\beta)$ (6) (dashed line), transverse $t(\beta)$ (7) (solid line) and violet $v(\beta)$ (8) (dotted) shifts (a) and the dependences $tr(\beta)$ (9) (dashed line) and $tv(\beta)$ (10) (solid line) (b).

For visible spectral lines broadened by the Doppler-effect it is possible to measure the shifts of magnitude

$$\frac{\Delta v}{v} = \frac{\Delta\lambda}{\lambda} \simeq 10^{-7} - 10^{-8}\,,$$

therefore for a transverse shift the minimum measurable velocity is about 100 km s^{-1}, while for a longitudinal one ($\theta = 0$) it is about ± 20 m s^{-1}. From what is said it follows, that, if we observe experimentally:

— a *violet* shift, the source in all cases *is approaching*,

— a *zero* shift, the source is either *motionless*, or *approaching*,

— a *red* shift, the source may be *approaching* (!), or moving *across* the direction of observation, or *moving away*.

As the Doppler-shift z [Eqn (2)] is a function of two variables β and θ, to determine separately β and θ from measurements of Doppler-shifts, it is necessary, as is known, to produce, as a minimum, two measurements in two directions, with a noticeable angle α between them. However, it can happen that the vector β is directed as the bisector of angle α or $(2\pi - \alpha)$ so the system does not have definite solutions, therefore in the general case it is better to take measurements in three directions.

In laboratory conditions, measurements at different angles are usually possible. In astronomy, even with the help of satellites such measurements are impossible because of the negligible sizes of available angles. Therefore, according to the above, measurement in only one direction bears *limited* information (violet or zero shifts — relative approach or relative rest), or *none* (red shift — eliminates relative rest only).

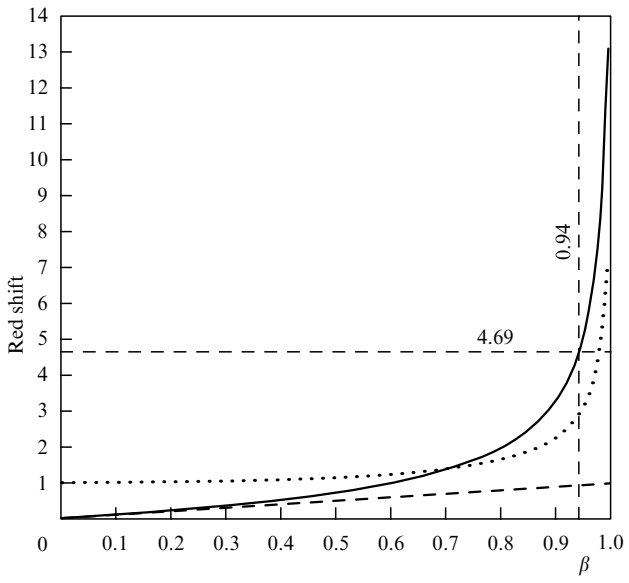

Figure 7. Relativistic (2) (solid line) and nonrelativistic (4) (dashed line) red Doppler-shift ($\theta = \pi$) as a function of the relative recession velocity β. If the red shift was caused *only* by the Doppler-effect, the observable maximum red shift in the spectra of distant galaxies $z = 4.69$ would correspond to a relative velocity $\beta = 0.94$ where $\gamma(0.94) = 2.93$ and $2\Theta(0.94) = 91.005$ degrees.

Table. Relativistic factor $\gamma(\beta)$ (1) and angles $2\Theta(\beta)$, formula (5).

β	$\gamma(\beta)$	$2\Theta(\beta)$, degrees
0.002	1.00	179.88
0.03	1.0004	178.28
0.2	1.02	168.40
0.3	1.05	162.34
0.4	1.09	155.91
0.5	1.15	148.92
0.6	1.25	141.06
0.7	1.40	131.80
0.8	1.67	120.0
0.9	2.29	102.37
0.99	7.09	59.64
0.999	22.37	34.02
0.9999	70.71	19.23
0.99999	223.61	10.83
0.999999	707.11	6.09
0.9999999	2236.07	3.43

3. Conclusions

From formula (1) one can see that in the relativistic case (in contrast to the nonrelativistic) the Doppler-effect is not determined only by the component of a velocity directed towards the observer $\beta\cos\theta$, but also by the velocity β. Therefore for the same $\beta\cos\theta$, but different β and θ either a red shift or a violet shift may be observed.

A few words about the expanding Universe. The presence of a red shift increasing with distance (if it is really caused *only* by the Doppler-effect) is a necessary, but not sufficient condition for the expansion of the Universe.

If the Universe is expanding, for any observer all radiating objects will scatter precisely with $\theta = \pi$ and the observable shift should be red (Fig. 7). But not on the contrary.

For example, for moving of emitters with high speed along a spiral slightly twisted to the *center* a *red* shift would also be observed, if the observer is outside the violet cone.

From the figures shown and the table one can see, that for large β most short-wave radiation goes out from the bottom of the crater as a narrow beam (Fig. 1 and 2). As the wall of the crater rises the wavelength quickly increases. Thus we meet with a possible realization of a narrow-directed short-wave source (for example, x-ray).

Acknowledgements

The author expresses sincere thanks to Academician V L Ginzburg and Doctor B M Bolotovskiĭ for useful discussions and support, and also to all the colleagues of the P N Lebedev Physical Institute, the Institute of General Physics, and Moscow State University, who were involved in discussion of this work.

References

1. Einstein A *Ann. Phys.* **17** 891 (1905); *Sobranie Nauchnykh Trudov* Vol. 1 (Moscow: Nauka, 1965)
2. *Fizicheskiĭ Éntsiklopedicheskiĭ Slovar'* (Physical Encyclopaedia) (Moscow: Sov. Entsiklopediya, 1960)
3. *Fizicheskiĭ Éntsiklopedicheskiĭ Slovar'* (Physical Encyclopaedia) (Moscow: Sov. Entsiklopediya, 1983)
4. Landau L D, Lifshitz E M *Teoriya Polya* (The Classical Theory of Fields) (Moscow: Nauka, 1988) [Translated into English (Oxford: Pergamon Press, 1975)]
5. Pauli W A *Theory of Relativity* (New York: Dover Publ., 1958) [Translated into Russian (Moscow: Nauka, 1983)]
6. Bergmann P G *Introduction to the Theory of Relativity* (New York: Prentice-Hall, Inc., 1942) [Translated into Russian (Moscow: Inostrannaya Literatura, 1947)]