Physics – Uspekhi **40** (3) 305 – 316 (1997)

METHODOLOGICAL NOTES PACS number: 03.65.Bz

Bell's theorem for trichotomic observables

A V Belinskiĭ†

Contents

Abstract. Bell's paradoxes, due to the fundamental properties of light and the nature of the photon, are discussed within a single framework with a view to checking the hypothesis that a stationary, non-negative, joint probability distribution function exists. This hypothesis, related to the local theory of hidden parameters as a possible interpretation of quantum theory, enables experimentally verifiable Bell's inequalities to be formulated. The dependence of these inequalities on the number of observers V is considered. Quantum theory predicts the breakdown of Bell's inequalities in optical experiments. It is shown that as V increases, the requirements on the quantum effectiveness of the detector, η, are reduced from $\eta > 2/3$ at $V = 2$ to $\eta > 1/2$ for $V \to \infty$. Examples of joint probability distribution functions are given for illustrative purposes, and a way to resolve the Greenberger – Horne – Zeilinger (GHZ) paradox is suggested.

1. Introduction

The dramatic development of quantum optics and the experimental successes achieved in recent years prompt the question of the nature of light and its material carriers, photons, which so far remain unexplained. It is firmly established that energy can be carried from one body to another in discrete portions, or 'quanta'. Let a detector be exposed to a source of light (Fig. 1). If the source is of a low intensity and the detector is sufficiently sensitive, then one observes photocurrent pulses at the detector output, which are thought to be connected with photons arriving at the detector.

Figure 1. A light source illuminates a detector. A polarizing analyzer oriented at the angle α or α' is shown by the dashed lines. The propagation channel, for example a vacuum, the analyzer, and the detector form the receiving tract.

Let us ask the question: do the properties of light (properties of photons at the moment of their creation) depend *only* on the state of the source or they can be affected by the state of the receiving tract? To answer this question, one can, for example, change the receiving tract state keeping the source state and then analyze the test results before and after such changes. For example, let us mount an analyzer of the polarization to register photocounts at two rotation angles α and α', and divide the experiment into two series.

Let the observable quantity (for example, the photocount rate) in the first series be R_A and in the second be $R_{A'}$. If the experimental results are described are probabilistically with a non-negative joint probability distribution function of photocounts $P_{AA'}$, then changes in the receiving tract affect *only* the conditions of registration. If this is not so, then changes in the receiving tract are *changing the properties of the light itself*.

† The author is also known by the name A V Belinsky. The name used here is a transliteration under the BSI/ANSI scheme adopted by this journal.

A V Belinskiĭ Physics Department, M V Lomonosov Moscow State University, Vorob'evy Gory, 119899 Moscow, Russia
Tel. (7-095) 143-48 31

Received 30 September 1996
Uspekhi Fizicheskikh Nauk **167** (3) 323 – 335 (1997)
Translated by K A Postnov; edited by L V Semenova

Unfortunately, no simple experiment to realize this program has yet been suggested†. Therefore, following Einstein – Podolsky – Rosen (EPR) [5], Bohm [6], and Bell [7], we shall study paradoxes in the behavior of pairs of quantum particles.

Let us consider an experiment to measure four values A, A', B, B'. Let us assume first that these four values exist simultaneously and can be simultaneously measured. The results of $N \gg 1$ repetitions of such experiment (four values a_i, a'_i, b_i, b'_i, $i = 1, \ldots N$ for each realization) are given in Table 1.

Table 1.

Number	A	A'	B	B'
1	a_1	a'_1	b_1	b'_1
2	a_2	a'_2	b_2	b'_2
...	...	...	...	...
i	a_i	a'_i	b_i	b'_i
...	...	...	...	...
N	a_N	a'_N	b_N	b'_N

We shall try to describe the experimental results by a deterministic theory, so the result of each realization A, A', B, B' is determined by some set of parameters $\{\lambda_i\}$, variable in general, known or unknown. The existence of a set of all possible $\{\lambda_i\}$ allows one to assume the existence of a four dimensional joint probability distribution $P_{AA'BB'}(a, a', b, b')$, which can be calculated using the results of the experiments shown in Table 1. Capital letters stand for observables, random in general, small letters show the values the observables take. Assuming the result (a, a', b, b') has been observed in I of N realizations, the elementary probability is

$$P_{AA'BB'}(a, a', b, b') = \lim_{N\to\infty} \frac{I}{N} \,. \tag{1}$$

Quantum theory gives no receipt for the calculation of the parameters $\{\lambda_i\}$ (that is why they are called hidden), therefore the fact of their existence needs checking. Further, if only one pair of the four observables A, A', B, B' is described by noncommuting operators, the question of the existence of $P_{AA'BB'}(a, a', b, b')$ also arises, since sometimes they take negative values in the direct quantum calculations [8, 9]. Moreover, it is unknown how to measure simultaneously the observables described by noncommuting operators.

The Bell theorem can answer the question about the existence of $\{\lambda_i\}$ and $P_{AA'BB'}(a, a', b, b')$. It suggests concrete experiments, the results of which, according to quantum theory predictions, cannot be written in Table 1 and described by a joint four dimensional probability distribution $P_{AA'BB'}(a, a', b, b')$. The observables A and A' are described by noncommuting operators, as well as B and B', therefore one has to avoid measuring all four observables simultaneously. The experiment is divided into four series: in the first one the pair A and B is measured, in the second A' and B, in the third A and B', and in the fourth A' and B'. The measuring tract needs to be able to switch from one series of measurements to another. The assumption about the source state being independent of that of the measuring tract (the position of the switch) is essential. This assumption is the signature of the local theory.

In each test series, N realizations are registered. As a result, $4N$ pairs of numbers are obtained, i.e. N octuplets of numbers. One may try to write them into Table 1, i.e. reduce them to N quadruplets by arbitrary pair permutations and then ascribe to each string of the Table 1 some set of the hidden variables $\{\lambda_i\}$. Here a question emerges: in the case of the hidden variables' existence, should all the realizations be written into the Table 1? Obviously no, as the realizations in different test series could be due to non identical values $\{\lambda_i\}$. Thus, some realizations have to be rejected. Which ones? For example, those that do not alter the moments. But then instead of writing the experimental results into Table 1, one needs to set certain relationships between the moments measured (see also Ref. [10]), which would follow from the principal possibility of writing the results of experiments into Table 1 in the case of $\{\lambda_i\}$ identity in each test series. Further on, just such relationships are analyzed. If they are violated in an experiment, it cannot be described by $P_{AA'BB'}(a, a', b, b')$, and the necessary condition of the hidden variables existence is assumed to be the fact of the existence of a non-negative joint elementary probability $P_{AA'BB'}(a, a', b, b')$ distribution, since (see Ref. [11])

$$P_{AA'BB'}(a, a', b, b') = \int_{\Lambda(a, a', b, b')} P(\lambda)\, \mathrm{d}\lambda \,, \tag{2}$$

where $\Lambda(a, a', b, b')$ is a subset of the entire set of hidden parameters Λ, which yields the result (a, a', b, b'), and $P(\lambda)$ is the hidden parameters distribution density.

2. The Bell inequalities for two observers.

To consider quantum paradoxes of EPR – Bohm – Bell type, we start with the scheme [12] shown in Fig. 2a, which is also similar to the experiments [13, 14].

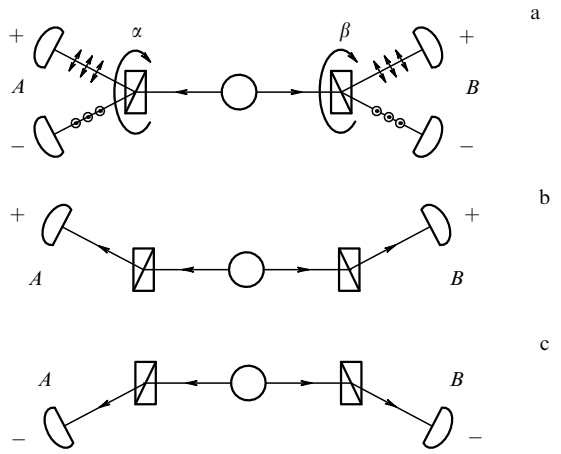

Figure 2. A source emits a pair of photons with correlated polarizations. They are detected by two observers A and B. The measuring tract of each observer includes a polarization prism as an analyzer and two detectors. Angles α and β determine the angular orientation of the analyzers with respect to the x axis, for example. All four detectors in the schemes are assumed to be identical (a). The possible variants of the photon trajectories for $\alpha = \beta$ (under identical photon passage conditions through the analyzers) are shown in (b) and (c).

† Certain hopes here are connected with the negativeness of the Wigner joint probability distribution function (see, for example, Refs [1 – 3]) and the possibility of its measurement [4].

The source emits a pair of photons, which scatter into opposite directions — one toward the observer A, another toward the observer B. Polarizations of the photons are correlated, for example, both photons are polarized in the same plane.

The analyzers in the form of polarization prisms are mounted in front the of detectors, directing the photon into one of the two detectors. All four detectors are assumed to be identical. Two observers A and B register simultaneously one photon each at detectors '+' or '−' (for simplicity, we assume at first the detectors' quantum efficiency $\eta = 1$).

The probability of simultaneous photocounts depend on the analyzers orientation, which is characterized by rotation angles α and β. Consider the case $\alpha = \beta$ (then the conditions for each photon to pass through the analyzer coincide). Repeating the test, observer A registers photocounts at both his detectors. This is also the case for observer B well. It appears that four variants of synchronous trajectories of the pair photons are possible: both fall in the upper '+' detectors (Fig. 2b), both fall in the bottom '−' detectors (Fig. 2c), one photon falls in the '+', the other in the '−', and vice versa. However, *only* the first two variants are observed in the experiment.

If one trys to explain this result by a local deterministic model, it is logical to assume that the behavior of the pair of scattered photons at the analyzers is entirely or partially determined by the source at the moment of photon creation. This predeterminacy could be described by a set of hidden parameters $\{\lambda_i\}$ and a joint probability distribution function $P_{AA'BB'}(a, a', b, b')$. As mentioned above, quantum theory suggests no algorithm for the calculation of $\{\lambda_i\}$, so the attempt to interpret the quantum formalism from the point of view of classical statistical physics is usually referred to as the local theory of hidden parameters or hidden variables. Its adequacy could be checked by the experiment shown schematically in Fig. 2a. The locality here means the assumption that the test results registered by the observer A are independent of the angular orientation β of the observer B's prism, and vice versa (the results B are independent of α).

Let us parameterize the test results as follows. If observer A has registered a photocount at the '+' detector with analyzer orientation angle α, then the discrete random variable $A(\alpha) \equiv A$ is $a = +1$. If this has occurred below the angle α', the quantity $A(\alpha') \equiv A'$ takes a value $a' = +1$. We code similarly the photocounts at the '−' detector (their values are a or $a' = -1$), as well as observer B's photocounts (b or $b' = \pm 1$). Thus, the quantities A, A', B, B' are initially assumed dichotomic: $a, a', b, b' = \pm 1$.

As mentioned above, four test series are performed: in the first one, quantities A and B are measured, in the second, A' and B, in the third, A and B', in the fourth, A' and B'. Then the Bell inequality of Clauser–Horne–Shimony–Holt (CHSH) type [15] holds

$$-1 \leqslant \langle S_2 \rangle \leqslant 1, \tag{3}$$

where the Bell observable (the lower index corresponds to the number of observers V) is

$$S_2 \equiv \frac{1}{2}(AB + A'B + AB' - A'B'). \tag{4}$$

The CHSH inequality (3) can be proved, expanding the moments as [8, 9]

$$\langle AB \rangle = \sum_{a, a', b, b'} abP_{AA'BB'}(a, a', b, b'). \tag{5}$$

Here and below, only the moment for the first test series is given, since the other three are obtained by a simple substitution of unprimed symbols for primed ones, for example

$$\langle A'B \rangle = \sum_{a, a', b, b'} a'bP_{AA'BB'}(a, a', b, b'). \tag{6}$$

Substituting them into inequality (3) and using elementary probability properties

$$0 \leqslant P_{AA'BB'}(a, a', b, b') \leqslant 1, \tag{7}$$

$$\sum_{a, a', b, b'} P_{AA'BB'}(a, a', b, b') = 1, \tag{8}$$

it is easy to prove the correctness of inequality (3).

Another proof is based on the fact that in the case of dichotomic observers $a, a', b, b' = \pm 1$ we have [16–18]

$$\begin{aligned} s_2 &\equiv \frac{1}{2}(ab + a'b + ab' - a'b') \\ &\equiv \frac{1}{2}\left[a(b + b') + a'(b - b')\right] = \pm 1 \end{aligned} \tag{9}$$

and, since

$$\langle S_2 \rangle = \sum_{a, a', b, b'} s_2 P_{AA'BB'}(a, a', b, b'), \tag{10}$$

we obtain inequality (3).

On the other hand, the quantum description of the experiments shown schematically in Fig. 2a, violates inequality (3). Let, for example, correlated photon pairs be created during parametric light scattering in a piezocrystal with quadratic nonlinearity [19]. The simplest four-mode description of such a scattering yields the state vector of a biphoton field in the form (see, for example, Ref. [18] and references therein)

$$|\psi_2\rangle = \frac{1}{\sqrt{2}}\left(|1\rangle_{ax}|0\rangle_{ay}|1\rangle_{bx}|0\rangle_{by} + |0\rangle_{ax}|1\rangle_{ay}|0\rangle_{bx}|1\rangle_{by}\right), \tag{11}$$

where indexes x and y denote mutually orthogonal polarizations.

A characteristic feature of state (11) is its nonfactoring (*entangled state*)†:

$$|\psi_2\rangle \neq |\psi\rangle_a |\psi\rangle_b. \tag{12}$$

The calculation of moments in inequality (3) (see Appendix A) yields

$$\langle AB \rangle_{\psi_2} = \eta^2 \cos 2(\alpha - \beta). \tag{13}$$

For the quantum efficiency of detector $\eta = 1$ and angles

$$\alpha = 0, \quad \alpha' = \frac{\pi}{4}, \quad \beta = \frac{\pi}{8}, \quad \beta' = -\frac{\pi}{8} \tag{14}$$

we arrived at a contradiction to (3): $\sqrt{2} \nleqslant 1$.

† The reader not well acquainted with quantum formalism can skip these relationships without loss of understanding.

In experiments [12] etc., a break of the CHSH inequality has been registered, which is considered as the denial of the hidden variables theory. This conclusion has been argued in Refs [20–27], among others. The point is that to remove the influence of η in these experiments, only double coincidence photocounts were taken into account, which are singled out by the coincidence scheme, and the moments have actually been calculated as

$$\langle AB\rangle_M = \frac{1}{M_{AB}} \sum_{i=1}^{M_{AB}} a_i b_i \,, \tag{15}$$

where $M_{AB} \gg 1$ is the number of double coincidence photocounts in the test series. Thus, the number of realizations used for averaging is taken here to be equal to that of pair coincidences M_{AB}. According to Eqn (15), we have

$$\langle |AB|\rangle_M = 1 \,. \tag{16}$$

Substituting Eqn (16) into the CHSH inequality (3) yields

$$\left|\langle AB\rangle_M + \langle A'B\rangle_M + \langle AB'\rangle_M - \langle A'B'\rangle_M\right| \leqslant 2\langle |AB|\rangle_M \,. \tag{17}$$

This inequality is valid only for dichotomic observables $(a, a', b, b' = \pm 1)$. However, in reality the detectors are not ideal so their efficiency is always less than unity. Therefore, the observables A, A', B, B' sometimes vanish, i.e. $a, a', b, b' = 0, \pm 1$. Inequality (17) then breaks down due to the violation of a numerical inequality

$$|ab + a'b + ab' - a'b'| \leqslant 2|ab| \,, \tag{18}$$

for example, for $a = 0$, $a' \neq 0$, and $b' \neq 0$. Thus, the averaging rule (15) for trichotomic observables is wrong.

We illustrate this using a specific model example constructed for the trichotomic observables A, A', B, B' with a non-negative four dimensional joint probability distribution $P_{AA'BB'}(a, a', b, b')$, which we shall denote further simply by $(aa'bb')$ for brevity: for example, $P_{AA'BB'}(a = +1,\ a' = 0,\ b = -1, b' = -1) \equiv (+0--)$.

As noted above, the possibility of an experiment description with a non-negative four dimensional joint probability distribution assumes the simultaneous existence of observables described by noncommuting operators (for example, A and A'), i.e. their *a priori* existence is assumed before the measurement, which agrees with the theory of the hidden variables.

Let us take the elementary probabilities

$$\begin{aligned}
(+++0) &= (---0) = (+0++) = (-0--) \\
&= (0++-) = (0--+) = (+-0+) \\
&= (-+0-) = \frac{w}{8} \,, \\
(++++) &= (+--+) = (-++-) = (----) \\
&= (+++-) = (---+) = (+-++) \\
&= (-+--) = \frac{1-w}{8}
\end{aligned} \tag{19}$$

and the others $(aa'bb') = 0$. The value of the parameter w here can fall within the range from 0 to 1.

According to Eqns (5), (19)

$$\langle AB\rangle = \frac{1}{2} \,, \tag{20}$$

and inequality (3) is not violated. However the moment

$$\langle |AB|\rangle = 1 - \frac{w}{2} \tag{21}$$

at $w \neq 0$ differs from Eqn (16). Therefore, rule (15) contradicts Eqn (5) and its usage can lead to the violation of inequality (3). Indeed, if only pair relationships are taken into account, then

$$\langle AB\rangle_M = \frac{\langle AB\rangle}{\langle |AB|\rangle} \tag{22}$$

and, using Eqns (19), we have

$$\frac{\langle AB\rangle}{\langle |AB|\rangle} = \frac{\langle A'B\rangle}{\langle |A'B|\rangle} = \frac{\langle AB'\rangle}{\langle |AB'|\rangle} = -\frac{\langle A'B'\rangle}{\langle |A'B'|\rangle} = \frac{1}{2-w} \,. \tag{23}$$

The variation of the parameter w from 0 to 1 corresponds to changing relationships (23) from 1/2 to 1. In particular, at $w = 2 - \sqrt{2}$ they are equal to $\sqrt{2}/2$ and coincide with the ratio of moment (13) to moment (26) (see below) at angles (14). Therefore, inequality (3) breaks as well, as quantum theory predicts.

Thus the registration of coincidence photocounts only does not allow one to find a difference between the predictions of quantum theory and the local theory of hidden variables. On the other hand, according to relationships (19) and (31) (see below)

$$\langle |A|\rangle = \langle |A'|\rangle = \langle |B|\rangle = \langle |B'|\rangle = 1 - \frac{w}{4} \,, \tag{24}$$

i.e. when $w > 0$ the inequality $\langle |A|\rangle > \langle |AB|\rangle$ holds, for example, at $w = 2 - \sqrt{2}$ we have

$$\frac{\langle |AB|\rangle}{\langle |A|\rangle} \equiv \frac{2(2-w)}{4-w} = 2(\sqrt{2} - 1) \approx 0.83 \,, \tag{25}$$

which gives us a hope to establish experimental differences model (19) and quantum theory predictions, since in between the state (11) (see Appendix A)

$$\langle |AB|\rangle_{\psi_2} = \eta^2 \,, \tag{26}$$

$$\langle |A|\rangle_{\psi_2} = \eta \,. \tag{27}$$

To find such differences, we introduce into the Bell inequalities the mean numbers of single events (single photocounts in the present case) [23]:

$$2|\langle S_2\rangle| \leqslant \langle |A|\rangle + \langle |A'|\rangle + \langle |B|\rangle + \langle |B'|\rangle - \langle |AB|\rangle - \langle |A'B'|\rangle, \tag{28}$$

or, in a more compact form,

$$|\langle S_2\rangle| \leqslant \frac{1}{2}\left[\langle N_{AB}\rangle + \langle N_{A'B'}\rangle\right], \tag{29}$$

where $N_{AB} \equiv |A| + |B| - |AB|$. The quantity $N_{AB} = 1$, if a and b differ from zero simultaneously ($a = b = 0$ would correspond to the absence of an event). Thus $\sum_i N_{AB}$ is the number of realizations in a test series, which includes both double and single photocounts.

Another variant of the inequality is:

$$4|\langle S_2\rangle| \leqslant 2\langle N_1\rangle + \langle N_2\rangle, \tag{30}$$

where $N_1 \equiv |A| + |A'| + |B| + |B'|$, and $N_2 \equiv |AB| + |A'B| + |AB'| + |A'B'|$.

These inequalities are derived assuming the existence of a non-negative four dimensional joint probability distribution. It is easy to check the correctness of relations (28), (30) by substituting into them the moments written as

$$\langle A\rangle = \sum_{a,a',b,b'} aP_{AA'BB'}(a,a',b,b'),$$
$$\langle AB\rangle = \sum_{a,a',b,b'} abP_{AA'BB'}(a,a',b,b'), \tag{31}$$

and for other moments analogously.

One can also prove inequality (28) using the numerical inequality

$$-(|a|+|a'|+|b|+|b'|-|ab|-|a'b'|) \leqslant 2s_2$$
$$\leqslant |a|+|a'|+|b|+|b'|-|ab|-|a'b'|. \tag{32}$$

To prove it, consider first the case $|a|=|a'|=|b|=|b'|=1$. Here, according to Eqn (9), $s_2=\pm 1$ and inequality (32) is met. Then, setting $a=0$ we obtain the inequality $|a'(b-b')| \leqslant |b|+|b'|+|a'|(1-|b'|)$, which is satisfied by $|a'(b-b')| \leqslant |b|+|b'|$. Similarly for a', b, or $b'=0$. Inequality (28) then follows from expressions (7), (10), (32).

Let us formulate inequality (29) in terms of count rates. Let us assume count rates at the detectors to be the same in different test series, which usually takes place in experiments with identical detectors:

$$R_1 \equiv R_{|A|} = R_{|A'|} = R_{|B|} = R_{|B'|},$$
$$R_{|A|} \equiv R_A(+) + R_A(-), \tag{33}$$

where $R_A(+)$ and $R_A(-)$ are the count rates at detectors $A+$ and $A-$, respectively;

$$R_2 \equiv R_{|AB|} = R_{|A'B|} = R_{|AB'|} = R_{|A'B'|}, \tag{34}$$

$$R_{|AB|} = R_{AB}(++) + R_{AB}(--) + R_{AB}(+-) + R_{AB}(-+), \tag{35}$$

where $R_{AB}(a,b)$ is the rate of double counts.

Since

$$\langle |A|\rangle \propto R_1, \tag{36}$$

$$\langle AB\rangle \propto R_{AB} \equiv R_{AB}(++) + R_{AB}(--) - R_{AB}(+-) - R_{AB}(-+), \tag{37}$$

$$\langle |AB|\rangle \propto R_2, \tag{38}$$

we obtain an inequality convenient to test experimentally:

$$|R_{AB} + R_{A'B} + R_{AB'} - R_{A'B'}| \leqslant 2(2R_1 - R_2). \tag{39}$$

It can be reduced to the CHSH inequality (3) by dividing the both sides by $2R_1 - R_2$. Here the moments are to be determined as

$$\langle AB\rangle_N = \frac{R_{AB}(++) + R_{AB}(--) - R_{AB}(+-) - R_{AB}(-+)}{2R_1 - R_2}. \tag{40}$$

Thus, the difference of inequality (29) from (3) can be reduced to the difference in the averaging procedures. If, instead of rule (15), the averaging is made over the total number of realizations in a test series

$$N = \sum_i N_{AB} = \sum_i N_{AB'} = \sum_i N_{A'B} = \sum_i N_{A'B'} \gg 1, \tag{41}$$

which includes both double and single photocounts, then

$$\langle AB\rangle_N = \frac{1}{N}\sum_{i=1}^{M_{AB}} a_i b_i, \tag{42}$$

and the CHSH inequality (3) reduces to inequality (29).

Condition (41) formally means that the same number of realizations (N) is performed in each test series, however in terms of count rates it is sufficient that inequalities (33), (34) are met, instead of equalities (41).

According to Eqns (13), (26), (27), the four-modes quantum model predicts

$$\langle AB\rangle_N = \frac{\langle AB\rangle_{\psi_2}}{\langle N_{AB}\rangle_{\psi_2}} = \frac{\eta\cos 2(\alpha-\beta)}{2-\eta}. \tag{43}$$

Provided that Eqn (14) holds, substituting Eqn (43) into inequality (3) yields an inequality that contains η and is violated at

$$\eta > 2(\sqrt{2}-1) \approx 0.83 \tag{44}$$

in the absence of false photocounts. A similar result is obtained in Refs [20–27].

In real experiments, it is impossible to obtain the value of the ratio (23) exactly equal to $\sqrt{2}/2$ due to the accidental coincidence of photocounts from different photon pairs (see, for example, Ref. [18]). Reducing w in Eqn (23) may account for this factor, which leads to more stringent requirements on the detectors efficiency, which is necessary to discover violations of inequalities (28)–(30).

Now we consider the Bell inequality of Clauser–Horne (CH) type [28]

$$P_{AB}(a,b) + P_{A'B}(a',b) + P_{AB'}(a,b') - P_{A'B'}(a',b')$$
$$\leqslant P_A(a) + P_B(b), \tag{45}$$

the derivation of which is also connected with the allowance of the existence of a non-negative four dimensional joint probability distribution (see Appendix B). Analogous inequalities have been analyzed in Refs [20–27], among others.

The experimental testing of inequality (45) can be done as follows. In the scheme from Fig. 2a, let us consider triggering of the '+' detectors only . Then

$$R_{AB}(++) + R_{A'B}(++) + R_{AB'}(++) - R_{A'B'}(++)$$
$$\leqslant R_A(+) + R_B(+). \tag{46}$$

The trichotomicity of observables in the CH type inequalities is not required — their dichotomicity $a,a',b,b'=0,+1$ is sufficient.

Quantum theory predicts (see Appendix A)

$$P_A(+) = P_B(+) = \frac{\eta}{2}, \quad P_{AB}(++) = \frac{\eta^2}{2}\cos^2(\alpha-\beta). \tag{47}$$

Substituting the values of angles (14) into Eqns (47) and then into inequality (45) we arrived at an inequality that, similar to (28)–(30), is violated at $\eta > 0.83$. However, while the maximal violation in (28)–(30) is about 41%, in the present case it turns out to be two times smaller, about 20%. The condition $\eta > 0.83$, obtained from the analysis of inequalities (28)–(30) and (45), is consistent with the model bound (25), i.e. the probabilistic model (19) yields the limitingly possible value of the ratio $\langle |AB|\rangle / \langle |A|\rangle$ in the case of

quantum state (11). In this sense the distribution (19) is optimal.

The absence of false triggerings and the condition $\eta > 0.83$ are stringent enough constraints on the detectors. A decrease in the efficiency η required can be achieved by increasing the number of observers or by using suggestions from papers [22, 29] to form, instead of state (11), a more general state

$$|\tilde{\psi}_2\rangle = \mu|1\rangle_{ax}|0\rangle_{ay}|1\rangle_{bx}|0\rangle_{by} + \nu|0\rangle_{ax}|1\rangle_{ay}|0\rangle_{bx}|1\rangle_{by}, \quad (48)$$

where coefficients μ and ν, which meet the normalization condition $|\mu|^2 + |\nu|^2 = 1$, can be set real for simplicity.

The physical meaning of the difference between state (48) and (11) is as follows. In state (11), the x- and y-polarizations of photons are equally probable from one realization to another (from one photon pair to another). In state (48), there is a preferential photon polarization plane. For example, this is y-polarization for $|\mu| < |\nu|$.

It is possible to form state (48) and to carry out an experiment using the scheme shown in Fig. 3. The inequality $|\mu| < |\nu|$ is met due to an unequal pumping distribution between the piezocrystals. The quantum calculation of this scheme yields (see Appendix A):

$$P_A = \eta(\mu^2 \cos^2\alpha + \nu^2 \sin^2\alpha), \quad (49)$$

$$P_B = \eta(\mu^2 \cos^2\beta + \nu^2 \sin^2\beta), \quad (50)$$

$$P_{AB} = \eta^2(\mu\cos\alpha\cos\beta + \nu\sin\alpha\sin\beta)^2. \quad (51)$$

Let us substitute them into inequality (45) after having written it in the form

$$\eta \leqslant \frac{P_A^{(1)} + P_B^{(1)}}{P_{AB}^{(1)} + P_{A'B}^{(1)} + P_{AB'}^{(1)} - P_{A'B'}^{(1)}}, \quad (52)$$

where $P^{(1)} = P$ when $\eta = 1$.

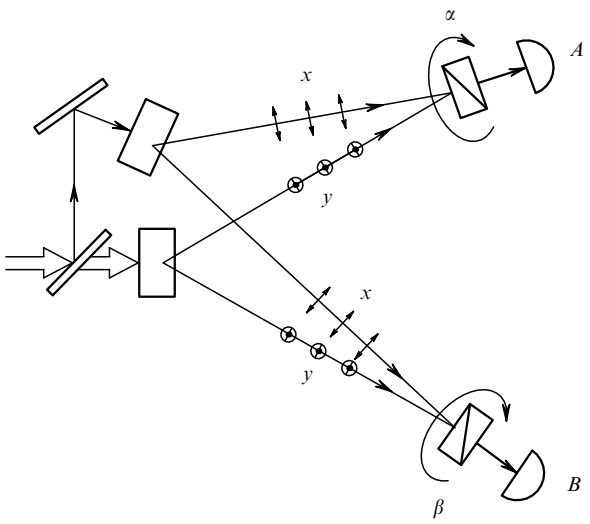

Figure 3. The experimental scheme to test the Bell CH-inequality. A pumping (to the left) is devided by the beam-splitter into two beams of different intensity and illuminates two piezocrystals. In the crystals, a noncollinear parametric scattering of the pumping occurs with correlated photon pair creation. One photon of the pair travels toward observer A, the other toward B. The photons from the different crystals are plane-polarized in mutually perpendicular directions (x and y). They are mixed at the analyzer and detected. α and β are the analyzers rotation angles. The conditions of photon passage through the analyzers are identical.

We wish to find a minimal non-negative value of the right-hand side of inequality (52). Let $P_A^{(1)} = P_B^{(1)} + \Delta$, $\Delta \geqslant 0$. By a correspondence condition similar to Eqn (107) (see Appendix B), we have $P_{AB}^{(1)} \leqslant P_B^{(1)}$, $P_{A'B}^{(1)} \leqslant P_B^{(1)}$, $P_{AB'}^{(1)} \leqslant P_A^{(1)}$, hence

$$\frac{P_A^{(1)} + P_B^{(1)}}{P_{AB}^{(1)} + P_{A'B}^{(1)} + P_{AB'}^{(1)} - P_{A'B'}^{(1)}} \geqslant \frac{2P_B^{(1)} + \Delta}{3P_B^{(1)} + \Delta} \geqslant \frac{2}{3}. \quad (53)$$

Indeed, at $\mu/\nu = 0.001$, $\alpha = \beta = 0$, $\alpha' = -\beta' = 1.8°$, according to Eqns (49)–(52), we have $\eta \leqslant 0.667$. Thus, the violation of inequality (45) can happen at $\eta > 2/3$. A similar result is obtained in Refs [22, 27, 29]. However, the photocount rate in such a configuration proves to be significantly lower than at $\mu/\nu = 1$, which can lead to additional complications connected with false photocounts (dark current) suppression (see Refs [21, 22, 29] for more detail).

We recall that the count rates $R_A \propto P_A$, $R_B \propto P_B$, $R_{AB} \propto P_{AB}$. For example, for the parameter values given above, according to Eqns (49)–(51), we have $R_A = R_B \propto \eta$, $R_{AB} \approx R_{A'B} \approx R_{AB'} \propto \eta^2$, $R_{A'B'} = 0$. At $\eta = 2/3$ such a result is produced by the following elementary probabilities:

$$(+++0) = (+0++) = (0++0) = (+00+) = \frac{1}{4} \quad (54)$$

and the other $(aa'bb') = 0$.

It is easy to check that

$$\frac{P_{AB}(++)}{P_A(+)} = \frac{P_{AB}(++)}{P_B(+)} = \frac{P_{A'B}(++)}{P_B(+)} = \frac{P_{AB'}(++)}{P_A(+)} = \frac{2}{3},$$

i.e. the rate of single photocounts in the first three test series exceeds that of the pair photocounts by 1/3†. At $\eta > 2/3$ one cannot suggest such a four dimensional elementary probability distribution that would describe the quantum calculation result.

What is the physical meaning of the probabilistic model (54)? In the first series of the experiment shown in Fig. 3 (when A and B are measured at $\alpha = \beta = 0$), the emission of the upper crystal *only* is measured. Therefore, when registering a photocount by one of the observers, the other photon of the pair is not detected by the other observer with a probability of 1/3, as if disappearing in the vacuum or detectors‡. This effect, if real, may be an explanation for the zero vacuum fluctuation. However, the lack of restrictions of some kind on the maximal efficiency of detectors in quantum theory seems to be suspicious. These considerations justify the interest in looking for an adequate interpretation of the quantum formalism and its relation with classical statistical physics.

Further on, in the successive three series of the experiment, the losses of the upper crystal emission are negligible. It might appear that the double coincidence count rate cannot decrease, however, in the fourth series of the experiment (when A' ad B' are measured at $\alpha' = -\beta' = 1.8°$), the double coincidence counts turn out to be suppressed by the emission of the bottom crystal ($P_{A'B'}(++) \propto R_{A'B'} = 0$). Such a light-by-light handling is typical for the interference.

† However, $P_{A'B}(++)/P_{A'}(+) = P_{AB'}(++)/P_{B'}(+) = 1$.

‡ With an increase of the number of observers V this probability can increase up to 1/2 according to Eqn (91) (see below).

3. The Bell inequality for three observers

Consider Fig. 4 [16, 18]. Two parametric sources emit photon triplets. One may apparently use a nonlinear light transformation in a transparent medium with cubic nonlinearity [30]. Let us assume that the first source emits photons with polarization x, and the second with polarization y. The triphoton field state then is an entangled state:

$$|\psi_3\rangle = \frac{1}{\sqrt{2}}(|1\rangle_{ax}|0\rangle_{ay}|1\rangle_{bx}|0\rangle_{by}|1\rangle_{cx}|0\rangle_{cy} + |0\rangle_{ax}|1\rangle_{ay}|0\rangle_{bx}|1\rangle_{by}|0\rangle_{cx}|1\rangle_{cy}), \quad (55)$$

$$|\psi_3\rangle \neq |\psi\rangle_a|\psi\rangle_b|\psi\rangle_c .$$

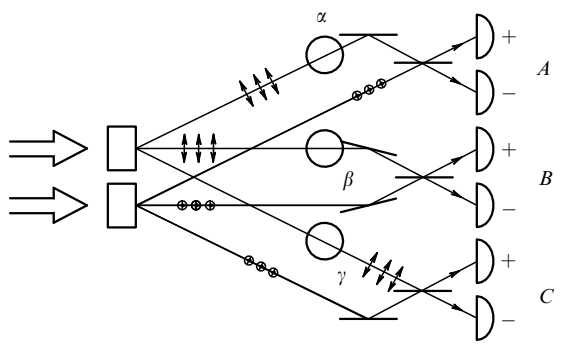

Figure 4. The intensity interferometer scheme for three observers. Correlated triplets of photons are created simultaneously in one of the nonlinear elements (rectangles) by the pumping, which is split into two beams in advance. Two radiation modes, one of which is phase-delayed (circles), reach each of the observers A, B, and C. These modes are mixed at 50% beam-splitters and are detected. At $\varphi = \alpha + \beta + \gamma = 0$ all three photons travel synchronously either upward (toward the '+' detectors), or one upward and two downward (toward the '−' detectors). At $\varphi = \pi$ one or three photons travel downward.

Adjusted phase delays α, β, and γ are introduced into the channels. Then three 50% beam splitters (or polarization prisms turned 45° with respect to the x and y axes) and six photon counters are mounted.

Let us bound the results of the experiment by an inequality of the trichotomic observables $a, a', b, b', c, c' = 0, \pm 1$:

$$4|\langle S_3\rangle| \leqslant \langle N_2\rangle - \langle N_3\rangle, \quad (56)$$

where the Bell observable S_3 is derived from the relationship [16–18]

$$S_3 \equiv \frac{1}{2}\left[S_2(C + C') + S_2'(C - C')\right] \equiv \frac{1}{2}(A'BC + AB'C + ABC' - A'B'C'), \quad (57)$$

in which S_2' differs from S_2 in changing all the primed symbols for unprimed ones, and vice versa: $S_2' \equiv (A'B' + AB' + A'B - AB)/2$; $N_2 = |AB| + |A'B| + |AB'| + |A'B'| + |AC| + |A'C| + |AC'| + |A'C'| + |BC| + |B'C| + |BC'| + |B'C'|$ is the sum of all possible combinations of double photocounts, $N_3 = |ABC| + |A'BC| + |AB'C| + |ABC'| + |A'B'C| + |A'BC'| + |AB'C'| + |A'B'C'|$ is the same of triple photocounts.

The proof of inequality (56) is given in Appendix C. Its experimental testing includes the following program. Four test series are performed: in the first one, A', B, and C are measured, in the second A, B', and C, in the third A, B, and C', and finally in the fourth A', B', and C'.

Let us assume the rates of double photocounts to be the same:

$$R_2 \equiv R_{|AB|} = R_{|A'B|} = \ldots = R_{|B'C'|}. \quad (58)$$

Let the rates of triple photocounts are also the same:

$$R_3 \equiv R_{|ABC|} = R_{|A'BC|} \ldots = R_{|A'B'C'|}, \quad (59)$$

where

$$R_{|ABC|} \equiv R_{ABC}(+++) + \ldots + R_{ABC}(---) = \sum_{a,b,c=\pm} R_{ABC}(a,b,c). \quad (60)$$

Then inequality (56) can be recast into the form

$$|R_{A'BC} + R_{AB'C} + R_{ABC'} - R_{A'B'C'}| \leqslant 2(3R_2 - 2R_3), \quad (61)$$

where

$$R_{A'BC} \equiv R_{A'BC}(+++) - \ldots - R_{A'BC}(---) = \sum_{a',b,c} a'bcR_{A'BC}(a',b,c). \quad (62)$$

Quantum theory predicts that

$$\langle ABC\rangle_{\psi_3} = \eta^3 \cos\varphi, \quad \varphi \equiv \alpha + \beta + \gamma, \quad (63)$$

$$\langle |ABC|\rangle_{\psi_3} = \langle |A'BC|\rangle_{\psi_3} = \langle |AB'C|\rangle_{\psi_3} = \ldots = \langle |A'B'C'|\rangle_{\psi_3} = \eta^3, \quad (64)$$

$$\langle |AB|\rangle_{\psi_3} = \langle |A'B|\rangle_{\psi_3} = \ldots = \langle |B'C'|\rangle_{\psi_3} = \eta^2. \quad (65)$$

These relationships can be obtained by the corresponding summation of joint probabilities [18]

$$P_{ABC}(a,b,c) = \eta^3\langle n_a n_b n_c\rangle_{\psi_3} = \frac{\eta^3}{4}\cos^2\left(\frac{\varphi}{2}\right), \quad abc = +1, \quad (66)$$

$$P_{ABC}(a,b,c) = \eta^3\langle n_a n_b n_c\rangle_{\psi_3} = \frac{\eta^3}{4}\sin^2\left(\frac{\varphi}{2}\right), \quad abc = -1. \quad (67)$$

Here the same notations as in Appendix A are used. A shorter derivation of Eqn (63) is given in Ref. [18]. Here the observables A, B, and C are described by expressions similar to Eqn (104) (see Appendix A):

$$A \equiv \eta(n_{a+} - n_{a-}) = \eta\left[a_x a_y^+ \exp(-\mathrm{i}\alpha) + \mathrm{H.c.}\right], \quad (68)$$

$$B \equiv \eta(n_{b+} - n_{b-}) = \eta\left[b_x b_y^+ \exp(-\mathrm{i}\beta) + \mathrm{H.c.}\right], \quad (69)$$

$$C \equiv \eta(n_{c+} - n_{c-}) = \eta\left[c_x c_y^+ \exp(-\mathrm{i}\gamma) + \mathrm{H.c.}\right], \quad (70)$$

where H.c. stands for a Hermitian-conjugated operator.

The action of these operators on the vector of state (55) is described by an expression like

$$A|\psi_3\rangle = \frac{\eta}{\sqrt{2}}\left[a_y^+ b_x^+ c_x^+ \exp(-\mathrm{i}\alpha) + a_x^+ b_y^+ c_y^+ \exp(\mathrm{i}\alpha)\right]|0\rangle, \quad (71)$$

where $|0\rangle$ denotes the vacuum state of all six modes. Similarly for B and C. It is also easy to calculate

$$ABC|\psi_3\rangle = \frac{\eta^3}{\sqrt{2}}\left[\exp(\mathrm{i}\varphi)|1\rangle_{ax}|0\rangle_{ay}|1\rangle_{bx}|0\rangle_{by}|1\rangle_{cx}|0\rangle_{cy} + \exp(-\mathrm{i}\varphi)|0\rangle_{ax}|1\rangle_{ay}|0\rangle_{bx}|1\rangle_{by}|0\rangle_{cx}|1\rangle_{cy}\right], \quad (72)$$

hence Eqn (63).

Now let us set the following phase delays:

$$\alpha = -\frac{\pi}{2}, \quad \alpha' = \pi, \quad \beta = -\frac{\pi}{2},$$
$$\beta' = \pi, \quad \gamma = -\frac{\pi}{2}, \quad \gamma' = \pi, \quad (73)$$

at which $\cos(\alpha' + \beta + \gamma) = \cos(\alpha + \beta' + \gamma) = \cos(\alpha + \beta + \gamma') = -\cos(\alpha' + \beta' + \gamma') = 1$, and the Bell observable S_3 takes the maximum possible value. In addition, the total correlation of results must be observed, since according to Eqns (63), (64)

$$\frac{\langle A'BC\rangle_{\psi_3}}{\langle|A'BC|\rangle_{\psi_3}} = \frac{\langle AB'C\rangle_{\psi_3}}{\langle|AB'C|\rangle_{\psi_3}} = \frac{\langle ABC'\rangle_{\psi_3}}{\langle|ABC'|\rangle_{\psi_3}} = -\frac{\langle A'B'C'\rangle_{\psi_3}}{\langle|A'B'C'|\rangle_{\psi_3}} = 1. \quad (74)$$

This result can be explained by a model admitting the existence of a non-negative six dimensional probability distribution for trichotomic observables, which is described in Appendix D. A contradiction by this model of quantum theory predictions can be discovered in the violation of inequality (56) or (61). The necessary condition for such a violation, according to Eqns (63–65) and (73), is

$$\eta > \frac{3}{4}. \quad (75)$$

This requirement on the efficiency of detectors, which follows from inequality (56) or (61), is consistent with the model constraint (119) (see Appendix D below).

4. The Bell inequality for four or more observers

Let us return to the scheme in Fig. 4. If the sources are parametric converters on piezocrystals with quadratic nonlinearity, they emit not only pairs but quadruplets of photons as well, i.e. in addition to state (11), there is a mixture of state [31]

$$|\psi_4\rangle = \frac{1}{\sqrt{2}}(|1\rangle_{ax}|0\rangle_{ay}|1\rangle_{bx}|0\rangle_{by}|1\rangle_{cx}|0\rangle_{cy}|1\rangle_{dx}|0\rangle_{dy} + |0\rangle_{ax}|1\rangle_{ay}|0\rangle_{bx}|1\rangle_{by}|0\rangle_{cx}|1\rangle_{cy}|0\rangle_{dx}|1\rangle_{dy}), \quad (76)$$

which is also an entangled state:

$$|\psi_4\rangle \neq |\psi\rangle_a|\psi\rangle_b|\psi\rangle_c|\psi\rangle_d. \quad (77)$$

Let us add into the scheme a measuring channel of the fourth observer D. The phase delay of the latter is δ (or δ'). Let us bound the results of the experiments by an inequality

$$16|\langle S_4\rangle| \leqslant 2\langle N_3\rangle - 3\langle N_4\rangle. \quad (78)$$

Here the Bell observable S_4 is determined from the relationship [17, 18]

$$S_4 \equiv \frac{1}{2}\left[S_3(D + D') + S_3'(D - D')\right]$$
$$\equiv \frac{1}{4}\left[-ABCD + 4(A'BCD) + 6(A'B'CD) - 4(A'B'C'D) - A'B'C'D'\right], \quad (79)$$

where $K(A'BCD) \equiv A'BCD + AB'CD + ABC'D + ABCD'$ in the symbolic form means the sum of K unidentified permutations of primes over the quantities contained in parentheses, and $N_3 = |ABC| + |3(A'BC)| + |3(A'B'C)| + |A'B'C'| + \ldots + |BCD| + |3(B'CD)| + |3(B'C'D')| + |B'C'D'|$ is the sum of all possible combinations of triple photocounts, and $N_4 = |ABCD| + |4(A'BCD)| + |6(A'B'CD)| + |4(A'B'C'D)| + |A'B'C'D'|$ is the same of quadruple photocounts.

The proof of inequality (78) is analogous to that of inequality (56). The experiment to test it may include as much as 16 series (in accordance with the number of terms in S_4). The moments measured then can be reduced to count rates, similar to the case considered in Section 3.

Quantum theory predicts that

$$\langle ABCD\rangle_{\psi_4} = \eta^4 \cos\varphi, \quad \varphi = \alpha + \beta + \gamma + \delta, \quad (80)$$

$$\langle|ABCD|\rangle_{\psi_4} = \langle|A'BCD|\rangle_{\psi_4} = \ldots = \langle|A'B'C'D'|\rangle_{\psi_4} = \eta^4, \quad (81)$$

$$\langle|ABC|\rangle_{\psi_4} = \langle|A'BC|\rangle_{\psi_4} = \ldots = \langle|B'C'D'|\rangle_{\psi_4} = \eta^3. \quad (82)$$

These relationships are derived in a way similar to Eqns (63)–(65).

Let the phase delays meet the conditions

$$\alpha - \alpha' = \beta - \beta' = \gamma - \gamma' = \delta - \delta' = \frac{\pi}{2}, \quad (83)$$

$$\alpha + \beta + \gamma + \delta = \frac{3\pi}{4}, \quad (84)$$

at which all 16 terms S_4 are equal to $\eta^4\sqrt{2}/2$. In this case $\langle|S_4|\rangle$ takes the maximum possible value. Here the necessary condition to violate inequality (78) reads

$$\eta > 4(3 - 2\sqrt{2}) \approx 0.69. \quad (85)$$

Some softening of this requirement and a comparative simplification of the experimental procedure (a twofold decrease of the number of test series) can be realized by updating inequality (78) as follows:

$$16|\langle\tilde{S}_4\rangle| \leqslant \langle N_3\rangle - \langle N_4\rangle. \quad (86)$$

The modified Bell observable $\widetilde{S}_4$ is determined here as

$$\widetilde{S}_4 \equiv \frac{1}{2}[S_3 D' + S_3' D]$$
$$\equiv \frac{1}{4}[-ABCD + 6(A'B'CD) - A'B'C'D']. \quad (87)$$

Let us set the following phase delays

$$\alpha = \beta = \gamma = \delta = 0, \quad \alpha' = \beta' = \gamma' = \delta' = \frac{\pi}{2}, \quad (88)$$

at which the full correlation of results should be observed, since, according to Eqns (80), (81)

$$\frac{\langle ABCD\rangle_{\psi_4}}{\langle|ABCD|\rangle_{\psi_4}} = -\frac{\langle A'B'CD\rangle_{\psi_4}}{\langle|A'B'CD|\rangle_{\psi_4}} = \ldots = \frac{\langle A'B'C'D'\rangle_{\psi_4}}{\langle|A'B'C'D'|\rangle_{\psi_4}} = 1. \tag{89}$$

This result can be explained by a model allowing the existence of a non-negative eight dimensional probability distribution for trichotomic observables, which is outlined in Appendix E. A contradiction of this model by quantum theory predictions can be discovered in the violation of inequality (86). The necessary condition for such a violation, according to Eqns (80)–(82), (89), is

$$\eta > \frac{2}{3} \approx 0.67\,. \tag{90}$$

This requirement on the efficiency of the detectors, which follows from inequality (86), is consistent with the model requirement (122) (see below).

A further increase of the number of observers leads to the following results. To disprove the theory of hidden variables at $V = 5$, detectors with quantum efficiency $\eta > 0.625$ are required (see Appendix F). In the case of arbitrary $V \geqslant 3$, the non-negative joint probability distribution leading to the Bell inequality violation of the type considered [see Appendix G, Eqns (135), (136)], yields

$$\frac{\langle|A_1A_2\ldots A_V|\rangle}{\langle|A_1A_2\ldots A_{V-1}|\rangle} = \frac{V}{2(V-1)}\,, \tag{91}$$

therefore, at $V \to \infty$ the ratio (91) tends to 1/2.

Although it seems implausible to realize such a gedanken experiment in practice, this result is interesting in the heuristic sense, as it provides the lower limit for the detector efficiency (50%), at which it is possible to refute the probabilistic model described in Appendix G, and in a broader sense, the hidden parameters theory in general, unless, of course, novel criteria of its testing are suggested. Perhaps it would be productive to construct CH-type inequalities for an arbitrary number of observers.

5. The Greenberger–Horne–Zeilinger (GHZ) paradox for three and four observers

For schemes with the number of observers $V \geqslant 3$, in addition to the Bell inequalities, one can also formulate the GHZ paradox [32, 33], leading to the contradiction $-1 = +1$. The condition of its existence is the dichotomicity of variables, which does not allow 'zeros'. Here, according to Eqn (74), under the full correlation condition we have

$$a'bc = 1, \quad ab'c = 1, \quad abc' = 1, \quad a'b'c' = -1. \tag{92}$$

Each equality here is tested in one of four series of the experiment. Let us multiply these equalities by one another:

$$z_3 \equiv (a'bc)(ab'c)(abc')(a'b'c') \equiv (aa'bb'cc')^2 = -1. \tag{93}$$

So, the square of a real number, which should be equal to $+1$, is equal to (-1). This is the essence of the paradox. It can be resolved within the framework of the theory of hidden variables using the model depicted in Appendix D. This model is based on refusing the dichotomicity of observables A, A', B, B', C, C' in favor of their trichotomicity, including zeros. Then, according to Eqn (117), z_3 is always zero, and instead of the contradiction $-1 = +1$ in Eqn (93), we have $z_3 = 0$.

The denial of this trichotomic model is possible only by accounting for double coincidences together with triple ones. According to Eqns (64), (65)

$$\frac{\langle|A'BC|\rangle_{\psi_3}}{\langle|A'B|\rangle_{\psi_3}} = \eta\,, \tag{94}$$

whereas the substitution of Eqns (63)–(65) into inequality (56) keeping Eqns (73) yields $\eta \leqslant 0.75$. Therefore, the hypothesis of the existence of a non-negative six dimensional joint probability distribution for trichotomic observables does not allow the detectors to have an efficiency higher than 75%.

By analogy, one can formulate the GHZ paradox for four observers [18, 32]. According to Eqn (89), in the case of dichotomic observers we have

$$z_4 \equiv (abcd)(a'b'cd)(a'bc'd)(ab'c'd) \equiv (aa'bb'cc'd^2)^2 = -1. \tag{95}$$

However, the trichotomic model described in Appendix E yields $z_4 = 0$, thereby resolving the paradox.

The result $-1 = +1$ is very impressive. However, it would be hard to obtain the ideal unitary correlation. So the question arises of how to treat an experimental result with a correlation of, say, 0.97. Does it prove the inadequacy of the theory of hidden variables? How justifiable is it to reject uncorrelated photocounts? Considering in addition the need for *a posteriori* statistical data processing to check the condition $\eta > V/2(V-1)$ following from Eqn (91), the preference for experimental testing of CH-type inequalities (45) becomes obvious.

6. Appendices

A. Quantum calculation of schemes with two observers

Consider the derivation of Eqns (13), (26), (27), (47), (49)–(51) in the framework of the simplest four-mode quantum model. Let us go back to Fig. 2a. Two modes registered by observer A will be described by the photon annihilation operators a_x and a_y. The first operator corresponds to the mode with plane polarization in the x direction, the second — in the y direction. Similarly, the two modes registered by observer B will be described by operators b_x and b_y.

The action of the analyzer on the field amplitude is equivalent to that of a beam splitter with transmission $t_a = \cos\alpha$ and is described by a unitary transformation (see, for example, Ref. [18])

$$\begin{aligned} a_+ &= t_a a_x + r_a a_y\,, \\ a_- &= -r_a a_x + t_a a_y\,, \end{aligned} \tag{96}$$

where a_+ is the operator describing the field at the '+' detector input, a_- at the '−' detector, $r_a = \sin\alpha$, $t_a^2 + r_a^2 \equiv T_a + R_a = 1$.

Photon number operators have the form

$$\begin{aligned} n_{a+} &= a_+^+ a_+ = T_a n_{ax} + R_a n_{ay} + t_a r_a (a_x^+ a_y + a_x a_y^+), \\ n_{a-} &= a_-^+ a_- = R_a n_{ax} + T_a n_{ay} - t_a r_a (a_x^+ a_y + a_x a_y^+), \end{aligned} \tag{97}$$

where a^+ is the corresponding photon creation operator.

Operators of the observables at the analyzer output are written here in the Heisenberg representation, i.e. are expressed through the input field operators. They must be averaged over the initial field state vector before the analyzers, i.e. over vector (11). In a more general form it can be expressed by vector (48), so

$$P_A(+) = \eta\langle n_{a+}\rangle_{\tilde{\psi}_2} = \eta(\mu^2\cos^2\alpha + v^2\sin^2\alpha), \tag{98}$$

$$P_A(-) = \eta\langle n_{a-}\rangle_{\tilde{\psi}_2} = \eta(v^2\cos^2\alpha + \mu^2\sin^2\alpha). \tag{99}$$

Analogous relationships determine $P_B(\pm)$, which are obtained by changing a into b and α into β.

Further on,

$$P_{AB}(++) = \langle n_{a+}n_{b+}\rangle_{\tilde{\psi}_2} = \eta^2(\mu\cos\alpha\cos\beta + v\sin\alpha\sin\beta)^2, \tag{100}$$

$$P_{AB}(--) = \langle n_{a-}n_{b-}\rangle_{\tilde{\psi}_2} = \eta^2(\mu\sin\alpha\sin\beta + v\cos\alpha\cos\beta)^2, \tag{101}$$

$$P_{AB}(+-) = \langle n_{a+}n_{b-}\rangle_{\tilde{\psi}_2} = \eta^2(\mu\cos\alpha\sin\beta - v\sin\alpha\cos\beta)^2, \tag{102}$$

$$P_{AB}(-+) = \langle n_{a-}n_{b+}\rangle_{\tilde{\psi}_2} = \eta^2(\mu\sin\alpha\cos\beta - v\cos\alpha\sin\beta)^2. \tag{103}$$

Considering the photocounts on the '+' detectors only, we obtain the description of the scheme in Fig. 3: from Eqn (98) and the corresponding expression for $P_B(+)$ we find Eqns (49), (50), and from Eqn (100) – the result (51).

Let us turn back to the scheme in Fig. 2a. At $\mu = v = 1/\sqrt{2}$ from Eqns (98), (100) we derive (47), from (98), (99) we obtain (27), since $\langle|A|\rangle = P_A(+) + P_A(-)$. Using Eqns (100)–(103) we arrived at (13) and (26), since $\langle AB\rangle = P_{AB}(++) + P_{AB}(--) - P_{AB}(+-) - P_{AB}(-+)$ and $\langle|AB|\rangle = P_{AB}(++) + P_{AB}(--) + P_{AB}(+-) + P_{AB}(-+)$.

Relationship (13) can be obtained as follows. The observable A at $\mu = v = 1/\sqrt{2}$ corresponds to the operator

$$A \equiv \eta(n_{a+} - n_{a-}) = \eta(\sigma_{az}\cos 2\alpha + \sigma_{ax}\sin 2\alpha). \tag{104}$$

Here

$$\sigma_{ax} = a_x^+ a_y + a_x a_y^+\,, \quad \sigma_{ay} = -\mathrm{i}(a_x^+ a_y - a_x a_y^+)\,,$$
$$\sigma_{az} = a_x^+ a_x - a_y^+ a_y \tag{105}$$

have the properties of Pauli spin operators.

Similar relationships determine the operator B:

$$B = \eta(n'_{b+} - n'_{b-}) = \eta(\sigma_{bz}\cos 2\beta + \sigma_{bx}\sin 2\beta). \tag{106}$$

In state (11) $\langle\sigma_{ax}\sigma_{bz}\rangle_{\psi_2} = \langle\sigma_{zx}\sigma_{bx}\rangle_{\psi_2} = 0$, $\langle\sigma_{ax}\sigma_{bx}\rangle_{\psi_2} = \langle\sigma_{az}\sigma_{bz}\rangle_{\psi_2} = 1$, hence Eqn (13). The first- and third-order moments vanish: $\langle A\rangle_{\psi_2} = \langle B\rangle_{\psi_2} = \langle ABA'\rangle_{\psi_2} = \ldots = 0$. The squares of the observables are $\langle A^2\rangle_{\psi_2} = \langle B^2\rangle_{\psi_2} = \eta^2$.

B. The derivation of the CH-type inequality

Let the values of a, a', b, b' belong to the set $\mathcal{S}$. For example, in the case of trichotomic observables, the elements of the set are $0, \pm 1$. We shall mark additional subsets by a tilde, for example $a \cup \tilde{a} = \mathcal{S}$. Then according to the correspondence condition

$$P_{ABB'}(a,b,b') = P_{AA'BB'}(a,a',b,b') + P_{AA'BB'}(a,\tilde{a}',b,b'), \tag{107}$$

we have

$$P_{ABB'}(a,b,b') \leqslant P_{A'B'}(a',b') + P_{A'B}(\tilde{a}',b)$$
$$= P_{A'B'}(a',b') + P_B(b) - P_{A'B}(a',b). \tag{108}$$

On the other hand,

$$0 \leqslant P_{ABB'}(a,\tilde{b},\tilde{b}') = P_{AB}(a,\tilde{b}) - P_{ABB'}(a,\tilde{b},b')$$
$$= P_A(a) - P_{AB}(a,b) - P_{AB'}(a,b') + P_{ABB'}(a,b,b'), \tag{109}$$

from which

$$-P_{ABB'}(a,b,b') \leqslant P_A(a) - P_{AB}(a,b) - P_{AB'}(a,b'). \tag{110}$$

After having summed inequalities (108) and (110), we obtain expression (45).

This derivation with small changes is borrowed from paper [35], which in turn was based on earlier works [36, 37].

C. The Bell inequality derivation for three observers

Consider the numerical inequality

$$4|s_3| \leqslant n_2 - n_3\,, \tag{111}$$

in which

$$s_3 = \frac{1}{2}(a'bc + ab'c + abc' - a'b'c')\,, \tag{112}$$

$$n_2 = |ab| + |a'b| + |ab'| + |a'b'| + |ac| + |a'c|$$
$$+ |ac'| + |a'c'| + |bc| + |b'c| + |bc'| + |b'c'|\,, \tag{113}$$

$$n_3 = |abc| + |a'bc| + |ab'c| + |abc'| + |a'b'c|$$
$$+ |a'bc'| + |ab'c'| + |a'b'c'|\,. \tag{114}$$

To begin with, we set $|a| = |a'| = |b| = |b'| = |c| = |c'| = 1$, then $s_3 = \pm 1$ and inequality (111) is met.

Let now $a = 0$, then instead of (111) we obtain the inequality

$$2|a'(bc - b'c')| \leqslant |a'|(|b| + |b'| + |c| + |c'|)$$
$$+ (|bc| + |b'c| + |bc'| + |b'c'|)(1 - |a'|), \tag{115}$$

which is obviously valid. By analogy, one can check the cases when b, b' or c' are equal to zero.

Since

$$\langle S_3\rangle = \sum_{a,a',b,b',c,c'} s_3 P_{AA'BB'CC'}(a,a',b,b',c,c'), \tag{116}$$

and $P_{AA'BB'CC'}(a,a',b,b',c,c') \geqslant 0$, we have inequality (56).

D. A six dimensional joint probability distribution in the case of the experiment for three observers

Let us write down the elementary six dimensional joint probabilities

$$P_{AA'BB'CC'}(a,a',b,b',c,c') \equiv (aa'bb'cc')$$

in such a way that the following relationships are satisfied: $a'bc = 0$ or 1, $ab'c = 0$ or 1, $abc' = 0$ or 1, $a'b'c' = 0$ or -1, and the number of zeros is minimal, i.e.

$$\begin{aligned}(----+0) &= (++++0) = (-+-+-0)\\ &= (+--++0) = (--++-0)\\ &= (++--0) = (-++-+0)\\ &= (+-+-0) = (+++-0+)\\ &= (-+--0+) = (++-+0-)\\ &= (-+++0-) = (+---0-)\\ &= (--+-0-) = (---+0+)\\ &= (+-++0+) = \ldots =\\ &= (0++-++) = \frac{1}{48}\,. \end{aligned} \tag{117}$$

The other elementary probabilities $P_{AA'BB'CC'}(a, a', b, b', c, c')$ are set to zero, so

$$\frac{\langle A'BC\rangle}{\langle|A'BC|\rangle} = \frac{\langle AB'C\rangle}{\langle|AB'C|\rangle} = \frac{\langle ABC'\rangle}{\langle|ABC'|\rangle} = -\frac{\langle A'B'C'\rangle}{\langle|A'B'C'|\rangle} = 1\,, \tag{118}$$

$$\frac{\langle|A'BC|\rangle}{\langle|A'B|\rangle} = \frac{\langle AB'C\rangle}{\langle|AB'|\rangle} = \ldots = \frac{3}{4}. \tag{119}$$

Thus, the minimal detector efficiency for experimental refutation of this model must be $\eta > 3/4$.

E. An eight dimensional joint probability distribution in the case of the experiment for four observers

Let us write down the eight dimensional elementary joint probabilities

$$P_{AA'BB'CC'DD'}(a, a', b, b', c, c', d, d') \equiv (aa'bb'cc'dd')$$

in such a way that the following relationships are satisfied: $abcd = 0$ or 1, $a'b'cd = 0$ or -1, $a'bc'd = 0$ or -1, $a'bcd' = 0$ or -1, $ab'c'd = 0$ or -1, $ab'cd' = 0$ or -1, $abc'd' = 0$ or -1, $a'b'c'd' = 0$ or 1, and the number of zeros is minimal, i.e.

$$\begin{aligned}(-++++0-0) &= (----++0+0)\\ &= (----+-0-0)\\ &= (-+---0-0) = \ldots\\ &= (0-0+-+--) = \frac{1}{384}\,. \end{aligned} \tag{120}$$

The other $P_{AA'BB'CC'DD'}(a, a', b, b', c, c', d, d')$ are set to zero, so

$$\frac{\langle ABCD\rangle}{\langle|ABCD|\rangle} = -\frac{\langle A'B'CD\rangle}{\langle|A'B'CD|\rangle} = \ldots = \frac{\langle A'B'C'D'\rangle}{\langle|A'B'C'D'|\rangle} = 1, \tag{121}$$

$$\frac{\langle|ABCD|\rangle}{\langle|ABC|\rangle} = \frac{\langle|A'B'CD|\rangle}{\langle|A'B'C|\rangle} = \ldots = \frac{2}{3}\,. \tag{122}$$

The minimal detector efficiency for experimental refutation of this model must be $\eta > 2/3$.

F. The Bell theorem for five observers

Let us write down the numerical inequality

$$16s_5 \leqslant n_4 - 2n_5 \tag{123}$$

for trichotomic variables $a, a', b, b', c, c', d, d', e, e' = 0, \pm 1$, where

$$s_5 \equiv \frac{1}{2}\left[s_4(e+e') + s_4'(e-e')\right], \tag{124}$$

$$n_4 \equiv |abcd| + |4(a'bcd)| + \ldots + |b'c'd'e'|\,, \tag{125}$$

$$n_5 \equiv |abcde| + |5(a'bcde)| + \ldots + |a'b'c'd'e'|\,. \tag{126}$$

Inequality (123) can be tested in analogy with (111).

When a non-negative joint probability distribution exists

$$P_{AA'BB'CC'DD'EE'}(a, a', b, b', c, c', d, d', e, e') \equiv (aa'bb'cc'dd'ee')$$

we obtain

$$16|\langle S_5\rangle| \leqslant \langle N_4\rangle - 2\langle N_5\rangle\,. \tag{127}$$

Quantum theory yields

$$\langle ABCDE\rangle_{\psi_5} = \eta^5 \cos\varphi, \tag{128}$$
$$\varphi \equiv \alpha + \beta + \gamma + \delta + \epsilon,$$

from which it follows (see Refs [17, 18]) that

$$\langle S_5\rangle_{\psi_5} = \frac{1}{4}\eta^5\left[\cos 2\varphi - 10\cos(2\varphi + \pi) + 5\cos 2(\varphi + \pi)\right], \tag{129}$$

and at $\varphi = 0$ $\langle S_5\rangle_{\psi_5} = 4\eta^5$. In this case inequality (127) is violated at

$$\eta > \frac{5}{8} = 0.625\,. \tag{130}$$

In the corresponding statistical model, we retain the following elementary probabilities as non-zero:

$$\begin{aligned}(-0-0-0--+-) &= (-0-0-0-+++-) =\\ &= (-0-0-0+---) = \ldots = \frac{1}{2560}\,. \end{aligned} \tag{131}$$

Then

$$\frac{\langle ABCDE\rangle}{\langle|ABCDE|\rangle} = -\frac{\langle A'B'CDE\rangle}{\langle|A'B'CDE|\rangle} = \ldots = \frac{\langle A'B'C'D'E\rangle}{\langle|A'B'C'D'E|\rangle} = 1\,, \tag{132}$$

$$\frac{\langle|ABCDE|\rangle}{\langle|ABCD|\rangle} = \frac{\langle|A'B'CDE|\rangle}{\langle|A'B'CD|\rangle} = \ldots = \frac{5}{8}\,, \tag{133}$$

which is consistent with inequality (130).

G. The joint probability distribution in the case of the experiment for an arbitrary number of observers V

We shall describe the test results for V observers by random variables A_1, A_1', A_2, ..., A_V, A_V', with a total number of variables $2V$.

In the case of odd $V \geqslant 3$, the maximal violation of the Bell inequality (Refs [17, 18]) corresponds to a full correlation as (74), (118), (132), or, more generally, as

$$\begin{aligned}\frac{\langle A_1A_2\ldots A_V\rangle}{\langle|A_1A_2\ldots A_V|\rangle} &= -\frac{\langle A_1'A_2'A_3\ldots A_V\rangle}{\langle|A_1'A_2'A_3\ldots A_V|\rangle} = \ldots\\ &= \frac{\langle A_1'A_2'A_3'A_4'A_5\ldots A_V\rangle}{\langle|A_1'A_2'A_3'A_4'A_5\ldots A_V|\rangle} = 1 \end{aligned} \tag{134}$$

For $V = 4$, if conditions (121) and (134) are met, the Bell inequality (86) is violated at a lower η (90) than is required to violate inequality (78) according to (85). In addition, the accomplishment of Eqn (134) allows one to study the GHZ paradox for an arbitrary number of observers.

Condition (134) is met when, firstly, elementary probabilities

$$P_{A_1A_1'A_2\ldots A_VA_V'}(a_1, a_1', a_2, \ldots, a_V, a_V') \equiv (a_1a_1'a_2\ldots a_Va_V')$$

include, as a minimum, $V-2$ zeros; it is better when only one of the two values of the same-name observables (a_j and a_j') vanishes (since elementary probabilities with $a_j = a_j' = 0$ do not contribute to the moment $\langle|A_1A_2\ldots A_V|\rangle$). Secondly, it is necessary to select half of the total number of such elementary probabilities yielding non-zero products of the same sign as (92), (117), (120), (131). With a given position of zeros, the total number of selected elementary probabilities is 2^V. Let them all equal p, and the others vanish.

Now we calculate $\langle|A_1A_2\ldots A_V|\rangle$. Among the V primed values a_1', a_2', ..., a_V' one can allocate $V-2$ zeros using C_V^{V-2} combinations, where $C_V^{V-2} = V!/2!(V-2)!$ is the binomial coefficient, so

$$\langle|A_1A_2\ldots A_V|\rangle = \sum(a_1a_1'a_2\ldots a_Va_V') = 2^V pC_V^{V-2}. \quad (135)$$

When constructing the Bell inequality as (56), (86), (127), the ratio of the moment $\langle|A_1A_2\ldots A_V|\rangle$ to the moment $\langle|A_1A_2\ldots A_{V-1}|\rangle$ is important. Let us calculate the latter. The elementary probabilities with $2^VC_V^{V-2}$ are added by the elementary probabilities for which $a_V = 0$. There are $2^VC_{V-1}^{V-3}$ of the such elementary probabilities, so

$$\langle|A_1A_2\ldots A_{V-1}|\rangle = \langle|A_1A_2\ldots A_V|\rangle + \sum(a_1a_1'a_2\ldots 0a_V')$$
$$= 2^Vp(C_V^{V-2} + C_{V-1}^{V-3}), \quad (136)$$

hence we find Eqn (91).

7. Conclusion

An experiment using sufficiently efficient detectors can answer the question about the hidden variable theory as a possible interpretation of the quantum theory. Although such experiments are unknown to the author, let us analyze the consequences of a refutation of the hidden variable theory.

That it is impossible to describe an experiment within the framework of the probabilistic models considered means the receiving tract (i.e. the position of the switch for measuring primed or unprimed observables) influences the formation of the light field. For example, in the schemes with two observers one has to use, instead of a unique four dimensional joint probability distribution function $P_{AA'BB'}(a, a', b, b')$, four two dimensional distributions

$$P_{AB}(a,b), \quad P_{A'B}(a',b), \quad P_{AB'}(a,b'), \quad P_{A'B'}(a',b'),$$

which cannot be reduced to $P_{AA'BB'}(a, a', b, b')$. Therefore, the joint probability distributions in different test series turn out to be inconsistent with each other, despite the absence of any changes in the source when switching the working regimes of the observers. This implies that the quantum field cannot be separated into *a priori* (photon emission) and *a posteriori* (photon detection) parts, which confirms the conclusion of paper [34]: "A photon is photon only if it is a registered photon". In visual terms of photons — wave packets — this can apparently be interpreted as follows: a wave packet with quantized energy emerges between a *concrete* source and a *concrete* absorber, and is not emitted directionlessly into space in general. How can this possibly be the case and is it not absurd to make such a supposition? If we take as real the existence of vacuum waves (vacuum fluctuations) as the background on which light and other phenomena take place (see, for example, [38–40]), then we will have to admit the concurrent presence of head-on traveling waves of non-zero amplitude until the source emits a photon. Consequently, in the finite spectral region the head-on vacuum waves traveling between detector and source might be able to effect a preliminary synchronization, as it were, of source and detector atoms, and this might have a bearing on the birth of the photon. This closed, self-consistent approach might ultimately serve to resolve the Bell paradoxes and provide an insight into the nature of the photon.

The study was supported by the Russian Foundation for Basic Research (grant 96-02-1633a).

References

1. Tatarskiĭ V I *Usp. Fiz. Nauk* **139** 587 (1983) [*Sov. Phys. Usp.* **26** 311 (1983)]
2. Klyshko D N *Usp. Fiz. Nauk* **166** 613 (1996) [*Phys. Usp.* **39** 573 (1996)]
3. Agarwal G S, Home D, Schleich W *Phys. Lett. A* **170** 359 (1992)
4. Smithey D T et al. *Phys. Rev. Lett.* **70**, 1244 (1993)
5. Einstein A, Podolsky B, Rosen N *Phys. Rev.* **47** 777 (1935) [Translated into Russian *Usp. Fiz. Nauk* **16** 440 (1936)]
6. Bohm D *Quantum Theory* (New York: Printice–Hall, 1951) [Translated into Russian (Moscow: Fizmatgiz, 1961)]
7. Bell J S *Physics* **1** 195 (1964)
8. Belinskiĭ A V *Pis'ma Zh. Eksp. Teor. Fiz.* **59** 137 (1994) [*JETP Lett.* **59** 147 (1994)]
9. Belinskiĭ A V *Usp. Fiz. Nauk* **164** 435 (1994) [*Phys. Usp.* **37** 413 (1994)]
10. Klyshko D N *Phys. Lett. A* **218** 119 (1996)
11. Evdokimov N V et al. *Usp. Fiz. Nauk* **166** 91 (1996) [*Phys. Usp.* **39** 83 (1996)]
12. Aspect A, Grangier P, Roger G *Phys. Rev. Lett.* **47** 460 (1981); **49** 91 (1982); Aspect A, Dalibar J, Roger G *Phys. Rev. Lett.* **49** 1804 (1982)
13. Clauser J F, Horne M A *Phys. Rev. D* **10** 526 (1974)
14. Shih Y H, Sergienko A V, Rubin M H, Kiess T E, Alley C O *Phys. Rev. A* **50** 23 (1994)
15. Clauser J F et al. *Phys. Rev. Lett.* **23** 880 (1969)
16. Klyshko D N *Phys. Lett. A* **172** 399 (1993)
17. Belinsky A V, Klyshko D N *Phys. Lett. A* **176** 415 (1993)
18. Belinskiĭ A V, Klyshko D N *Usp. Fiz. Nauk* **163** (8) 1 (1993) [*Phys. Usp.* **36** 653 (1993)]
19. Klyshko D N *Fotony i Nelineĭnaya Optika* (Photons and Nonlinear Optics) (Moscow: Nauka, 1980) [Translated into English (New York: Gordon & Breach, 1988)]
20. Mermin N D *New Techniques and Idears in Quantum Meargement Theory* (Ed. D M Greenberger) (New York: Academy of Science, 1986) p. 422
21. Santos E *Phys. Rev. Lett.* **66** 1388 3227 (1991); *Phys. Rev. A* **46** 3646 (1992); *Phys. Lett. A* **212** 10 (1996)
22. Eberhard P H *Phys. Rev. A* **47** 747 (1993)
23. Belinskiĭ A V *Pis'ma Zh. Eksp. Teor. Fiz.* **64** 294 (1996) [*JETP Lett.* **64** 325 (1996)]
24. Santos E *Found. Phys.* **21** 221 (1991)
25. Garg A, Mermin N D *Phys. Rev. D* **35** 3831 (1987)
26. Pavičič M *J. Opt. Soc. Am. B* **12** 821 (1995)
27. Pavičič M *Phys. Lett. A* **209** 255 (1995)
28. Clauser J F, Horne M A *Phys. Rev. D* **10** 526 (1974)
29. Kwiat P G et al. *Phys. Rev. A* **49** 3209 (1994)
30. Elyutin P V, Klyshko D N *Phys. Lett. A* **149** 241 (1990)
31. Shih Y H, Rubin M H *Phys. Lett. A* **182** 16 (1993)
32. Greenberger D M, Horne M A, Zeilinger A *Bell's Theorem, Quantum Theory and Conceptions of the Universe* (Ed. M Kafatos) (Dordrecht, Holland: Kluwer, 1989) p. 69
33. Greenberger D M et al. *Am. J. Phys.* **58** 1131 (1990)
34. Klyshko D N *Usp. Fiz. Nauk* **164** 1187 (1994) [*Phys. Usp.* **37** 1097 (1994)]
35. Belinskiĭ A V *Usp. Fiz. Nauk* **164** 231 (1994) [*Phys. Usp.* **37** 219 (1994)]
36. Fine A *Phys. Rev. Lett.* **48** 291 (1982)
37. de Muynck W M *Phys. Lett. A* **114** 65 (1986)
38. Boyer T H *Found. Phys.* **19** 349 (1989)
39. Puthoff H E *Phys Rev. A* **35** 3266 (1987)
40. Puthoff H E *Phys. Rev. A* **40** 4857 (1989)