Physics – Uspekhi **40** (1) 53 – 94 (1997)

PHYSICS OF OUR DAYS PACS number: **52.90.+z**

Dust plasma crystals, drops, and clouds

V N Tsytovich

Contents

Abstract. The experimental and theoretical aspects of the dust particle phenomenon are discussed. The subjects include dust particle attraction in open systems (in spite of charges of up to $10^5\,e$ on individual particles); dust molecule formation; large (100 eV and higher) values of the dust-plasma crystal binding energy; self-contraction instabilities (similar to and operating together with gravitational instability in cosmic structures); free boundary dust-plasma crystals; new dust attraction mechanisms; the growth and agglomeration of dust particles; and the development of long order in dust plasmas. New estimates for understanding the fireball phenomenon and star production are given.

1. Introduction

The subject of the present discussion, namely, plasma-dust crystals, droplets, and clouds, constitute a very new branch of research in the formation stage. Most of the experimental data is new. The aim of the present work is not simply to repeat the results given in the original experimental works. The reader, if necessary, can read the original papers cited below. Our aim is to give comments on these results and to give additional estimates which will, hopefully, make the physical conditions within the different experiments more clear.

The comparison of observation with numerical results for strongly correlated Coulomb systems is not sufficiently grounded. For this reason, one of the aims of the present work is to apply the theory of open systems to interpret various new effects, and then ascertain under what conditions such assumptions are valid within an experiment. Thence, using the experimental data, we will give additional estimates absent from the original experimental works.

In Section 2 of this review, which is devoted to recent experiments, attempts will be made to provide a mental picture of the physical processes which should occur under the conditions of an experiment. Section 3 of this review covers the newly developed theoretical approaches. In some cases, we were unable to avoid certain estimates in the experimental part using well known formulas for dust charging and dust behavior in a plasma, also given, for completeness, in the theoretical part of this review. References to these formulas are given in both parts. Also, in some cases, the experimental part makes use of certain equations derived in the theoretical part, but only those which were confirmed recently by numerical 3D simulations (giving a clear indication to their range of applicability). In Section 4 of the review, we return to various estimates of Section 2 to formulate topics for future research.

It is necessary here to outline the physical processes that occur in a plasma in the presence of dust particles:

V N Tsytovich General Physics Institute, Russian Academy of Sciences, ul. Vavilova, 117942 Moscow, Russia
Tel. (7-095) 135-02 47. Fax (7-095) 135-02 70
E-mail: tsyt@ewm.gpi.msk.su

Received 15 June 1996
Uspekhi Fizicheskikh Nauk **167** (1) 57 – 99 (1997)
Submitted in English by the author; edited by L V Semenova

(1) Dust particles can survive for a long time in a plasma, and even grow, over a wide range of electron temperatures — from several electronvolts up to several tens of electronvolts. This temperature interval corresponds, in most experiments, to low-temperature plasmas.

(2) The dust particles which appear in a plasma (by injection or *in situ* growth) soon acquire very large charge corresponding to the floating potential (for an estimate of the time of charging see below). Dust charge increases until the thermal electron flux on a dust particle becomes equivalent to the thermal ion flux. This means that $Z_d e^2/a \approx \beta T_e$, where T_e is the electron temperature in energy units, a is the size of the dust particle and Z_d is the charge of the dust particle in the units of electron charge. The numerical factor β appears in many circumstances to be close to 2 and depends on the plasma density logarithmically, on the ratio of electron to ion temperatures, as well as on certain other plasma parameters. For micron-sized dust particles, electron temperature $T_e \approx 3$ eV, and, for hydrogen plasmas, $Z_d \approx 10^4$.

(3) The collective influence of the dust particles' electric field on plasma processes is significant if the dust charge density (the density of dust charges per unit plasma volume), $n_d Z_d$, exceeds the electron charge density, or, in other words:

$$P \equiv \frac{n_d Z_d}{n_e} \geqslant 1\,, \tag{1.1}$$

where n_d is the dust density and n_e is the electron density. The dust charges should be taken into account not only in the unperturbed state under the condition of quasi-neutrality but also in the perturbations of this state, such as in all collective plasma modes.

(4) The electrostatic motion of dust particles is important, not only because their charge is rather large, but also because their charge varies in space and time, depending upon the parameters of the surrounding plasma.

(5) The electric field near a dust particle is nonlinear, but the screening of this field can be deduced with linear theory (with only a small error) to be of the order of the Debye radius, d. For a single dust particle, the standard 'sum' of electron and ion Debye radii is given by

$$\frac{1}{d^2} = \frac{1}{d_e^2} + \frac{1}{d_i^2}\,,$$

where $d_e = v_{Te}/\omega_{pe}$ is the Debye radius of electrons and $d_i = v_{Ti}/\omega_{pi}$ is the Debye radius of ions. Here, $\omega_{pe,i}$ are the plasma frequencies of the electrons and the ions and $v_{Te,i}$ are the electron and ion thermal velocities. In many low-temperature plasma experiments $d_i \ll d_e$, i. e. the screening is determined mainly by the ion Debye radius. As a rule, the radius of the dust particle is much smaller than the Debye radius:

$$a \ll d\,. \tag{1.2}$$

(6) The properties and effects of dust particles in a plasma vary considerably between the case where the average distance between particles is larger than the Debye distance, and the case where the average distance is smaller than the Debye distance. An important question in connection with this is whether the dust can be treated as an additional plasma component — one with very heavy and highly charged particles. In some approximations, for any component to be treated as a plasma component the number of particles in the Debye sphere should be large. For plasma electrons and ions, the number of plasma particles in a sphere of Debye radius,

$$N_{d,e,i} = \frac{4\pi}{3}\, n_{e,i} d_{e,i}^3\,,$$

is much larger than unity, such that the Debye radii of different plasma particles overlap and the average distance between them is much less than the Debye radius.

For electrons and ions, a simple estimate shows that the ratio of the Coulomb interaction (over the average inter-particle distance) to the average kinetic energy, is of the order $1/N_{e,i}^{2/3}$. From this relation it is usually concluded that as soon as $N_d \to 1$, the interactions and correlations between particles have a tendency to become strong. This is correct for plasma particles, but cannot be applied directly to dust particles without further analysis. In other words, one cannot, from the fact that inter-dust distances are less than the Debye radius, conclude that the interaction between them is strong.

The strength of interaction can be deduced by judging its validity as a third plasma-component. For dust to be considered as such it is necessary to fulfill the relation $N_d^d = (4\pi/3) n_d d_d^3 \gg 1$, where $d_d = v_{Td}/\omega_{pd}$ is the Debye dust radius (ω_{pd} is the plasma dust frequency and v_{Td} is the mean thermal dust velocity). For $N_d^d \gg 1$ the Debye dust radius should be added to the definition of the total Debye radius, using the same 'summing' law:

$$\frac{1}{d^2} = \frac{1}{d_e^2} + \frac{1}{d_i^2} + \frac{1}{d_d^2}\,.$$

But under the condition $N_d^d \ll 1$, the dust component is not playing the role of an additional plasma component. The Debye radius is thus determined only by the electrons and ions and the distance between the dust particles can be larger than the Debye radius making interactions weak. The main interaction between dust particles would then not be a pure Coulomb interaction, but a screened Coulomb interaction. It should be noticed that Debye screening is, itself, a consequence of the Coulomb interaction between many charged particles.

The above suggests that it is of principle importance that a dusty plasma is always a multi-component system and not simply a one component system; it is also, in this case, not a three component system as the dust is not a plasma component. The approximation of One Component Plasma (OPC), widely used in the past for describing strong correlations and phase transitions, is not applicable to dusty plasmas.

It is useful to write down the condition $(4\pi/3) n_d d^3 \gg 1$ under which the dust component can be considered as some additional heavy, highly charged plasma component in the form:

$$\sqrt{n_d} \ll 4 \times 10^8 \frac{T_d^{3/2}}{Z_d^3}\,. \tag{1.3}$$

Here the density is in cm^{-3} and the dust temperature is in eV. For $Z_d \approx 10^4$, relation (1.3) corresponds to dust densities much lower than those used and measured in existing experiments. Therefore, d_d does not enter into the definition of the total Debye radius and the statement that the correlations become strong as soon as the number of particles in the Debye sphere approaches unity is not correct. One can also recognize that the Debye radius in this case does not depend on Z_d, while the interaction considers $Z_d \gg 1$. Only in the case where the dust component can be treated as a plasma

component is it reasonable to consider the strong correlations in the form investigated in Ref. [1], namely, the strong correlations in a plasma.

It is important to recognize, not only differences between states with large and small number of particles within Debye spheres, but also that the definition of the Debye radius depends on whether the dust-component can, or cannot be considered as an additional plasma component. This changes the estimates indicating where the correlations can be considered as strong. In the case where the distance between the dust particles exceeds the Debye radius, and the dust cannot be considered as an additional plasma component (i.e. relation (1.3) is invalid), the dust interaction will not follow the tail of the Yukawa potential [$\propto (1/r)\exp(-r/d)$] considered previously in Ref. [2] for strongly correlated plasma [3].

(7) Plasma-dust systems are always open systems, as the plasma particle fluxes recombining on the dust particles, as well as the energy fluxes absorbed by the dust particles, need to be supported by external source of particles and energy. The rate of dissipation is high with a tendency for the formation of long lived localized and self-organized structures.

An understanding of the above, rather simple general statements, is necessary to follow the analysis of existing experimental data as well as for the description of new theoretical concepts.

2. Comments on laboratory experiments

2.1 Plasma-dust crystals

Plasma-dust crystals are very easy to observe, and regular grain-separation leaves little doubt about their state being crystalline. Particle positions and the crystal lattices are observed visually, and fixed in time, using photographic methods. The important point for discussion is whether these structures correspond to strongly correlated Coulomb systems of dust particles, or not. This question will begin to be discussed in this section.

2.1.1 About the experiments of the Max Planck Institute for Extraterrestrial Physics (FRG)†. These experiments were initiated at the proposal of G E Morfill‡ [4] and were performed in the Institute of Cosmic Modeling under the supervision of G Morfill and J Goree§.

In the experiments, the plasma-dust crystals were observed experimentally for the first time (the first publication by G Morfill appears in August 1994 [5]). The other authors of this publication are given in the references. For simplicity, we will consider these experiments to have been performed by the Max Planck Institute for Extraterrestrial Physics, as J Goree, at that time, was a visiting fellow of Garching Institute, and, as the other authors are postgraduate students of G Morfill. Detailed results are given in Ref. [6].

In presence of the Earth's gravitational field, dust particles experience gravitational forces and can therefore be injected into plasmas from above. Such a scheme was used in experiments [5, 6], in which a preliminary plasma was created by a HF discharge in argon, at a frequency of 13.56 MHz and a power of 0.4 W, between two flat electrodes with a hole in the upper electrode used for the injection of dust particles. This plasma was low-temperature with a low degree of ionization. A schematic of the experiment, which is now standard, will not be displayed here.

Before dust injection, the electron temperature was $T_e \sim (1-3)$ eV, and the ion density was $n_i \approx 10^9\,\mathrm{cm}^{-3}$ with a temperature near that of the room, although direct measurements were not made. The argument for the last assumption is the rapid exchange of energy between ions and neutrals, which collide with the walls of the discharge chamber. Under these conditions, the density of electrons is found from the condition of quasi-neutrality, $n_e = n_i - n_d Z_d$, where n_d is the dust density and Z_d is the charge of a single dust particle in units of electron charge. The dust density measured after injection was $n_d \approx 4 \times 10^4\ \mathrm{cm}^{-3}$, and the inferred dust charge was $Z_d \approx 10^4$, which gives the value of electron density of 6×10^8 — not substantially different from the ion density.

The first important parameter which can be obtained from these data is the parameter $P = n_d Z_d / n_e \approx 0.66$ [see relation (1.1)]. This estimate immediately shows the important role of the collective effects introduced by the dust component.

Further estimates show that relation (1.3) is certainly not valid. The electron Debye radius is equal to $d_e = \sqrt{T_e/4\pi n_e e^2} \approx 0.043$ cm while the ion Debye radius is equal to $d_i \approx d_e/10 \approx 0.0043$ cm, which corresponds to 43μm. The total Debye radius d, as relation (1.3) is not fulfilled, is determined by the electrons and ions only, $1/d^2 = 1/d_e^2 + 1/d_i^2$, and practically coincides with ion Debye radius. The size of the injected dust particles, $a \approx 7 \pm 0.2\,\mu\mathrm{m}$, which is much less than the Debye screening radius. The latter is very important, as, in the limit $a \ll d$, both the experimental data [7] and the numerical simulations [8] suggest that the charging and interaction of dust particles and plasma particles, can, to a good approximation, be described by the Orbit Motion Limited (OML) approach. The essence of this approach is that, independently of the distribution of the electrostatic potential around the dust particle (which can have any complicated nonlinear structure), using only the energy and momentum conservation laws, it is possible to find the bombardment cross-sections of electrostatic interaction between plasma electrons and ions, and dust particles.

One assumption of the OML theory is that the plasma particles which have impact parameters equal to, less than, that for which they touch the dust particle tangentially, are absorbed by the dust particle, and all other plasma particles, with impact parameters larger that this critical value, are not absorbed by the dust particle. This approach is heavily used in the present literature. A more detailed description is postponed until the theoretical part of this review.

Using the OML approach we are able to obtain two important estimates: the charge on the dust particles and the charging time. These values are needed for a general description of the physical conditions within the experiment under discussion. For the experimental data given above the OML approach gives $Z_d e^2/aT_e = 2.18$ which merely fixes the numerical coefficient in the expression for the charge of the dust particle which was already obtained from the concept of floating potential. The calculations then give the value of the charge $Z_d \approx 10^4$ which coincides with that given in Refs [5, 6].

The characteristic time for the charging of dust particles, τ_{ch}, is given by OML to be $\nu_{ch} \equiv 1/\tau_{ch} = 3.18\omega_{pi} a/\sqrt{2\pi} d \approx$

† Max-Planck Institute für Extraterrestrische Physik, 85740 Garching, Germany.

‡ DLR, Institut für Raumsimulation, 51140 Köln, Germany.

§ Department of Astronomy, the University of Iowa, Iowa City, IA 52242, USA.

$1.3 \times 10^6\ \mathrm{s}^{-1}$. From this expression it is clear that the charging time is extremely short and that the dust particles become charged very quickly after falling into the discharge chamber (the maximum dust velocity is estimated as several cm s^{-1}).

Falling dust particles meet at the lower electrode where the electric field has the same nature as that near the surface of a dust particle due to its charging: the thermal electron velocity is much larger than the thermal ion velocity such that the electrons are the first to reach the lower electrode from plasma, charging it up to the value when most of the electrons will be reflected by the electric field created by the charging, and this process is continued until the flux of the electrons becomes equal to the flux of ions. This electric field is screened by a distance of several Debye radii and is usually called as a double layer structure. One difference from the dust is that the lower electrode is flat, or, more precisely, its radius of curvature is much less than the Debye radius, while for a dust particle this relation is the opposite.

The potential of the lower electrode is nonlinearly screened and is approximately 7 times greater than the electron temperature (in the same energy units). The electric field acting on a dust particle in the double layer can compensate for the force of gravity when the dust particles are not very heavy. Thus the formation of a dust cloud at the lower electrode from the injection of dust particles through a hole in upper electrode can be understood in the following way: the first injected dust particles find their equilibrium positions in the lower layer where the gravity and electric forces compensate for each other, usually several Debye radii above the surface of the lower electrode; this layer is, in some sense, a foundation for the dust cloud since the subsequent layers are 'supported' by this first layer. The higher the position of the subsequent layer the less is the influence of the electric field of the double layer.

Such levitation has been observed in many experiments. It seems to be important that, in the lower layer, not only the gravitational force acts on the dust particles, moving them through the chamber, but also the force due to ion drag (due to the ion flux in the double layer)

Remembering that the negative charge on the lower electrode grows until the electron thermal flux is equal to the ion thermal flux, giving a stationary recombination rate of plasma particles on the electrodes. A similar constant rate of recombination also occurs on dust particles. This recombination in the dusty plasma volume and on the electrodes is compensated by the HF ionization rate which supports constant densities of electrons and ions in the plasma volume. Thus, the electric force in the lower double layer is working against both the force of gravity and the ion drag force. A double layer also exists near the upper electrode, but due to the injection procedure, the dust particles need time to receive the charge for the electric force to work.

In the case of dust creation within the plasma-volume, the dust clouds should appear at both electrodes, but at the upper electrode only in the case where the ion drag force is larger than the gravity force. Since the drag force and the gravity force at the upper electrode work in opposite directions, the upper cloud should always be thinner than the lower cloud which is exactly what is observed in some experiments [9]. It is not, however, observed in the experiments under discussion because a different injection method is used.

An important observation of Refs [5, 6] is that the dust particles were automatically finding their place in the layers with a fairly fixed spacing between them. The whole structure sustains 18 layers. In fact, the observations show that this structure is a crystal structure in which, in each layer, the dust particles form a hexagonal structure, and, between the layers, the particles are positioned one above the other, i.e. the lattice was hexagonal within the plains and cubic between the plains.

The average distance between the dust particles is easy to find from the given value of the dust density, δ. We find $\delta \approx 250\,\mu\mathrm{m}$ which corresponds to (6 – 7) Debye radii. It is necessary to emphasize that δ is much larger than the Debye radius.

The temperature of dust particles T_d, determined experimentally as the energy of the Brownian motion of the particles around their equilibrium positions in the crystal, is close to room temperature. This is expected since the dust particles have a high rate of collisions with neutrals which are at, or near, the room temperature.

Let us comment on these observations. The appearance of a regular crystalline structure is an established fact of experimental observations and it is possible to focus on an interpretation of this result. The main question is whether, for the parameters given above, the interpretation can be made on the basis of strongly correlated Coulomb systems, and, moreover, whether one can use the approximation [1] of the OPC approach for describing the transition to the crystalline state. The results of OPC method used in Ref. [1] were obtained only numerically with Monte Carlo method using periodic boundary conditions and a Debye screening radius less than the mean inter-dust distance, or, at least of the order of the mean inter-dust distance.

Due to the absence of anything better, the experimental results were compared only with Ref. [1]. Nevertheless, we will reproduce some such comparisons here and show why such comparisons do not correspond to the physical situation, which, according to the experimental parameters given, should be present in experiments.

Following Ref. [1], let us introduce parameter Γ as a ratio of pure (without Debye screening) electrostatic energy of interaction between dust particles at a distance of the crystal lattice constant δ (equal to the average inter-dust distance, which, as was mentioned, is larger than the Debye radius) to the dust kinetic energy T_d, i.e. $\Gamma = Z_\mathrm{d}^2 e^2/\delta T_\mathrm{d}$. According to the numerical results of the Monte Carlo simulations [1], the transition to the crystalline state should occur for $\Gamma > \Gamma_\mathrm{cr} = 170$. For the parameters of Refs [5, 6] given above, $\Gamma \approx 2 \times 10^4$ which is certainly larger than the critical value of Γ_cr. This fact itself raises doubts about the possibility of such a comparison.

First of all, the average distance between dust particles is much larger than the Debye radius and if one uses the Yukawa type, not the Coulomb type interactions in Γ (the potential with the Debye screening taken into account in Coulomb interactions instead of a Coulomb potential without Debye screening, $Z_\mathrm{d} e/\delta$), we get, in Γ, an additional factor at least of the order of 10^{-5} (if $\delta = 6d$). Then, Γ will be small even compared to 1, not 170 as in Ref. [1].

The screening of dust particles is nonlinear since the potential on the surface of a dust particle is $2.1 \times T_\mathrm{e}$ and the expansion, using the parameter $e\phi/T_\mathrm{e}$, is not permissible. This nonlinearity, however, changes the estimates only slightly as the nonlinearity occurs only close to the surface of the dust (of the order of a) and at distances $d \ll a$. The relative change of densities due to nonlinearities is also small.

The numerical simulations [8] show that the screening of the Coulomb fields around dust particles with a size much less

than the Debye radius and at distances of the order of the Debye radius, is, to a good approximation, described by linear Debye screening. However, at distances larger than the Debye radius, other types of interaction become important which are related to the openness of the system and the fluxes of the plasma particles on the dust particles. These will be discussed in the theoretical part of the review. Here we can only mention that for agreement between the numerical results of Ref. [1] and the experimental results of Refs [5, 6], it is necessary to assume either that, due to experimental uncertainties, the screening radius is of the order of the lattice constant, or, to suppose that the close packing of many dust particles can change the screening radius such that it is not correct to use the value estimated for isolated dust particles. Both assumptions seem unconvincing, and before making them, one could avoid the simple interactions occuring at distances larger than the Debye radius by considering the openness of the system. We will discuss these possible explanations for the experimental results later, after we have described the corresponding theoretical concepts.

It appears that the simple physical interpretation is much more appropriate for describing the observational data in the limit $\delta \gg d$. We emphasize here that the results [1], for one component plasma, are not applicable for multi-component plasma where the Debye radius is not directly related to the strength of interaction.

It should also be noted that Ref. [1] contains not only the above mentioned numerical results for OPC, but also a description of some theoretical approaches for phase transition to the solid state obtained by selective summing of the chain of perturbation theory for correlation functions. Although this completely theoretical approach gives similar results to those of numerical simulations, it is only its correspondence to the numerical results that justifies it, and, therefore, these theoretical results are not used for comparison with experimental data.

One essential point of the partially analytical results of Ref. [1] should however be mentioned here. It is that in the analytical calculations the exchange of quantum energy in interactions between particles is taken into account. This is natural for such quantum objects as traditional crystals as only the exchange interactions can formulate the attractions necessary for the existence of free boundary crystals.

In numerical Monte Carlo OPC simulations, the problem of attraction between single atoms (or ions) is hidden by considering an infinite crystal and using the periodic boundary conditions. In this case, the problem of a crystal with free boundaries does not arise since the ion charge is, on average, compensated by oppositely charged particles.

For a charged dust particle, only classical effects are important as the Bohr radius is much smaller than a size of the dust particle. Also, it is important that the charge on the dust particles is large (up to $10^5 e$).

A natural question is whether classical mechanisms for the attraction of dust particles are possible. We will show below that classical attractions do indeed appear between dust particles and that this attraction is due only to the openness of the system. We will discuss this point in detail in the theoretical part of this review.

We should clarify not only the physical mechanisms which make the attraction possible for distances greater or less than the Debye radius, but moreover, we should indicate the existence of a possibility for using the mechanism of this attraction for an interpretation of the experimental results discussed above, and also show the possibility of the existence of plasma-dust crystals within a free boundary system. This type of interpretation can be experimentally confirmed by looking at plasma-dust crystals formed in micro-gravity (that is in cosmic experiments). It should be mentioned that in the laboratory experiments [5, 6] the plasma-dust crystal was supported both from the bottom, by the electric field of the double layer, and from the sides, as the parallel electrodes are finite. So, the crystals produced were not crystals with free boundaries.

In connection with this problem, it is necessary to say a few words about self-organization processes. What is interesting in the experimental observations is the constancy of the separation of the dust particles in the dust-crystal state. One question is whether this constancy is supported by the fact that the particles used in experiments are (approximately) mono-sized. The dispersion of sizes of the injected dust particles is, in this experiment, a relatively small, $\pm 0.2\,\mu$m, for the average size of dust particles of $7\,\mu$m.

The charge on the dust particles, however, depends not only on their size but also depends logarithmically on the density and temperature ratio of surrounding plasma (according to the OML approach). The plasma under discussion is rather inhomogeneous in the region of the plasma crystal. It is also well known (see Ref. [10]), that the ionization by the HF field is very inhomogeneous. Moreover, the plasma parameters in the double layer, in which a substantial part of the plasma-dust crystal is situated, are variable. Finally, the crystal itself is not a weak perturbation to a preliminarily prepared plasma (remembering that $P \approx 1$) and thus the crystal changes the plasma parameters differently in the part of the crystal situated completely in the double layer from the part of the crystal which is far from the double layer, where the electric field is much different.

The appearance of this very rigid regularity in the spatial-distribution of dust particles in the plasma-dust crystal, where the different dust particles are present under very different plasma conditions, is only puzzling if one does not call to mind the possibility of the natural self-organization of dust particles. Recall that the variation of the charges can be as high as a factor of 2, whereas any changes in the dust separation within a factor of 4 are not observed.

The possibility of self-adjustment and self-organization increases when the dust separation is larger than the Debye radius (this will be shown in the theoretical part of the present paper). In the latter case, the interaction due to the openness of the system is much more dependent on the local plasma parameters (not logarithmically as for the dust charge) and therefore small changes in the local plasma parameters can support the self-organization processes.

We intend to consider the possibility of the formation of the plasma-dust crystals for dust separations larger than the Debye radius, with mechanisms different from strong correlations. This possibility seems to be a new one.

A final understanding of the relationship between the dust separation and the Debye radius, however, can only be obtained experimentally. There is no reason to suppose that, in addition to crystals with a large ratio of Debye radius to dust separation, there cannot also exist plasma-dust crystals with a low ratio of Debye radius to dust separation. These crystals, however, seem to exist only in strongly correlated systems, similar to those discussed in Ref. [1].

2.1.2 About the experiments of Chungli University group (Taiwan)†. The publication of the Chungli University group [11] appears almost simultaneously with the first publication [5], being only slightly later (the more detailed publication of the Max Planck Institute for Extraterrestrial Physics group [6], which we discussed above, appears slightly later than Ref. [11], but the priority of Ref. [5] is without any doubt). The experiments [11] also use argon gas. In contrast to experiments [5, 6], however, where the dust particle are injected with very fixed sizes, in Ref. [11] the appearance of dust particles is a result of chemical reactions within the plasma volume. The dust particles are created as result of the recombination of molecular complexes of SiO_2, with subsequent agglomeration. Particle sizes increase continuously during the chemical reactions until the dust particles are micron-sized (or of that order). The distribution of sizes is, therefore, not narrow.

The size dispersion does not prevent the appearance of large negative charges on the dust particles and their collection close to the lower electrode. The configuration of the HF field confines the charged dust particles such that the observed plasma-dust cloud is not a cloud with a free boundary.

The discharge is supported by an HF field at the same frequency as in Refs [5, 6], 13.56 MHz. The ion density is also of the same order of magnitude as in Refs [5, 6], $(10^9 - 10^{10})$ cm^{-3}. Although the sizes of dust particles can vary substantially, the observations show that a very regular crystalline structure forms with particles of almost equal sizes — about 10 μm. The observed lattice is a centered cubic with 180 μm and 130 μm sides. The last value corresponds to the distance between the planes of the cubic structure and the central particles. In a single plane, the particles have positions in the square corners. In the next plane their positions are at the center of the square. Domains with such a structure coexist with domains with a hexagonal close-packed structure, where, in one plane, the particles have positions in the corners of triangles, and in the next plane the particles also fall in the corners of triangles, just shifted such that the corners fall over the centers of previous triangles, in line, and in the same direction, plane-by-plane (fcc alternates every other plane).

The lattice constant in the first plane is 160 μm, and the distance between the planes is 130 μm. An estimate for the screening radius is not given in Ref. [11], but as the ion concentration is somewhat larger than in Refs [5, 6] we can conclude that the Debye radius is somewhat less than in Refs [5, 6] but still somewhat larger than the dust size. The ratio of the lattice constant to the screening radius is even larger than in Refs [5, 6].

In Ref. [11] the process of melting in plasma-dust crystals is observed for the first time, showing an increase in the thermal motion of the dust particles, and/or an increase in the fluctuations of the collective fields. These two types of Brownian motions should be related. In plasma-dust crystals there may exist a new mechanism of melting related to fluctuations of dust charge (such a mechanism is impossible for ordinary atoms and molecules). In experiments [11], concerning ordinary first order transitions, it is shown that after the melting of a plasma-dust crystal, the distant ordering in the pair correlation function disappears, while the nearby ordering remains. Also, a decrease in neutral gas pressure decreases the neutral friction of dust particles while increasing the dust temperature.

On the surface of the dust particles the potential is approximately equal to twice the electron temperature (this appears in the OML approach), and thus, at a distance of the order of the lattice constant (which is 15 times larger than the dust size), the potential will be 7.5 times higher than the electron temperature. Accepting that the electron temperature is 2 eV (in Ref. [11] an estimate of the electron temperature is not given) we estimate the potential in the place where the other dust particle should be present is 3.75 eV. Accepting the minimum possible charge on the dust particle as $3 \times 10^3 e$, we find that the energy of interaction without screening is $Z_d \times 3.75$ eV ≈ 10 keV. This estimate once more emphasizes that Debye screening is very important as the obtained interaction, without screening, seems to be enormously large. Taking into account the Debye screening and also the fact that the Debye radius in Ref. [11] is somewhat less than in refs [5, 6] (approximately 2 – 3 times), one finds that the interaction energy is too small to satisfy the criterion [1] for transition to the crystalline state. An increase of dust kinetic energy due to a decrease in the neutral-gas friction (appearing in the case where the pressure of neutral gas is decreased) can be explained only if one supposes that the thermal dust fluctuations are suppressed by friction with neutrals, and that the charge fluctuations, or the interaction between charged dust particles, is the source of these fluctuations. If this is the case, a decrease in such interactions by 5 – 6 orders of magnitude, appearing due to Debye screening, also contradicts the observations. The only remaining possibility concerns more detailed dust-dust interactions at distances larger than the Debye radius (the references to recent papers in which such a consideration is made are given in the theoretical part of this review).

2.1.3 About the experiments of the Kiel University group‡. The experiments [12] are devoted to a direct measurement of the charge on dust particles in the plasma-dust crystal. The necessity for such measurements is dictated by several circumstances. Firstly, as was already mentioned, the dust component in the plasma volume cannot be considered as a weak perturbation to a preliminarily prepared plasma ($P \approx 1$) as it can substantially change the profile of the potential in the plasma, which itself determines the charge on the dust particles. Secondly, an increase in dust density should decrease the charge on the dust particles as particles would screen the plasma fluxes to the other dust particles. The role of fast electrons here increases due to the shadow effect, and they begin to accumulate in the plasma volume. Also, the presence of different electrostatic fluctuations accelerates the electrons and these non-thermal fast electrons can be present in the double layer in which the crystal is partially situated. Electrostatic fluctuations and electrostatic turbulence are detected in Ref. [11].

The direct measurement of the charge on dust particles in the plasma-dust crystal can answer the question concerning the charge equilibrium in real experiments, with many dust particles interacting. The scheme of experiment [12] is similar to that of Refs [5, 6] — the HF field frequency is 13.56 MHz, the ion density is also almost the same, $n_i \approx 2 \times 10^8$ cm^{-3}, and the relative contribution of dust component in the quasi-neutrality condition is not less than in [5, 6], which is related to the lower value of the dust density (approximately one order

† National University, Chungli, Taiwan 32054, ROC.

‡ Institut für Experimentalphysik, Christian-Albrechts-Universitat, 24098 Kiel, Germany.

of magnitude less than in [5, 6]), namely, $n_d \approx 1.4 \times 10^3$ cm^{-3}. Nevertheless, the directly measured charge on the individual dust particles appears to be 5 times larger: $Z_d \approx 10^5$, such that $n_d Z_d \approx 1.4 \times 10^8$. The charge was measured directly with the balance of the electrostatic and gravitational forces (more exactly by deviations from this balance) and by the resonance frequency determined by the ion density in the double layer.

The dust particles, 30 μm in diameter, injected into a plasma volume are larger than in the two experiments described earlier. This itself should increase the charge on the individual dust particle by 4.3 times (according to the OML approach); the observed increase of the charge was by 5 times. The Debye radius is measured to be 90 μm, 3 times larger than the dust size. Finally the lattice constant is 880 μm, exceeding the screening radius by a record number — approximately 29 times.

All of the above discussed questions in connection with the relation between the lattice constant and the screening radius are, in this case, much more serious. They will be discussed in the theoretical part.

2.1.4 About the experiments of the Oxford University group (UK)†. No experimental papers have yet been published by the University of Oxford, although several are currently being prepared. Early results [13] are available in which the parameters of the installation used are very similar to those described above. One remarkable difference from the previous experiments is the absence of any control on the size and morphology of the injected dust particles — the particles used are taken from a laser printer (toner) which has a very complicated structure (probably fractal) and range in size from 0.3 to 30 μm. The latter means that the charge obtained by the different dust particles will very considerably, which, one suspect, would alter the interactions between the particles. Despite this, a well ordered plasma- dust crystal is observed. This fact is itself a good indication of the development of self-organizing processes in which the local changes of the plasma surrounding the dust particles equalizes the dust interactions (obviously such a process should become energetically favorable). Nevertheless, the difference in suspended dust sizes is indicated by the interactions between the dust particles and the laser radiation. In other words, the crystal is indeed formed from dust particles of different sizes which is a rather interesting phenomenon.

It should be mentioned that, in the group of Chungli University, the sizes of the dust particles are also not controlled, but the measurements are made on the size of dust particles which actually take part in formation of the crystal. These sizes are, in the Chungli group, almost the same for all particles in the crystal.

One might expect a separation of dust particles of different sizes as the force of gravity acting on heavier dust particles is larger. This natural selection may also be present in the experiments of the Oxford group, but the interaction with the laser radiation shows that the sizes of dust particles do differ.

A more detailed experimental investigation of the interaction of laser radiation with dust-particles and dust crystals in a plasma is currently underway. Mono-dispersive particles are employed to quantify the effect, and ascertain its cause — radiation pressure, thermal forces, etc. At present, radiation pressure is the more likely cause.

In Ref. [13] the behavior of a plasma-dust crystal in the presence of low frequency potential oscillations, in both planar and perpendicular directions, are observed. Non-synchronous oscillations indicate the propagation of low frequency modes of the sound type. Dust convection in non-uniform fields is also observed, which will be studied in depth over the next year.

2.1.5 About the latest experiments of the Max Planck Institute for Extraterrestrial Physics (FRG). The aim of the experiments [14] is to investigate phase transitions in dusty plasmas, from the crystalline state to the state of complete disorder. Along the direction of the force of gravity there should exist both translational order and the orientational order. The corresponding translational and orientational pair correlation functions, according to Ref. [14], have a different behavior during the phase transitions. A decrease in the neutral gas pressure, as was already mentioned, increases the kinetic energy of dust particles, which they receive due collisions with neutrals. It is observed that the decrease of the translational order can be accompanied by an increase in the orientational order. An increase in crystal defects was also identified, which was accompanied by substitution fluxes of a convective type.

These investigations are the first of their kind into the process of self-organization in open systems. Of most interest is the recent investigation [15] analyzing the behavior of a small number of dust particles. Although one-dimensional crystals are impossible, the external potential barriers make it possible to organize the particles in such a way as to produce a chain of particles on which one can observe the Bloch type wave propagation. Similar experiments were performed with two dust particles which approach, over time, equilibrium positions with a definite distance between them. This distance was larger than the Debye radius but not so large that the external fields worked to confine them and define the equilibrium distance.

If the interpretation of these observations is correct they constitute an experimental proof of the existence of attractive forces between dust particles at distances larger than the Debye radius. For this interpretation to be correct it is necessary that the potential of the two dust particles, at distances much larger than the Debye radius, be of the molecular type, i.e. repulsive at small distances and attractive at large distances. Such potentials indeed appear and will be described below.

2.1.6 About the experiments of the High Temperature Institute group (Russia)‡. In experiments [16] macroscopically ordered systems were first observed in plasmas of Ne. The characteristic features of the observations are that the structures appear only in regions with high electron temperatures and high electron densities. The average distance between dust particles was of the order of 300 μm which is somewhat larger, but close to the inter-dust distance in the experiments of the Max Planck Institute for Extraterrestrial Physics.

A rather large charge on each dust particle, of the order of $Z_d \approx 7 \times 10^5$, is also observed, probably due to the relatively large size of dust particles (up to 60 μm — twice as large as in

† Department of Engineering Science, University of Oxford, UK.

‡ Scientific Research Center of Thermophysics of Pulsed Action, RAS, 127412 Moscow, Russia.

the experiments of the Kiel University group). The Debye radius is much less than the average inter-dust distance but close to the size of the dust particles (in some cases the Debye radius is even less than the size of dust particles). The observed structures are not exactly ordered, as in other experiments, which is probably related to the large inhomogeneities. The structures are observed in that part of the strata where the electron density is large, 10^9 cm^{-3}, which is close to the value of the electron density in the other experiments.

2.2 Plasma-dust clouds in plasma surface treatment

The number of experiments concerned with the treatment of the surfaces of materials using plasmas is very large. Topics include, among others, the coating of surfaces with thin films and plasma etching for the production of computer chips. The physical processes in these different experiments are quite similar. We consider here, in detail, the plasma HF etching conditions which, in the above, seem to be of the largest practical importance.

Investigation into the formation of dust clouds in the processes of plasma etching was started, only recently, in the works [17, 18], where laser scattering from dust in the discharge chamber was used for the detection of dust clouds levitating above the etching wafers. The first proof that such a dust clouds could in fact be plasma-dust liquid drops was given in Ref. [19]. Of drops we have in mind states similar to plasma-dust crystals but in a liquid state rather than crystalline.

In Ref. [20] it was shown that the etching products injected, during etching, into the plasma volume, can also form layered structures in which each layer is some kind of 2D plasma-crystal. The structure and the particle separations, however, may vary from one layer to another such that the size of the dust particles decreases with height. In a sense these works are similar to those on plasma-crystals but the density of dust appears to be much higher; the dust is formed naturally; and all of the problems have specific practical hindrances — few possibilities for changing devices and difficulty in performing diagnostics. The formation of these structures is inevitable and undesirable as a natural contamination in the production procedure. We will give only a general description of the problem and shortly discuss the three mentioned works as having principal importance, not only for etching, but also for many other experimental devices in which the low-temperature plasmas come into contact and interact, with the surfaces surrounding a discharge volume.

2.2.1 A general review concerning the formation of dust particles in low-temperature plasmas and in experiments on plasma etching. The first discovery of the presence of dust particles in the low-temperature plasmas of gas discharges was made far back, in 1924, in a pioneering work of Langmuir [21]. The most detailed and recent investigation into the role of dust particles in positive columns of gas discharges was performed in Ref. [22].

At the present time it is confirmed that most low pressure plasma discharges contain a relatively large, well confined dust component. This confinement is due to the appearance of negative charges on dust particles which approach the floating potential, as well as to the presence of negative charge on the walls of the discharge chamber. The appearance of the latter has the same cause. The potential barrier between the volume and the walls for electrons is approximately T_e (in energy units), but for dust particles with a charge $Z_d e$ this potential barrier will be $Z_d T_e$. As a rule, the dust particles quickly lose their kinetic energy in collisions with neutrals, the density of which in low-temperature plasma is usually 5 – 6 orders of magnitude higher than the density of electrons or ions. The condition for dust confinement, $Z_d T_e > T_n \approx T_i$, is rather well satisfied in gas discharges.

The source of dust particles is the evaporation of macroparticles from the surface of the discharge chamber. (This serves as a source of dust particle in any discharge, not only those invented for etching, though for etching this source is very effective.) The rate of dust injection depends substantially on the properties of the surface — its chemical composition and temperature, among other parameters. These parameters can change over the duration of discharge.

The difference in the behavior of dust particles between the DC discharge and AC HF discharge used in industrial etching is not very significant as the frequencies usually used are of the order of several tens of MHz. At these frequencies the dust particles do not have time to react to the rapidly changing HF field. The HF field force is usually small compared to the DC electric field force.

In the process of etching there exist two sources of dust particles. The first source is related to an over-saturation within the volume of the discharge of vapors of the materials used for etching. This creates macro-particle drops by sublimation. As a rule, in chemically active mixtures dust particles may be born from chemical reactions. Another source of dust particles is the process of etching itself.

Let us describe in a very rough and simple manner the principle of the etching mechanism used in most of the industrial installations for the formation of computer microschemes. As was mentioned earlier, the double layer formed in a gas discharge close to the wall (and also close to the wafer which is used for etching) repels the electrons and accelerates the ions. The ions traversing the double layer cross the potential difference of the order of the electron temperature, which is much higher than the ion temperature, i. e. the ions receive energy comparable with electron temperature.

The sample for etching has a mask and the ions (of the naturally appearing ion flux) approaching the sample, bombarding it, should create a local temperature of the order of that necessary for welding the material of the sample. This inevitably leads to evaporation and injection of non-spherical fragments of etching into the plasma volume.

The physics covering the appearance of the ion flux is the same as that which leads to the formation of the double layer and the levitation of dust particles. Also, the process of electrode erosion (electrodes are usually made from metals or graphite) contributes to the injection of macro-particles into the plasma volume.

Laser scattering can be used to detect the dust particles from the size of 0.01 μm, but practically, the most widely used method for the detection of dust particles starts from the size of 0.1 μm. One can follow, starting from this size, the evolution of the dust particles and answer the question of whether they are growing or not. The general answer is that they are almost always growing but the stage of growth depends on the rate of injection of new dust particles and the agglomeration of smaller particles into larger ones. Usually, the etching time is sufficiently long to observe the dust particles growing to a size visible to the naked eye (up to 10^3 μm).

The mechanism of growth of dust particles is not well understood, but obviously it is the recombination of electrons

and ions that leads to the deposition of material onto the surfaces of the dust particles. This process is an inevitable factor related to the ion and electron fluxes appearing from the adjustment of the potential of the dust particle to that of the floating potential which leads to the appearance of charge on the dust particles. The ion thermal flux, according to the OML approach, is approximately $2.1 \times T_e/T_i \approx 10^2$ times larger than the geometrical ion flux, and is sufficiently high to explain the observed rate of dust particle growth at stages where agglomeration is not effective. This rate is of the order of seconds, and for etching processes taking a long time, the time interval of 1 s is rather short. The observations indicate that after such durations from starting of the etching process, the measured dust density is already up to 10^8 cm^{-3}, with dust particles sizes of about 0.1 μm. This value of the dust density is at least four orders of magnitude larger than in the experiments on the plasma-dust crystals. Therefore, the ratio of $n_d Z_d$ to n_e is much higher than that of the previously discussed experiments on plasma-dust crystals, $P \approx 10-10^2$, such that the collective effects introduced by dust are much stronger. One can expect that, in this case, the concept of an independent charging of dust particles is not quite appropriate. The subsequent growth of a dust particle can appear as an interchange between the processes of material deposition and dust particle agglomeration. A detailed physical understanding of these processes is still absent. It is only known that the dust particles always continue to grow; that they can become, in some stages, perfectly spherical, starting from completely nonspherical shapes, and can, in other stages, form fractal-like structures, probably due to dust agglomeration. These fractal structures often look like cauliflowers (see Fig. 1). Most experiments find the appearance of such structures in the final stages of etching. The process of agglomeration, which can lead to formation of such structures, is still a puzzle since the presence of dust charges should, at the first glance, prevent agglomeration.

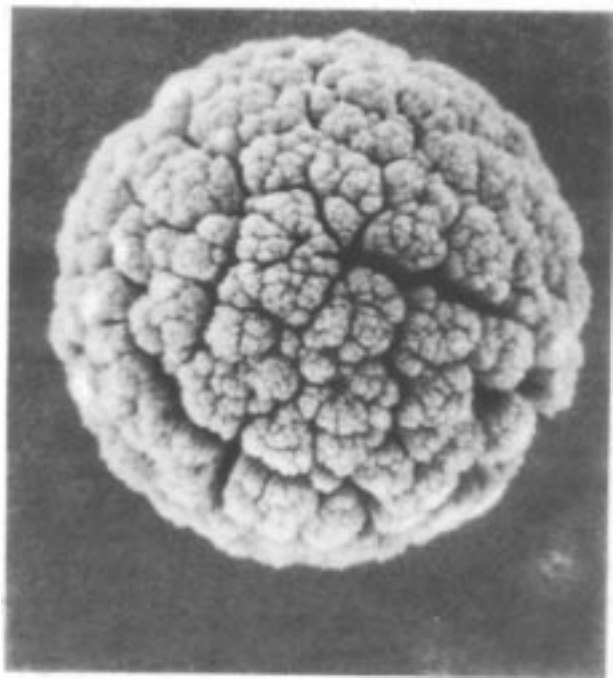

Figure 1. Photograph of a dust particle, obtained by low voltage scanning electron microscopy. The dust particle was grown in a helium plasma with graphite electrodes, using an HF discharge of 15 MHz and a pressure of 1 torr [25].

It should be mentioned that an increase in dust size increases the charge on a dust particle, and at close distances (the Coulomb repulsion is proportional to the square of the charge of the two interacting dust particles) one should expect that other, non-electrostatic, forces should be included. In the theoretical part, we will try to give examples of such attractive forces and to explain the phenomenon of agglomeration.

Up to the present time only a single explanation has been proposed for agglomeration. It is also possible to show that, in open systems, agglomeration is energetically favorable. All this will be discussed in the theoretical part, but here we should mention a practical aspect of the problem, that agglomeration is the main obstacle in the production of computer micro-schemes of necessary quality, and is, at the present time, the main problem in the further miniaturization of computers. The latest results concerning the struggle with this problem are given in Ref. [23].

In the experimental conditions of the continuous growth of dust particles and their continuous injection into a discharge chamber, the density of dust particles reaches such a value that the collective processes become dominant and the correlations of dust particles become strong. One can consider the possibilities of the formation, in these conditions, of plasma-dust liquid drops and plasma-dust crystals. But the situation becomes more complicated as the charge on dust particles grows with the first power of the dust size, and as the mass of particles grows with the cube of their size. Because of this, the heaviest particles would be concentrated near the lower layer closest to the etching wafer.

The main question is whether the largest particles will continuously fall on the wafer as soon as their sizes becomes large enough and they become heavy enough not to be levitated in the field of the electric double-layer above the wafer, or whether the subsequent dust layers can 'support' the lower ones if the structure is of a crystal type, until suddenly the whole structure falls onto the wafer. In the first case, the contamination is continuous, but in the second case, it is sudden and disruptive. With this in mind, the practical answers concerning contamination during etching depend upon an understanding of the dust-crystal properties as well as on an understanding of dust-dust interactions. At the present time, there does not exist a clear understanding of the physics of dust growth and dust interaction. The struggle against dust contamination is, at the present, only made by a post-etching assessment of wafers for quality.

One physical relation of interest is whether the mean dust separation in etching experiments is larger or smaller than the Debye radius — a question which can be answered with our present knowledge of etching data. Here, it is necessary to emphasize the large difference between the experiments on plasma etching and those of plasma-dust crystal formation, although some phenomena are common to both. The main difference is in the much larger dust density in the etching experiments. In the case where the dust density is of the order of 10^8 cm^{-3} (as it is the case in some of the experiments described above), the average distance between the dust particles is $\delta = (3/4\pi n)^{1/3} \approx 10$ μm, while the Debye radius is about 50 μm, i.e. the Debye radius is much larger than the inter-dust distance — opposite to the conditions where the plasma-dust crystals are formed. The criteria (1.3), for etching, is also not fulfilled, which means that the Debye radius is equal to the ion Debye radius. There are some

etching experiments where the inter-dust distance is comparable to the Debye radius, but on average, the relation between them is opposite to that for plasma-dust crystals.

One unresolved problem is whether the observed dust structures have free boundaries or not. There is more evidence for the first possibility than for the second. One should have in mind that the ambipolar double-layer field exists only close to the walls of the discharge chamber, which can help with confinement. The free boundary structures should therefore be somewhat separated from the walls, as is usually observed.

Complications arise from the rather complex structure of the distribution of ionization rate by HF fields, which makes rather uncertain the conclusion that the observed structures have free boundaries. For free boundaries to exist, it is necessary for some kind of surface tension to be present. The latter should be related to dust attraction which should be present, both in the case where the average distance between the dust particles is less than the Debye radius, and where the opposite is true. We will discuss these problems in the theoretical part. One should also have in mind that though the average distance between dust particles inside the dust cloud may be less than the Debye radius, in the outer part of the cloud it may be larger than the Debye radius.

Only in exceptional cases do etching processes create dust clouds with a regular spacing of dust particles. Due to the strong interaction between dust particles, experimentalists are in agreement that the observed clouds in etching experiments correspond to plasma-dust liquid drops. From the point of view of observations, the structures observed are indeed similar to liquid drops levitating above the etching sample. Since the average distance between the dust particles is less than the Debye radius, it seems to be more appropriate to use the Monte Carlo numerical simulation results [1] for a strongly correlated system, although the problem of how one applies the results of the OPC to the system which is, in principle, multi-component, still remains. Nevertheless, at distances less than the Debye distance, the electrostatic interaction is only Coulomb, and this gives some argument for using [1], although, as we will see in the theoretical part, the interaction with the neutral component of the gas is also very important and can lead to dust attraction. Postponing the consideration of the neutral component, we will estimate here only the electrostatic interactions and find whether criterion [1] is fulfilled.

According to experimentalists' opinion, the charge on the dust particles in etching experiments (although their density is high) is not less than the value given by the OML approach, which is $Z_{\mathrm{d}} \approx 10^2$. This implies that the parameter $\Gamma = Z_{\mathrm{d}}^2 e^2/\delta T_{\mathrm{d}} \approx 50 < 170$. Usually, according to Ref. [1], the experimentalists consider the case $1 \ll \Gamma < 170$ as a system of strongly interacting particles where the interaction is not sufficient to form a crystal but sufficient to form a liquid. From this point of view the concept of liquid drops as a model of plasma-dust clouds observed in etching experiments is the proper model to understand the observed phenomenon. But the main problems remain — whether the drop is separated from the walls, and what the nature of surface tension is? A liquid drop can only form in the presence of surface-tension. There is also the question of weather the drop has a free boundary. None of these problems can be solved before the forces introduced by dust interaction with neutrals (see below) are understood.

Recent experimental results on dust structures observed in etching experiments are collected in Ref. [23]. In most cases, the surfaces of plasma-dust structures are separated from the walls which may indicate that these structures have free boundaries.

We will stop the discussion at this point, however, as the aim of this review was merely to explain the similarities and differences between the different types of dust structures observed in the different experiments. We will consider now, in more detail, those experiments which shed some light on the principle physical questions:

(1) Do the dust structures have sharp boundaries?

(2) Are they plasma-dust liquid drops?

(3) Under what conditions do these structures become dust-crystal–like structures?

2.2.2 About the experiments of the IBM group (USA)†. Experiments [17, 18, 24] were the first to outline the problems of natural wafer contamination due to dust structure formation, in the process of etching. Industrial technologies require clean vacuums during the etching of wafers to avoid dust contamination. For this reason, production is made in clinically clean compartments which prevent the precipitation of any dust. In Refs [17, 18] it was pointed out that the process of etching itself may naturally lead to the appearance and growth of macro particles over time, spoiling the quality of the etching wafers.

Starting from papers [17, 18, 24], laser scattering diagnostics are used to determine the form and structure of the dust clouds as well as to determine the size of the dust particles. The latter can be performed only partially, providing only qualitative answers.

In Ref. [26], another important conclusion is reached — that most industrial installations are, in fact, traps for dust particles. This conclusion was obtained phenomenologically due to the absence of any success over many attempts to remove the dust structures from the discharge volume, either by using devices similar to vacuum cleaners or, among other methods, by using flowing gases in which the dust particle are dragged. The main conclusion is that dust particles are continuously created above the etching wafers and that they are well confined there, forming quite stable and stationary dust clouds.

One question is whether this confinement is due to some collective effects related to dust such that these clouds are a self-organized structures? The results of Ref. [24], containing visual information in the form of films taken over the whole etching time, may provide answer to this important question. A qualitatively established result is that the dust particles are self-confined in localized spatial domains, which finally fall down before the end of the etching, leading to the contamination of the wafer. Consequently, it is reasonable to assume that the observed dust structures have the nature of dust liquid-drops or of dust clouds which can be self-localized in certain spatial domains in a way which is deeply related to the structure of the etching wafers. It is proven that the localization is a direct consequence of the presence of plasma, as it is absent in neutral gases. It is clear that except for forces known to act in neutral gases (related to temperature-gradients, neutral drag, gravity, and turbulence), in the presence of plasmas other effects (related to the large dust charges and to the processes which maintain these charges) become important. We will discuss them in the theoretical part, in addition

† IBM Research Division, New York, USA.

to new dust-dust interactions due to neutral capture and emission by dust particles.

Here, we present photograph illustrating a large concentration of dust in the form of regular structures. These structures are determined by the form and geometry of those defined by the etching wafers. Figure 2 shows one of these structures obtained by means of laser scattering, reminiscent of planetary rings.

Figure 2. Photograph of a dust cloud above three closely packed silicon wafers placed on a graphite electrode. The photograph was obtained by raster image laser scattering.

In most cases, the observations divide the dust distributions by sizes. Dust particles of almost equal size are observed only for short discharges. In the case where the walls are creating an appreciable quantity of dust particles, one observes a wide distribution of dust sizes, while for short discharges with volume creation and growth of dust particles there is only a narrow distribution of dust sizes. In the case of a round wafer, one often observes two dust clouds with sharp edges, close to the lower and upper electrodes, corresponding to the two double layers formed — the lower cloud being thicker. The lower electrode serves as a wafer.

The clouds have the form of rings which indicates that, in the perpendicular direction (i. e. the direction of gravity), collective forces do indeed act. Similar pictures were obtained in the case where the lower electrode contains many wafers. The most effective traps for dust particles appear in-between the wafers, especially when they are closely packed. This transversal focusing cannot be explained without the help of collective effects.

Localization of the dust clouds is observed in practically all installations for etching, both in HF fields and electron cyclotron resonance fields, in magnetron etching and deposition. It should be mentioned that dust particle, being charged to repel each other, nevertheless form, in these localized traps, structures with a behavior similar to liquid drops. It seems to be certain that in the direction perpendicular to the electrodes, the boundary of the drops is free.

The puzzling phenomenon of the surface tension, required to form the drops, is needed to explain the observation that the drops can be confined in the perpendicular direction in presence of large repulsive forces between dust particles. The experiments suggest that the form and the size of the clouds are changes with the injection of additional dust particles, which is a manifestation of the presence of collective interactions. The clouds are localized at the inhomogeneities in the lower electrode, or wafer; this indicates that initially an electrostatic trap is present which confines single particles, but this confinement should disappear quickly in the presence of several dust particles if they repel each other. The force which is associated with the inhomogeneities of the lower electrode, leads to inhomogeneity of the lower double layer, but as the potential difference here is only of the order of the electron temperature. Thus the inhomogeneities can change the thickness of the double layer, probably by several times, but not by orders of magnitude.

The dust particles are separated from each other by a distance of at least $0.1d$ and a repulsive force acting on each of them is larger than the force related to the inhomogeneity of the double layer. This is the main puzzle of the observations. Consequently, other attractive forces are necessarily present.

We will continue this discussion after giving expressions for collective dust particle interactions in the theoretical part, where the attractive forces are discussed in detail.

2.2.3 About the experiments of Orleans University group (France)†. The most detailed investigation into the dynamics of dust particle growth in the first stages of gas discharge for etching, is performed in Refs [27, 28]. The initial size of the dust particles, from which the growth is followed, is 0.01 μm. Growth is recorded, continuing up to sizes of 0.05 μm. This stage is shown to be the agglomeration stage where the total mass of the dust particles was roughly constant, and growth is the result of agglomeration. During this stage, the density of dust particles decreases while the size of each dust particle correspondingly increases, with the total mass of dust particles being conserved. For dust particles of 0.01 μm in size, the OML approach gives the charge on the dust particles to be $Z_d \approx 10^2$. This charge is still large but can be, in fact, lower than that given by the OML approach for high dust density.

After this phase, which seems to be mainly an agglomeration phase, a new phase appears where the slow growth of dust particles is probably related to the deposition of material onto the surfaces of particles. In this stage, the growth in size of the dust particles is much slower. Initially, before the stage of agglomeration, the dust density reaches the value $n_d \approx 10^9$ cm^{-3} and is comparable with the ion density. At the end of the agglomeration stage, however, the dust density decreases but is still very high, $n_d \approx 10^8$ cm^{-3}. Further on, in the stage where the dust size slowly increases, the dust density slightly increases too, by a level of the order of $(1-3)\times 10^8$ cm^{-3}.

It is interesting that, in both stages, the size of the dust particles is still small compared with the Debye radius, but the inter-dust distance, at the transition from one stage to another, is of the order of the Debye radius. Also observed is a decrease in electron density with distances increase, which directly suggests that the electron charge has a tendency to be transferred to the dust particles.

The growth of dust particles is limited, experimentally, to sizes less than or equal to 0.23 μm (which does not mean that further growth is absent, but only that the observations are made only up to this stage). In addition to growth, the velocity distribution of the dust particles is measured. It is found to correspond to a thermal distribution with a thermal velocity of 0.02 cm s^{-1}. This makes it possible to estimate the parameter Γ, which is shown to be $\Gamma > 1$. This suggests that the observed dust structures are in the plasma-dust liquid phase.

† CNRS, UFN Sciences, Universite d'Orleans, France.

2.2.4 About the experiments of Iowa University group (USA)†. In experiments [29], stratified dust structures in horizontal layers are observed for the first time. Each layer has structures similar to plasma-dust crystals with dust particles of approximately uniform size. The largest particles collect in the lowest layer. This is explained in Ref. [29] by the balance between the electric force and gravity, as particles with larger sizes are heavier by the cube of their size, while the charge growth is only linear. Such effects are not important in the experiments described previously as the dust sizes in Ref. [29] are much larger than in Ref. [28]. On the other hand, the period of the observations in Ref. [29] is much larger than in Ref. [28].

In Ref. [29], the particles in each layer grew over minutes and the layers grew over hours up to sizes where gravitational effects become important. These observations are of interest for two reasons: firstly, that the observed structures are similar to plasma-dust crystals, and, secondly, by the way in which the dust particles fall on the lower electrode.

It was observed that the growth of the whole structure is interrupted by a sudden collapse of all layers onto the lower electrode (or etching wafer). An increase in HF power decreases the number of layers formed before the disruption.

The distribution of dust particle sizes was very broad, up to sizes of the order of 1 μm. The observations indicate that the agglomeration of dust particles occurs at a time when particles are levitating in plasma, i.e. during the stage where they have large negative charges. One should explain why the large dust charges do not prevent the agglomeration of large particles. Another important observation is that in the process of growth of the dust particles, a moment may be reached when the dust particles in the lower layers are not able to levitate more, and then not only the lower layers fall down, but the whole structure collapses.

2.3 Parameters of various cosmic dust structures

The dust has been known to exist and to play a role in cosmic plasmas for a long time [30, 31]. Active cosmic investigations by satellites and space missions make clear the role of dust in the many processes occurring in space: formation of stars and planetary systems, the quasars accretion, the formation of planetary rings and tails of comet, the solar wind. The dust is present in the magnetosphere and even in the upper and lower ionospheres. In the latter case, an additional source of dust comes from human pollution.

In the early stages of cosmic research, the role of the collective effects introduced by dust was ignored. Later on, the collective effects began to be investigated, but a full picture of them is still absent.

The first collective effects to be investigated were related to the electrostatic repulsion of dust [32 – 34], particularly to the role of dust in the determination of the thickness of planetary rings [35, 36]. The influence of dust on the plasma component began to be considered only recently, although the parameter P is, in many cases, large enough for these influences to become sufficiently important that they should be considered. For large values of the parameter P, the mean free path of the plasma particles (of the order of $1/n_{\mathrm{d}}\pi a^2$ or less), which interact with the dust appears to be comparable to the size of the dust cloud such that the external plasma fluxes are absorbed within the plasma cloud leading to a rather strong plasma dissipation, which cannot be neglected. In the theoretical part, the collective influence of dust on the plasma particles will be described in detail, as well as the collective dissipation related to the presence of dust. These constitute, however, only the first steps in the direction of a self-consistent treatment of dust and plasma particles.

For cosmic conditions, the self-gravitation of dust can be important, but the collective effects may be more important: they can lead to a new type of attraction between particles, which can compete with gravitational instabilities. Investigations into this area are also in the early stages. Consequently, the main new aspects of recent studies are a relatively large role of gravitational effects, including self-gravitation, and an increasing role of plasma dissipation in dust clouds, because of their large size. The gravitational effects are also important for equilibrium structures in dust clouds. Plasma dissipation was not often estimated for cosmic dust clouds, but this parameter is very important as the comparison between plasma mechanisms for dissipation in dust clouds with other mechanisms for dissipation, and can identify which type of interaction is more responsible for the self-organization processes and the formation of self-organized dust structures in space. We will concentrate our attention here mainly to the problems rarely discussed regarding to the cosmic dust clouds, namely, plasma mechanisms of dissipation, which can in certain conditions play a dominant role in dust self-organization.

2.3.1 About planetary rings. From 1979 to 1989, the cosmic missions gave a more or less complete picture of the planetary rings in our solar system: around the Saturn, Jupiter, Uranus and Neptune [37]. Many planetary rings exist around these planets. They have extremely complicated structures indicating the presence of strong self-organizing processes. At the present time plenty of literature exists concerning planetary rings, including monographs [38, 39] and reviews [40, 41].

All planetary rings contain dust particles with sizes ranging from 0.1 – 1 μm or less, up to 5 meters — these are boulders, not dust particles in the traditional sense. In physics, however, this 'sense' is related to certain relative values, one of which, in this context, is the ratio of dust particle size to the Debye radius. From this point of view, we consider a particle to be a dust particle if its size is less than the Debye radius. This means that the particles in the rings are the dust particles. For example, it is well known that the plasma in the region of Saturn's rings, which are the most famous rings in the Solar system, has a temperature ranging from 30 eV to 50 eV, and a density of the order of 3 – 10 cm^{-3}. For these parameters, the Debye radius is 12 – 30 m. Therefore, all particles in the rings are dust particles.

All particles are under the influence of both gravitational and electrostatic forces, but obviously for large particles, the role of gravitational forces is more important (for specific criteria, see below). It is necessary to take into account both the gravitational force from the central planet and that from the self-gravity. The charges received from the plasma by all particles smaller than the Debye radius are 'equal', because the charge on them is proportional to their size. Therefore, the charge on a meter-sized particles is of the 6 orders of magnitude larger than that on micron-sized particles.

The main mechanism of the dissipation of plasma particles in a dust cloud is dust particle absorption by dust particles, as dust charging is a continuous process, and although the largest particles may interact mainly gravitationally, this dissipation may be substantial even for largest

† Department of Physics and Astronomy, the University of IOWA, Iowa City, IA 52242, USA.

particles. It is possible that the absorption is determined by the largest particles or by the smallest particles, rather than being determined equally by particles of any size. What is true depends on the dust particle size distribution, which is well known only for several of the brightest planetary dust rings [23]. Contrary to the plasma-dust systems described above, which were more or less mono-dispersive in size, or the size of dust particles was varying, but not by several orders of magnitude, the planetary rings have a very broad, non-Gaussian distribution in size. Often this distribution follows a power law. Some of these distributions have physical characteristics determined by the largest particles and other by the smallest. For example, the dust density may be determined mainly by the smallest size, the dust mass density by the largest size, and the plasma particle mean free path by all sizes. Therefore, the dust size distribution (from observational data) is very important for estimates of the physical parameters within the rings.

We define the distribution function for dust particle sizes, $n_{\mathrm{d}}(a)$, $n_{\mathrm{d}} = \int n_{\mathrm{d}}(a)\,\mathrm{d}a$. Observations indicate that this distribution is a power-law with the index of distribution close to 3: $n_{\mathrm{d}}(a) = 2a_0^2 n_{\mathrm{d}}/a^3$, where a_0 is the minimum size of dust particles. The observations, in some cases, are able to check for the existence of meter sized particles down to micron sized or submicron-sized particles. For this distribution, we find that the above mentioned dependencies of the different dust cloud parameters on particle sizes are exact.

Another important feature of the dust clouds, forming the planetary rings, is that they are surrounded by an almost thermal plasma and in most cases, inside a dust cloud no source of ionization exists (although in several cases volume photoionization is present on the sunny side of the rings). Thus, in absence of photoionization, the recombination of electrons and ions on the dust particles is compensated by the external plasma flux, such that the value of the mean free path of the external plasma electrons and ions becomes important, $1/\int n_{\mathrm{d}}(a)\pi a^2\,\mathrm{d}a$, as is its comparison to the thickness of the ring.

Let us give, as an example, the data for the best known and most investigated planetary rings of Saturn. Of the rings which were investigated, the first, usually the brightest, are denoted by the letters A, B, C, D, in order of decreasing distance from the planet's surface (correspondingly from 136 to 122, from 118 to 92, from 92 to 74 and from 74 to 67 thousand kilometers). These rings are rather thin, of the order of 10 meters or less (this estimate is correct at least for dust, which does not vary considerably in size from the maximum). The thickness of the rings is apparently close to the Debye radius, and the maximum size of particles reaches 3 m.

The remainder of Saturn's rings are more distant from the planet and denoted by the letters F, G, E (distances about 140 and 170 thousand kilometers and from 181 up to 483 thousand kilometers from the surface of the planet). These rings are rather thick, about 100 kilometers for rings F and G, and about 10 thousand kilometers for ring E. The maximum size of the dust particles is, strictly speaking, not well known; it is usually assumed that it is of the order of $0.1-1$ μm.

For the inner rings, the ratio of thickness to radius is of the order of 10^{-6}. For the outer rings, this ratio is $10^{-3}-10^{-2}$. The particles of different sizes vary in distance from the equatorial plane. The gravitational field of the central planet controls the particle movement in the equatorial plane and they move in this plane on the Keplerian orbits. The same field in the direction perpendicular to the equatorial plane attracts the dust particles to the plane (the gravitational field component for particles deviating from the equatorial plane is proportional to z/R^3, where z is the height from the equatorial plane, and it changes sign with changes in the deviation from z plane). Opposing this attractive force are the pressure force due to the thermal dust motion and the electric repulsion force of the charged dust particles.

Radio-observations indicate that the surface mass density of the inner rings is of the order of 5 g cm^2. For a power-law distribution of sizes, the last value is determined by the particles of the largest size. For 5 m particles, we find the normalizing coefficient in the power-law distribution of dust particles to be $n_{\mathrm{d}}a_0^2 \approx 10^{-3}$ cm^{-1}.

For a power-law distribution, it is reasonable to use as a characteristic for the number of particles of a given size, the number of particles larger than the given size, a, namely

$$n_a = \int_a n_{\mathrm{d}}(a)\,\mathrm{d}a = \frac{n_{\mathrm{d}}a_0^2}{a^2}\,.$$

From this expression we obtain that the density of the dust particles of 0.3 μm in size (3×10^{-5} cm) will be 10^6 cm^{-3}, and the average distance between them will be 300 μm. Then, using the OML approach, we can estimate of the charge on these particles, $Z_{\mathrm{d}} \approx 10^4$.

The average distance between the dust particles is much less than the Debye radius, but the temperatures of the electrons are almost equal to those of ions, and the presence of a small amount of neutrals can influence the dust-dust interactions. By neglecting the neutrals we can estimate the electrostatic interactions with the parameter Γ.

We find that the criterion $\Gamma = Z_{\mathrm{d}}^2 e^2/T\delta \gtrsim 1$ is certainly fulfilled and, at first glance, the dust plasma state should be a liquid. Uncertainties related to this statement are due to following:

(1) One needs to take into account variations in the force of gravity with distance from the central planet. In the case where the gravitational energy changes over distances comparable to the average separation between particles, by more than the electrostatic energy of interaction, one can doubt the reliability of the estimation of Γ for the transition to the liquid state;

(2) The dynamics of neutrals and their influence on the dust-dust interactions, should be taken into account; and in the case where dust-dust interaction energy can be changed by neutrals (see below) by an amount comparable to the electrostatic energy of interaction, this effect also should be taken into account;

(3) The collisions between dust particles can create fluxes within dust size 'space', which also seems to alter the criterion for Γ.

All these questions are for future investigation. We restrict ourselves here to the estimation of the energy changes within the central planet's gravitational field for comparison with the electrostatic interaction field.

As the size of the dust particles increases, their density decreases with $1/a^2$, but $Z_{\mathrm{d}} \propto a$ such that $\Gamma \propto a^{4/3}$. With a decrease in the size of dust particles, the electrostatic energy of their interaction correspondingly decreases.

The change in the gravitational field of the central planet can be estimated in the following way (the Keplerian orbital motion of the particles in the equatorial plain can be excluded by considering the process in the co-moving frame of reference). For Saturn, the product of its mass M_{s} and G is

equal to 4×10^{22} cm^3 s^{-2}, and the distance from the center of the planet to the inner rings is of the order of $(1-2)\times 10^{10}$ cm. For a mass density of dust particles in a ring of 1 g cm^{-3}, we find that the size of the dust particles (for which the change in gravitational interaction over the average distance between the dust particles is of the order of the electrostatic interaction) is roughly equals to 1 μm. As the change of gravitational action is proportional to a particle's mass, and therefore is proportional to a^3, we find that the dependence of the change of the gravitational action with respect to the dust particle size, a, is sharper than for an electrostatic interaction ($\propto a^{4/3}$). This means that all dust particles with size of the order of, or larger than, 1 μm, are mainly regulated by gravity, while for dust particles smaller than a micron, the electrostatic interactions are of greater importance.

This estimation is rather rough however, and is made assuming that all particles have the same size, which in fact is not the case for a ring. Also, the role of neutrals is neglected. In addition, it is also necessary to take into account that: the parameter Γ decreases rapidly with a decrease in the size of dust particles; the applicability of criterion [1], for the multicomponent system, is questionable; with a decrease in dust size, the dust density rapidly increases; for high densities, the applicability of the OML approach is questionable; and finally, the minimum size of the dust particles within a ring is not well known from observations. Therefore, we can conclude that it is too early to make a definite decision about the state of the plasma-dust clouds in the planetary rings — whether it is in the form of a liquid or a gas.

One important parameter of the rings is the mean free path of the plasma particles, for which we can make a relatively accurate estimation. For Saturn's inner rings we find

$$\frac{1}{n_a \pi a^2} = n_{\mathrm{d}} \pi a_0^2 \ \ln \frac{a_{\max}}{a_{\min}} \approx 3\,\mathrm{m},$$

if $\ln(a_{\max}/a_{\min})$ is of the order of unity. Thus, the mean free path appears to be comparable in size to the thickness of the rings such that the depletion of the external charging flux for the dust particles in the rings should not take place. However, with a decrease in dust size, the thickness of the ring increases, as the light particles form a kind of 'atmosphere' above the heavy particles. Here, the small particles in the inner part of he ring 'feel' the plasma particle deficit, and charge to the values predicted by OML theory.

The measure of the decrease in electron density is the value of the parameter $P = n_{\mathrm{d}} Z_{\mathrm{d}}/n_{\mathrm{e}}$. In the presence of a distribution of dust particles in size, taking into account that $Z_{\mathrm{d}} \propto a$, we find that

$$P = \int \frac{Z_{\mathrm{d}}}{a} \frac{n_{\mathrm{d}}(a)}{n_{\mathrm{e}}} \, a \, \mathrm{d}a = \frac{Z_{\mathrm{d}}}{a n_{\mathrm{e}}} \, 2 n_{\mathrm{d}} a_0^2 \int \frac{\mathrm{d}a}{a^2} = \frac{Z_{\mathrm{d}}}{a} \, 2 n_{\mathrm{d}} a_0^2 \frac{1}{a_0} \ ,$$

which is determined by the minimum size of the dust particles, a_0.

Other constants are given from the observations, $n_{\mathrm{d}} a_0^2 \approx 10^{-3}$ cm^{-1}, and by OML approach, $Z_{\mathrm{d}}/a = 10^7 T$ cm-1, where T is measured in electronvolts. For $T = 10$ eV we have $Z_{\mathrm{d}}/a \approx 10^8$ cm^{-1}, and thus, for $a_0 \approx 10^{-4}$ cm^{-3} (1 μm) and $n_{\mathrm{e}} = 10$ cm^{-3}, we have $P \approx 10^8$. This is a very large value as practically all of the electrons would be attached to the dust particles, in the case where the mean free path is less than the thickness of the ring.

These estimates raise many questions not yet resolved as they suggest that the inner part of the ring may be screened by the plasma which charges the dust particles. Also, the structure between the inner and outer part of the dust ring may be very complex.

The general description of the above example of Saturn's rings indicates that, in spite of an exceptional progress in understanding the plasma-dust state in planetary rings, many physical parameters are still not easily obtained from observations. For this reason, it is desirable to find some general conclusion regarding the possible role of plasma processes in the self-organization of such structures.

The parameter which determines the rate of possible self-organization processes is the rate of dissipation, as in open systems it characterizes the ability of the system to form self-organized structures. One obvious form of dissipation is the dissipation of plasma fluxes, which from a geometrical point of view, are oriented from both sides in a direction toward the ring plane, and perpendicular to it. Being equal on both sides, they does not transfer momentum, but only energy to the ring system. These fluxes are dissipated on dust particles if the plasma particle's mean free path is less than, or of the order of, the thickness of the rings, which as we have shown, is just the case.

Another type of dissipation is related to the movement of dust particle along the Keplerian orbits. Collisions between these particles transfers them from one orbit to another. The collisions are inelastic, which gives some rate of dissipation, estimated in Ref. [37]. Our aim is to compare this rate of dissipation with the rate of absorption of plasma fluxes, which we call plasma dissipation.

Let us estimate the energy associated with plasma dissipation in Saturn's inner ring, A. As the plasma flux moves at the ion thermal velocity (the electron flux charges the ring as a whole, and decreases due the negative charge of the ring until the electron flux becomes equal to ion flux — similar to a single dust particle) and since, as it was shown, the mean free path of the plasma particles is equal to, or less than, the thickness of the ring, the plasma flux should be entirely dissipated in the ring, such that the dissipation rate is given by

$$\Sigma_{\mathrm{pl}} = \frac{1}{T} \frac{\mathrm{d}T}{\mathrm{d}t} = \frac{4 n_{\mathrm{e}}}{n_{\mathrm{d}}} \frac{v_{T\mathrm{i}} S}{V} \ ,$$

where S is the surface of the ring. A factor of 2 appears from the sum of the fluxes of electrons and ions, and another factor of 2 appears from the sum of fluxes from both sides of the ring. $V = Sh$ is the volume of the ring and h is the ring's thickness. For ring A, we find the estimate $S/V = 1/h \approx 2 \times 10^{-3}$, such that, for $n_{\mathrm{e}} \approx 10$ cm^{-3} in a hydrogen plasma with $T \approx 30$ eV, $v_{T\mathrm{i}} \approx 5 \times 10^6$ cm s^{-1}, while for an oxygen plasma of the same temperature, $v_{T\mathrm{i}} \approx 1.3 \times 10^6$ cm s^{-1}. The value $n_{\mathrm{d}} a_0^2 \approx 10^{-3}$ cm^{-1} is fixed from observations, but a_0 is still not well known. We find $\Sigma_{\mathrm{pl}} \approx 10^{11} a_0^2/h$. The value of h is also not well known for the minimum size of particles, but one assumes $a_0 \approx 10^{-5}$ cm and $h \approx 10^5$ cm, which seem to be the limiting values giving the minimum of the dissipation rate Σ_{pl}, we find $\Sigma_{\mathrm{pl}} \approx 10^{-4}$ s^{-1}. It is probably more realistic that the value of S_{pl} is somewhat larger than the given value. For example, supposing $h \approx 10m = 10^3$ cm, we obtain Σ_{pl} by two orders of magnitude larger.

The value of Σ_{pl} obtained can be compared with the value which we denote as Σ_{g}, which is due to gravity, The Keplerian motion, viscous dissipation during the differential rotation of

dust particles in the ring. According to Ref. [37], Σ_g is estimated to be 10^{-5} s^{-1}. In the case where Σ_g dominates the self-organization, it can be connected with gravity induced viscosity; in the opposite case, which seems to be more realistic according to the given estimate, the self-organization related to plasma effects will be dominant. Up to the present time, this point has not been recognized and its consequences have not been analyzed.

For Saturn's outer rings, we will give an estimate of their parameters according to Ref. [24]. For the E ring, the most remote ring, the density of dust is $n_d \approx (10^{-3} - 10^{-4})$ cm^{-3}, in the range of sizes of 10^{-4} cm. For these parameters $\Gamma \approx 5$, and dust charge is calculated using the OML approach. This may mean that the state of the plasma-dust cloud is a liquid. This estimation indicates that the OML approach is appropriate as the mean free path of the plasma particles for the charging of dust is approximately equal to $1/n_d a^2 \approx 10^{10}$ m, which is larger than the E ring's thickness (of the order of 10^7 m). However, the size distribution of dust particles is strictly speaking unknown, and the presence of large dust particles (of the order of tens of microns) is possible if the thickness of the ring for the absorption of dust particles is of the order of unity. In this case, $\Sigma_{pl} \approx 0.3 \times 10^{-7}$ s^{-1}.

For the G ring, the density of the dust particles is approximately one order of magnitude higher, and the parameter Γ is only 2 times less, and the conclusion that the plasma-dust system can be in the liquid state may be correct. The depth of plasma particle penetration is one order of magnitude less, but the thickness is 5 times less. For the outer rings we find $\Sigma_{pl} \gg \Sigma_g$, i.e., the self-organization should be related to the plasma processes.

In the F ring, the relative density of the dust is high, $n_d Z_d \approx 10 n_e$, i.e., the electrostatic lowering of the electron density should be substantial.

The rings of the Jupiter and the rings of other planets have properties more closely related to the properties of Saturn's outer rings, and for them $Z_d n_d / n_e \approx 10^{-3}$.

In most of the remote rings of the Saturn, and practically in all of the dust rings of the other planets, electrostatic interaction and thermal dust motion determine the structure of the distribution of dust particles perpendicular to the plane of the rings. For $\Gamma > 1$, the perpendicular structure is determined by electrostatic forces [37], and for $\Gamma < 1$, this structure is determined by the thermal dust motion [41]. The latter has been known for a long time.

The formulation of problems associated with plasma self-organization in the deeper relationship between the radial structure and the perpendicular structures will be discussed later, after the theoretical part of this paper. The most puzzling observation to be explained is the complex hierarchical structure of the rings observed in the radial distribution of dust particles.

2.3.2 About interstellar dust-molecular clouds. The existence of interstellar dust-molecular clouds was discovered in 1930 [42]. This dust was discovered, and is observed mainly by the scattering of the radiation of stars, and this method is thus most sensitive to dust particles comparable in size to the wavelength of visible light, 0.1 – 0.01 μm. The mechanisms for the formation of dust clouds in the interstellar medium is not well known, but they may be similar to those known in laboratory experiments — a stage of chemical growth followed by material deposition and agglomeration.

At the present time it is accepted that dust particles may serve not only for the recombination of electrons and ions, but also as a main source of molecular hydrogen. Molecular hydrogen is absorbed by the dust and is instrumental in dust growth; and leaving the dust particles, contributes substantially to the molecular component of the dust-molecular clouds. According to widely adopted theory, most young stars are born in dust-molecular clouds — by shock waves which serve as initial density fluctuations for gravitational self-contraction.

The origin of dust-molecular clouds is attributed to the thermal instability of the interstellar media [43]. The rate of cooling by means of bremsstrahlung in an optically thin plasma is proportional to the rate of collisions, and thus is proportional to the square of the density. Therefore, if the cooling begins to dominate, it leads to a further increase in density, which, in turn, leads to an increase of cooling. Thus, the interstellar media is separated into regions of hot plasma with temperature up to 100 eV, and cold clouds. The presence of dust allows for faster cooling as the dust being heated is effectively cooled by radiation losses [44, 45].

The temperature of interstellar dust-molecular clouds is very low, about 10 K, and therefore, the charge of the dust particles of micron size may be ascertained by the OML approach for a thermal electron distribution of the order of $Z_d \approx 10$. Unfortunately, there is no reliable data concerning the dust particles of larger size which can carry greater charge.

Ionization in dust-molecular clouds is produced by cosmic rays. Both the density and the velocity distribution of electrons are determined by the balance between their creation by cosmic rays, and recombination on the dust particles. For this process, it is very improbable that the electron distribution is thermal, and if it is a power-law one, which is more probable, the charge on the dust particles should be substantially higher, up to $Z_d \approx 10^2$.

Dust particles can collect even greater charges if one takes into account ionization by subcosmic rays, i.e., that component of the distribution which has energy less than the rest proton energy. The role of subcosmic rays in the process of ionization in interstellar dust-molecular clouds was discussed in Ref. [46], where it was shown that their role is very important, which additionally indicates that the charge on dust particles may even be substantially higher than the value estimated above.

The dust density of micron sized dust particles in dust-molecular clouds is not well known, but it is probably close to $n_d \approx 10^{-6}$ cm^{-3}, such that $Z_d n_d \approx (10^{-4} - 10^{-3})$ cm^{-3} and the electron density is of the order of $n_e \approx 10^{-3}$ cm^{-3}. This means that the dust charge density is comparable with the electron charge density. For a charge $Z_d \approx 10$, the parameter $\Gamma = Z_d e^2 / T\delta \approx 0.02$; but for larger values of dust charge, $Z_d \approx 10^2$, we have $\Gamma \approx 2.3$. This estimate indicates that the state of the dust-molecular clouds is probably gaseous. The inter-dust distance is approximately 10^2 cm, while the Debye radius is close to 10^3 cm, i.e., the latter is much larger than the average distance between the dust particles. Close to the edges of the dust-molecular clouds however, this ratio can be the opposite.

In contrast to the rings, the question concerning the screening of plasma fluxes to some of the dust particles by other dust particles does not arise, as the ionization by cosmic rays is a volume ionization.

3. New theoretical concepts and results of numerical simulations

3.1 Dusty plasma as an open system

Dust particles absorb plasma particles and plasma particles recombine on dust particles. For a plasma to exist in the presence of dust, either constant sources of ionization and/or plasma fluxes from outside of the dust cloud regions (i.e., from regions where the dust is absent) should be present.

In laboratory experiments, ionization is produced either by DC electric fields or by HF fields, as, for example, in most experiments on plasma etching and plasma surface deposition. In the planetary rings, plasma penetrates from the solar wind, which is not disturbed by the dust component, or from the near planet's plasma. With both a source and a sink of particles, the system is open and especially capable of self-organization and the formation of structures.

The complex structure of planetary rings can be related both to the plasma mechanisms of dissipation and to the processes of dissipation related to viscosity and differential particle rotation. Most likely, the plasma mechanisms lead to structures smaller than those induced by gravitation or differential rotation and viscosity, but this problem is open for future investigation. In plasma-dust crystals, it is the plasma mechanisms for self-organization which are mainly important.

Before starting to compare the role of different mechanisms for self-organization it is necessary to describe quantitatively the plasma mechanisms for dissipation which appear in the presence of dust particles, in more detail. The model, in which any plasma particle, which hit the surface of a dust particle, is attached to it and finally recombine on the dust particle, is used widely in the investigation of dust behavior in plasmas and dust charging. The influence of this process on the behavior of the plasma component has only been marginally investigated, although a dusty plasma is naturally a self-consistent system and it is inappropriate to take into account any process in one of its components and not to take it into account in another.

The influence of dust particles on the plasma component in a dusty plasma is one of the key effects in plasma dissipation and plasma self-organization. In reality, it is possible that not every plasma particle which strikes the dust particle's surface attaches to it. In this case, however, one can introduce an attachment coefficient which will alter the results by a numerical coefficient of the order of unity and, at the present stage of investigations, this numerical coefficient is not so important and, in fact, can be taken into account by renormalizing the effective size of the dust particle.

Very often, plasma particle attachment can be described by the OML approach, as was mentioned and used above. For completeness, we will describe this method briefly. In this approach, two assumptions are made:

(1) Independently of the structure of the electrostatic potential in plasma near the dust particle, any plasma particle which initially is far from dust particle, can reach the surface of the dust particle, and if it is allowed by conservation laws, and will attach to the dust particle;

(2) For spherical dust particles, the limiting impact parameter of a plasma particle [when the plasma particle is absorbed (attached) by the dust particle] corresponds to a tangential trajectory to the dust particle.

An advantage of such an approach is that the cross-section of the plasma particle attachment can be found using the energy and momentum conservation laws only, independently of the complexity and nonlinearity of the plasma potential close to the dust particle.

Let us denote, by p^{cr} the critical value of the impact parameter of the plasma electrons and ions with the subscripts e and i, using for electrons and ions respectively. For a critical value of the impact parameter, the plasma particle tangentially approaches the surface of the dust particle. For an impact parameter larger than the critical value, the plasma particle does not strike the dust particle.

If a is the radius of the spherical dust particle, the conservation of angular momentum can be written in the form:

$$m_{\mathrm{e,i}} v_{\mathrm{e,i}} p^{\mathrm{cr}}_{\mathrm{e,i}} = m_{\mathrm{e,i}} v^{\mathrm{g}}_{\mathrm{e,i}} a\,, \tag{3.1}$$

where $v_{\mathrm{e,i}}$ is the velocity of the plasma particle far from the dust particle and $v^{\mathrm{g}}_{\mathrm{e,i}}$ is its velocity just near the surface of the dust particle. The conservation law of energy gives:

$$\frac{m_{\mathrm{e,i}} v^2_{\mathrm{e,i}}}{2} = \frac{(m v^{\mathrm{g}}_{\mathrm{e,i}})^2}{2} - e_{\mathrm{e,i}}(|\phi_0| + \phi)\,, \tag{3.2}$$

where $\phi_0 < 0$ is the electrostatic potential on the surface of the dust particle, ϕ is the potential far from the dust particle, and $e_{\mathrm{e,i}}$ is the charge of the electrons and ions respectively ($e_e = -e, e > 0, e_{\mathrm{i}} = Z_{\mathrm{i}} e > 0$). For a single dust particle, without losing generality, one can assume that the potential far from the dust particle is zero. This gives the cross-section for non-elastic collisions (attachment collisions) between plasma particles and dust particles, in the following form:

$$\sigma_{\mathrm{e}} = \pi (p^{\mathrm{cr}}_{\mathrm{e}})^2 = \pi a^2 \left(1 - \frac{2e|\phi_0|}{m_{\mathrm{e}} v^2_{\mathrm{e}}}\right), \tag{3.3}$$

$$\sigma_{\mathrm{i}} = \pi (p^{\mathrm{cr}}_{\mathrm{i}})^2 = \pi a^2 \left(1 + \frac{2Z_{\mathrm{i}} e|\phi_0|}{m_{\mathrm{i}} v^2_{\mathrm{i}}}\right). \tag{3.4}$$

The cross-sections of elastic collisions of electrons and ions with dust particles, which correspond to impact parameters larger than the critical one, are of the same order of magnitude. The cross-section of inelastic collisions can be used for the calculation of electron fluxes, ψ_{e}, and ion fluxes ψ_{i}, absorbed by dust particles,

$$\psi_{\mathrm{e}} = 2\sqrt{2\pi} n_{\mathrm{e},0} v_{T\mathrm{e}} a^2 \exp\left(-\frac{e|\phi_0|}{T_{\mathrm{e}}}\right), \tag{3.5}$$

$$\psi_{\mathrm{i}} = 2\sqrt{2\pi} n_{\mathrm{i},0} v_{T\mathrm{i}} a^2 \left(1 + \frac{Z_{\mathrm{i}} e|\phi_0|}{T_{\mathrm{i}}}\right). \tag{3.6}$$

The change of the charge on the dust particles is determined by the balance of these fluxes,

$$\frac{\mathrm{d}Z_{\mathrm{d}}}{\mathrm{d}t} = \psi_{\mathrm{e}} - \sum_{\mathrm{i}} Z_{\mathrm{i}} \psi_{\mathrm{i}}. \tag{3.7}$$

In equilibrium, for singly charged ions $\psi_{\mathrm{i}} = \psi_{\mathrm{e}}$, that gives the equation for the potential on the surface of a dust particle and, therefore, the equation for the equilibrium charge on the dust particle,

$$\exp\left(-\frac{e|\phi_0|}{T_{\mathrm{e}}}\right) = \frac{v_{T\mathrm{i}}}{v_{T\mathrm{e}}} \left(1 + \frac{e|\phi_0|}{T_{\mathrm{i}}}\right)(1 + P), \tag{3.8}$$

where P is a dimensionless parameter, which characterizes the ratio of the electron charge on the dust particles (per unit

volume) to the charge of the free electrons (same units) under the equilibrium condition [48],

$$P \equiv \frac{n_{\rm d} Z_{\rm d}}{n_{\rm e,0}}. \tag{3.9}$$

From the condition of quasi-neutrality, it follows that $n_{\rm i,0} = n_{\rm e,0}(1+P)$. The charge $Z_{\rm d}$ and the surface potential ϕ_0 are related to each other. In the case where, for estimates, one can use the vacuum relation between these values, $eZ_{\rm d} = a|\phi_0|$, one can find an equation for the dimensionless equilibrium charge on the dust particle, z, defined as

$$z \equiv \frac{Z_{\rm d} e^2}{a T_{\rm e}}. \tag{3.10}$$

This equation can be derived from Eqn (3.8) and has the form [49]:

$$\exp(-z) = \frac{(1+P)(\tau+z)}{\sqrt{\tau\mu}}, \tag{3.11}$$

where,

$$\tau \equiv \frac{T_{\rm i}}{T_{\rm e}}, \tag{3.12}$$

and

$$\mu \equiv \frac{m_{\rm i}}{m_{\rm e}}. \tag{3.13}$$

Most experiments on plasma-dust crystals have been performed with heavy ions of noble gases such as Ag, Xe, Kr, and the ratio (3.13) is rather large, but the charge on the dust particles depends on this ratio only logarithmically. Also, in most laboratory experiments, the ratio τ is rather small, of the order of 10^{-2}. For a hydrogen plasma and $T_{\rm e} = T_{\rm i}$, $P \ll 1$, the solution of Eqn (3.11) is $z = 2.5$.

From the given expressions it is clear that the fluxes, both of the electrons and ions, are determined by the ion thermal velocity. The rate of dissipation is determined by the energy dissipated on the dust particles. Using the cross-sections (3.3) (3.4) and Eqn (3.11), we find the energy dissipated on a single dust particle to be $\psi^E = \psi^E_{\rm e} + \psi^E_{\rm i}$, where the upper script E is used as indication of the energy dissipation and the lower index is used for electrons and ions,

$$\psi^E = \sqrt{8\pi}\frac{T_{\rm e}^2}{T_{\rm i}}\, v_{T{\rm i}} n_{\rm i} a^2 (z^2 + 2z + 2\tau z + 2\tau + 2\tau^2). \tag{3.14}$$

The flux of the energy, ψ^E, by the order of magnitude, is determined by the thermal ion flux to the surface area, πa^2. The effective surface area is larger than πa^2: when the ions are attracted by the dust particles they are collected from a surface much larger than the geometrical dust surface.

In etching experiments, $T_{\rm e}/T_{\rm i} \gg 1$ such that the energy flux to the dust particles is substantially larger than the thermal ion flux to the geometrical dust surface. For planetary rings and interstellar dust clouds, $T_{\rm e} \approx T_{\rm i}$, and the energy flux for hydrogen plasma, for $P \ll 1$, is $\psi^E \approx 31(\pi a^2 T n_{\rm i} v_{T{\rm i}})$. Multiplying n_d by this value, we obtain the energy in 1 cm^{-3} of dusty plasma. In laboratory plasmas, with volume HF ionization, this energy is taken from HF fields. In Ref. [44], it was shown that the fluxes (3.5), (3.6), multiplied by $n_{\rm d}$, exactly correspond to the rate of HF field ionization. In the presence of such a balance there exists an exact proof that the stationary dusty plasmas are the open systems, which are most appropriate for the development of self-organization processes.

The rate of dissipation, $\Sigma_{\rm pl}$, in the presence of volume ionization, can, to a certain approximation, be written as the ratio of the dissipated energy to the energy per unit volume,

$$E = n_{\rm n} T_{\rm n} + n_{\rm e} T_{\rm e} + n_{\rm i} T_{\rm i} + n_{\rm d} T_{\rm d}\,.$$

We will write this expression in a form which is useful for both laboratory experiments and astrophysics,

$$\Sigma_{\rm pl} = \frac{\psi^E n_{\rm d}}{E} \approx \omega_{\rm pi} P R\, \frac{a}{d_{\rm i}} f(\tau, z), \tag{3.15}$$

where,

$$R = \frac{n_{\rm i} T_{\rm i}}{n_{\rm n} T_{\rm n} + n_{\rm e} T_{\rm e} + n_{\rm i} T_{\rm i} + n_{\rm d} T_{\rm d}}, \tag{3.16}$$

$$f(\tau, z) = \frac{z^2 + 2z + 2\tau z + 2\tau + 2\tau^2}{z\tau}, \tag{3.17}$$

and $n_{\rm n}$ and $T_{\rm n}$ are the density and temperature of the neutral component, respectively.

In laboratory experiments, the temperatures of ions and neutrals are approximately equal, close to 0.02 eV, while the electron temperature is of the order of several eV. The degree of ionization, however, is small (approximately 10^{-6}) and the energy content of the neutral component dominates. In interstellar clouds, the temperatures of all components are approximately equal, but the degree of ionization by cosmic rays is small and, again, the main energy content is in the neutral component. Therefore, in both examples, $R \approx n_{\rm i}/n_{\rm n}$.

For laboratory experiments $\tau \approx 10^{-2} \ll 1$ and $f \approx (z+2)/\tau \approx 400$, $R \approx 10^{-6}$, but the plasma ion frequency is rather large (for Ag $\omega_{\rm pi} \approx 7 \times 10^6$ s^{-1}). Therefore, $\Sigma_{\rm pl} \approx 400 aP/d_{\rm i}$ s^{-1}, $P \approx 10$. This estimate indicates that for $a/d_{\rm i} \approx 1/10$, the processes of self-organization can develop in a time of the order 10^{-2} s, while the time of experiments are much longer.

In interstellar clouds $f \approx 7$, $n_{\rm i}/n_{\rm n} \approx 10^{-7}$, $P \approx 10^{-3}$, $\omega_{\rm pi} \approx 43$ s^{-1} and thus the process of self-organization requires hundred of millions of years. If, on the other hand, one takes into account that the star formation occurs in the regions of high compression by shock waves, the self-organization processes need only millions of years which is known to be short compared to the presently accepted time of star formation. This plasma self-organization can probably create the small scale, pre-star condensations.

In planetary rings, the main energy is dust energy such that $f \approx 7$, $R \approx 1$, but the dust density is rather high making the summation of dissipation on individual dust particles rather inappropriate. A better estimate can be found from the total thermal ion flux in the direction perpendicular to the plane of the rings, as was made above. According to those estimates, self-organization can develop in 10^4 s. It should be noticed that, for a flat layer, the increase of ion flux is absent.

Here, at the end of this section, it is necessary to discuss the limits of the applicability of the OML approach. The numerical 3D simulation by super particles [50], shows a close coincidence between the numerical results of dust charging and those obtained by the OML approach, if $a \ll d$. The latter suggests that, in the case of 3D plasma particle motions, the strong nonlinearities close to the dust particles allow only a small number of ions to reach the dust particle (the electrons, both from a theoretical point of view and from the results of numerical simulations, have a Boltzman distribution).

One should also have in mind that the electrostatic energy accumulated on dust particles can be rather large [51],

$$\frac{W_E}{n_e T_e} \approx Pz. \tag{3.18}$$

As $z \approx 2$ and as, in laboratory etching experiments and planetary rings, $P \gg 1$ (often), a dusty plasma can be considered as an accumulator of plasma energy [46].

Although a general conclusion that dusty systems are very suitable for the development of self-organization processes can be established by the simple estimates given above, to follow the chain of all such self-organized processes, including a set of new nonlinearities, is not a simple task. Up to the present time, only fragments of this chain have been investigated. We will discuss these fragments as they seem to shed light upon the whole problem and themselves represent a new theoretical concept which will help to solve this general problem.

3.2 Non-exponential (non-Debye) screening of the field of dust particles

As a consequence of the openness of a system, the charge of dust particles is not screened in the usual way by an exponential factor [52], i. e. the electrostatic potential is not a usual Yukawa type of potential given in Ref. [3]. It should be mentioned that the nonlinearity in the plasma particle distribution around the dust particle can appear only at distances less than the Debye radius, and at distances of the order of, or larger than, the Debye radius, the linear approximation for screening is sufficient. Nevertheless, the openness of the system, as we will show, creates an additional large scale field with a power-law decrease in distance, which results in the existence of a large scale repulsion of dust particles. This effect is completely due to the presence of plasma fluxes to dust particles, i.e. it appears only in open systems.

To find an explicit expression for the electrostatic potential of a dust particle at distances much larger than the Debye radius, we will use the conservation laws for angular momentum and energy, but for finite distance from the surface of the dust particle. In this section, we denote, by $v_{e,i}$, the electron and ion velocities, not at large distances from the dust particle as before, but at a distance r from its center; by θ, we denote the angle between the velocity direction of an electron or ion at the point $\mathbf{r}$ and the direction from this point, towards the center of dust particle; $v^{g}_{e,i}$ is the velocity of an electron or ion, which tangentially touches the surface of a dust particle.

Plasma particles, with angular momentum $vr\sin\theta$ less than the critical value of the angular momentum, $v^{g}_{e,i}a$, will be absorbed by the dust particle. From the energy conservation law,

$$\frac{m_{e,i}\, v^2_{e,i}}{2} + e_{e,i}\phi = \frac{m_{e,i}(v^{g}_{e,i})^2}{2} - e_{e,i}|\phi_0|, \tag{3.19}$$

we find the range of angles in which the plasma particles move only towards the dust particle. This range is given by the inequality

$$\sin^2\theta < \frac{a^2}{r^2}\,\frac{(v^{g}_{e,i})^2}{v^2_{e,i}} = \frac{a^2}{r^2}\left(1 + \frac{2e_{e,i}(|\phi_0| + \phi)}{m_{e,i}v^2_{e,i}}\right), \tag{3.20}$$

where the distribution of plasma particles close to the dust particles is zero.

As we assumed that $d \gg a$, it is sufficient to consider the distances $r \gg a$, where $|\phi| \ll |\phi_0|$, and where the angular range with an absence of plasma particles is relatively narrow and is determined by the inequalities:

$$1 - \cos\theta > \frac{a^2}{2r^2}\left(1 - \frac{2e|\phi_0|}{m_e v^2}\right) \tag{3.21}$$

for electrons, and

$$1 - \cos\theta > \frac{a^2}{2r^2}\left(1 + \frac{2Z_i e|\phi_0|}{m_i v^2}\right) \tag{3.22}$$

for ions.

In the calculation of the spatial distribution of plasma particles close to the dust particle, we should take into account that in the ranges determined by Eqns (3.21), (3.22) the plasma particles are absent. As we are interested in large distances, we can assume that $|e\phi| \ll T_e, T_i$. Here, the electron and ion distributions, close to the dust particle, can be found from relations:

$$n_e = n_{e,0}\left(1 + \frac{e\phi}{T_e}\right), \tag{3.23}$$

$$n_i = n_{i,0}\left(1 - \frac{Z_i e\phi}{T_i}\right) - n_{i,0}\frac{a^2}{r^2\sqrt{\pi}}\int_0^\infty \exp(-y^2) \times \left(y^2 + \frac{eZ_i|\phi_0|}{T_i}\right)\mathrm{d}y = n_{i,0}\left(1 - \frac{e\phi}{T_i}\right) - n_{i,0}\frac{a^2}{4r^2} \times \left(1 + \frac{2eZ_i|\phi_0|}{T_i}\right). \tag{3.24}$$

The first terms in these expressions give the usual Debye screening. We will consider the distances $r \gg d \gg a$, where the condition of quasi-neutrality should be fulfilled, $n_e = \sum_i Z_i n_i$, giving an expression for the potential of a single dust particle at distances much larger than the Debye radius,

$$\phi = -|\phi_0|\sum_i \frac{T_e}{2(T_e + T_i)}\left(Z_i + \frac{T_i}{2e|\phi_0|}\right)\frac{a^2}{r^2}\,. \tag{3.25}$$

For $T_i \ll T_e$ and $|\phi_0| = Z_d e/a$, we find the potential describing the repulsion of dust particles for distances larger than the Debye radius (denoted as ϕ_r) [52] (see Refs [53, 54]) to be

$$\phi_r = -\sum_i \frac{Z_d Z_i e a}{2r^2}\,. \tag{3.26}$$

This potential is not screened. The screened Coulomb potential under these conditions is described by:

$$\phi = -\frac{Z_d e}{r}\exp\left(-\frac{r}{d}\right). \tag{3.27}$$

Thus, the non-screened potential (3.26) dominates the screened Coulomb potential for distances

$$r \gg d\ln\frac{d}{a}\,. \tag{3.28}$$

Potential (3.26) leads to repulsion forces of dust particles $\mathbf{F}_r$, which slowly decrease with distance between the dust particles. These forces work effectively at distances much

larger than the Debye screening radius,

$$\mathbf{F}_{\mathrm{r}} = -\frac{\partial U_{\mathrm{r}}}{\partial \mathbf{r}}, \tag{3.29}$$

where,

$$U_{\mathrm{r}} = -Z_{\mathrm{d}} e \phi_{\mathrm{r}} = \eta_{\mathrm{r}} \frac{Z_{\mathrm{d}}^2 e^2 a}{2r^2}, \tag{3.30}$$

and the coefficient η_{r} is equal to [52]

$$\eta_r = \frac{e|\phi_0|}{T_{\mathrm{e}}} \left(\frac{aT_{\mathrm{e}}}{Z_{\mathrm{d}} e^2}\right) \frac{T_{\mathrm{e}}}{T_{\mathrm{e}} + T_{\mathrm{i}}} \left(Z_{\mathrm{i}} + \frac{T_{\mathrm{i}}}{2e|\phi_0|}\right) \approx Z_{\mathrm{i}}. \tag{3.31}$$

The last approximate expression in Eqn (3.31) is found for the limit $T_{\mathrm{e}} \gg T_{\mathrm{i}}$.

3.3 Forces of attraction between dust particles due to direct bombardment by plasma particles

Every dust particle in a plasma creates (initiates) a radial flux of plasma particles towards its center. In the case when two dust particles are close to one another, every dust particle is situated in the path of the flux toward the other dust particle [55] (see also Ref. [56]). Due to the continuity of fluxes, such fluxes exist at distances larger than the Debye radius. This creates an additional force of attraction between the dust particles, related to the direct bombardment of dust particles by fluxes associated with the other dust particles.

To be more specific, for a spherical dust particle in an isotropic distribution of plasma particles, the plasma flux does not transfer any momentum to the particle. However, as was already shown, a dust particle itself creates an anisotropy in the plasma particle distribution in its neighborhood, so within a certain angular interval, there are no plasma particles moving in a radial direction away from the dust particle. From this property it follows that when two dust particles are present in an isotropic plasma close to each other, a force will act on each of the dust particles due to bombardment from the flux associated with the other dust particle, from the side, opposite to the direction to the other dust particle.

To find this force we can invert the problem and calculate the bombardment force assuming that the flux exists only from the other dust particle, in the same angular interval in which it is absent. The bombardment force, calculated in this way, will be equal in value and opposite in sign to the force we are interested in.

The angular interval is determined by inequality (3.22), if $r \gg a$. We will consider the force of attraction for $r \gg d$. In the opposite limit, the attraction force is small as compared to the Coulomb force. For this reason, we can certainly use expression (3.22), as $d \gg a$.

Each dust particle is under the action of the flux of the other dust particle in its angular interval (3.22). Since $r \gg a$, this flux, at the position of the other dust particle, is almost flat. The ions in this flux are transferring a larger amount of momentum than the electrons (see below).

The cross-section of interaction is determined by relation (3.4) and the ion flux is determined by the velocity v_{i} far from the dust particle on which the flux is acting. The transferred momentum is determined by the ion velocity on the surface of the dust particle, which according to the conservation laws given above, is larger than v_{i} by the factor $(1 + 2Z_{\mathrm{i}} e|\phi_0|/m_{\mathrm{i}} v_{\mathrm{i}}^2)$ (remembering that, in collisions with dust particles, ions increase their momentum as they are attracted to the negatively charged particles).

The bombardment force, denoted as $\mathbf{F}_{\mathrm{b}}$, is found by integrating over the entire ion distribution in the angular range defined above. For the thermal ion distribution, we find [52]:

$$\mathbf{F}_{\mathrm{b}} = -\frac{\mathbf{r}}{r^3} 2\sqrt{\pi} a^4 T_{\mathrm{i}} n_{\mathrm{i},0} \int_{y_{\min}}^{\infty} \left(1 + \frac{Z_{\mathrm{i}} e|\phi_0|}{T_{\mathrm{i}} y^2}\right)^{5/2} \times \exp(-y^2) y^4 \, \mathrm{d}y. \tag{3.32}$$

The approximation used in the calculation of this expression assumes that the cone of angular distribution is small, which means that

$$\frac{a^2}{r^2} \left(1 + \frac{Z_{\mathrm{i}} e|\phi_0|}{T_{\mathrm{i}} y^2}\right) \ll 1, \tag{3.33}$$

which gives an estimate of the minimum value of y in expression (3.32):

$$y_{\min} = \frac{a}{r} \sqrt{\frac{Z_{\mathrm{i}} e|\phi_0|}{T_{\mathrm{i}}}}. \tag{3.34}$$

As $y_{\min}$ enters in the final result only inside a logarithm, its exact value is not very important.

The force due to electron bombardment can be obtained in a similar fashion. It differs from Eqn (3.22) by substituting $(-e)$ for $Z_{\mathrm{i}} e$, T_{e} for T_{i} and $e|\phi_0|/T_{\mathrm{e}}$ for $y_{\min}$. The last substitution is the most important for estimating the magnitude of the effect of electron bombardment. It shows that, according to the energy conservation law, only the fast electrons take part in the momentum transfer from electrons to dust particles. This leads to the appearance of a small factor, $\exp(-e|\phi_0|/T_{\mathrm{e}})$, which has the order of $v_{T\mathrm{i}}/v_{T\mathrm{e}}$. Another small factor is important only if $T_{\mathrm{e}} \gg T_{\mathrm{i}}$ (which occurs in most laboratory experiments). This factor is equal to $T_{\mathrm{i}}^2/T_{\mathrm{e}}^2$ and its appearance is due to the fact that, from the equation for equilibrium dust charge, the value $e|\phi_0|/T_{\mathrm{e}} \sim 1$, even for $T_{\mathrm{e}} \gg T_{\mathrm{i}}$. For this reason, one can usually neglect the force due to direct bombardment of dust particles by electrons.

Both the additional repulsion and attraction of dust particles at large distances have the same physical reasons, related to fluxes, which determine the rate of dissipation and the openness of the system. The expression for the attractive bombardment force is in a good agreement with 3D simulations, by means of the Particle In Cell (PIC) method [47]. It is also possible to compare the analytical results for the bombardment force obtained above with the phenomenological results of Ref. [49], where the plasma pressure acting on the dust particle from the side shadowed by a second dust particle, is briefly estimated. For this comparison, it is useful to write the obtained analytical result in the form:

$$\mathbf{F}_{\mathrm{b}} = -\frac{\partial U_{\mathrm{b}}}{\partial \mathbf{r}}, \tag{3.35}$$

where U_{b} is the effective potential which describes the bombardment force,

$$U_{\mathrm{b}} = -\eta_{\mathrm{b}} \frac{a^2}{d_{\mathrm{i}}^2} \frac{Z_{\mathrm{d}}^2 e^2}{r}; \tag{3.36}$$

$$\eta_{\mathrm{b}} = \frac{1}{2\sqrt{\pi}} \left(\frac{aT_{\mathrm{i}}}{Z_{\mathrm{d}} e^2 Z_{\mathrm{i}}}\right)^2 \int_{y_{\min}}^{\infty} \left(1 + \frac{Z_{\mathrm{i}} e|\phi_0|}{T_{\mathrm{i}} y^2}\right)^{5/2} y^4 \exp(-y^2) \, \mathrm{d}y. \tag{3.37}$$

By the phenomenological approach [56], one can calculate the ion pressure on the effective surface, from which the ions are collected: $4\pi a^2(1 + Z_i e|\phi_0|/T_i)$. We multiply this value by the solid angle at which the surface of one dust particle is 'seen' from the other dust particle:

$$\mathbf{F}_f = -\eta_f 4\pi a^2 n_{0,i} T_i \frac{a^2 \mathbf{r}}{r^3}\left(1 + \frac{Z_i|\phi_0|e}{T_i}\right)^2, \tag{3.38}$$

where η_f is the phenomenological adjustment coefficient. Expression (3.38) can be written in a form similar to (3.36), with a substitution of $\eta_{b,f}$ for η_b:

$$\eta_{b,f} = \eta_f\left(1 + \frac{Z_i|\phi_0|e}{T_i}\right)^2\left(\frac{aT_i}{Z_d e^2 Z_i}\right)^2. \tag{3.39}$$

In the limit $T_e \gg T_i$, it is necessary to take into account that $e|\phi_0|$ is of the order of T_e and for $|\phi_0| = eZ_d/a$ we find $\eta_{b,f} = \eta_f$.

From expressions (3.36) and (3.37), it is clear that the absolute value of the bombardment potential contains the small parameter a^2/d_i^2, which is comparable to the non-screened Coulomb potential, $Z_d^2 e^2/r$, but the attraction forces are not screened whereas the Coulomb forces are, such that the new forces dominate at larger distances.

It is important that expression (3.36) contains the ion Debye radius (for the normalization used here). The ion Debye radius is much lower than the electron Debye radius in all of laboratory experiments. The presence of d_i^2 in the denominator of the expressions for the attractive forces makes them rather large for the parameters of real experiments. In addition, for $T_e \gg T_i$, another large factor appears due to η_b:

$$\eta_b \approx \frac{1}{2}\sqrt{\frac{Z_i T_e}{T_i}}\sqrt{\frac{T_e}{\pi e|\phi_0|}}\ln 0.86\left(\frac{r}{a}\sqrt{\frac{T_e}{e|\phi_0|}}\sqrt{\frac{T_i}{Z_i T_e}}\right), \tag{3.40}$$

$\eta_b \gg 1$, as $e|\phi_0|/T_e \sim 1$.

The first paper to mention the possibility of attractive forces between dust particles is Ref. [57].

3.4 Attractive forces between dust particles due to Coulomb scattering of plasma fluxes

The necessity for the existence of attractive forces was pointed out in Ref. [52]. In addition to momentum transfer by direct collisions, plasma fluxes can also transfer momentum to dust particles in cases where the plasma particles do not actually strike the dust particles, but rather transfer momentum in nearly elastic Coulomb collisions, passing the dust particle at a certain distance. As for direct collisions, in an isotropic particle distribution such elastic collisions do not transfer momentum to a single dust particle.

With a method similar to the case of direct bombardment, the force of elastic Coulomb momentum transfer from one particle to another can be found by inverting the problem and calculating the momentum transferred by plasma particles emitted from another dust particle in the same angular interval (3.21). The difference between the process of momentum transfer by direct bombardment and by the Coulomb scattering is only in the value of the impact parameter, which should be, in the first case, less than the critical value, and in the second case, larger than the critical value. As for large inter-dust distances where the flux created by one dust particle at the position of the other dust particle is almost flat, it is possible to use, for the momentum transferred in elastic collisions, the known expression for ion momentum change the in Coulomb collisions with impact parameter p:

$$\frac{2m_i v}{1 + p^2 v^4 m_i^2/(Z_d^2 e^4 Z_i^2)}. \tag{3.41}$$

By multiplying this expression by the ion flux, $n_{0,i}v$, and by integrating the obtained expression over the angles in the interval (3.21), as well as by integrating the result over the impact parameters and ion velocities, supposing that the ion distribution far from the dust particles is thermal, we find the force due to the Coulomb scattering of ion fluxes, $\mathbf{F}_c$:

$$\mathbf{F}_c = -\frac{\mathbf{r}}{r}\int 2\pi p\,\mathrm{d}p\,\frac{2m_i v^2 n_{0,i}}{1 + p^2 v^4 m_i^2/(Z_d^2 e^4 Z_i^2)}\,\frac{a^2}{2r^2}\left(1 + \frac{2Z_i e|\phi_0|}{m_i v^2}\right) \times \exp\left(-\frac{v^2}{2v_{Ti}^2}\right)\frac{v^2\,\mathrm{d}v}{\sqrt{2\pi}v_{Ti}^3} \tag{3.42}$$

or

$$\mathbf{F}_c = -\frac{\partial U_c}{\partial \mathbf{r}}, \tag{3.43}$$

where U_c is the potential of this attractive force in the form of (3.36), substituting η_c for η_b,

$$\eta_c = \frac{1}{\sqrt{\pi}}\int_0^\infty\left(1 + \frac{2Z_i e|\phi_0|}{y^2 T_i}\right)\ln\Lambda\exp(-y^2)\,\mathrm{d}y, \tag{3.44}$$

where,

$$\Lambda = \frac{d^2 + Z_d^2 e^4 Z_i^2/(4T_i^2 y^4)}{a^2(1 + Z_i e|\phi_0|/T_i) + Z_d^2 e^4 Z_i^2/(4T_i^2 y^4)}. \tag{3.45}$$

By integrating over the impact parameter we have assumed that the minimum impact parameter corresponds to the critical value whereby the ions begin to pass the dust particle, and the maximum impact parameter corresponds to the Debye radius.

In the limit $T_e \gg T_i$, the value of Λ is of the order of unity only for $a \ll 4d_i T_i/T_e$. Under these conditions, the force due to Coulomb scattering of fluxes on particles is larger than the force due to direct bombardment of the dust particles, by approximately $\sqrt{T_e/T_i}$ times (as follows from the comparison of the expressions for η_b and η_c). For $a < d_i(T_i/T_e)^{3/4}$, the Coulomb scattering still dominates over direct bombardment. For T_e of the order of T_i, both forces are of the same order of magnitude.

3.5 The attraction and repulsion of dust particles due to neutral fluxes

Forces due to fluxes of neutrals on dust particles appear only if the thermal neutrals being absorbed by dust particles leave them with a thermal distribution corresponding to the dust surface temperature, different from the neutral temperature. In the case where the temperature of the dust surface is lower than the neutral temperature, the energy absorbed by the dust particle is greater than the energy lost by the dust particle, i.e., there exists an energy flux toward the dust particles [58]. Also, the neutrals appearing as a result of the recombination of electrons and ions can leave the dust particles. In this case, a net neutral flux exists.

In most of the low-temperature laboratory plasma experiments, the density of neutrals is approximately 5 orders

greater than the density of ionized particles, and the question is, under which conditions does the attraction or repulsion of dust particles due to neutral fluxes dominate over the attractive forces due to fluxes of charged particles, taking into account that the charged particle cross-sections are substantially larger than the neutral cross-sections?

By using an argument similar to that for ion fluxes, we obtain the interaction forces between dust particles due to neutral fluxes:

$$\mathbf{F}_{\mathrm{n}} = -\frac{\partial U_{\mathrm{n}}}{\partial \mathbf{r}}\,, \tag{3.46}$$

where,

$$U_{\mathrm{n}} = -n_{\mathrm{n}} T_{\mathrm{n}} \frac{1}{2r}\,\pi a^4 \left(1 - \sqrt{\frac{T_{\mathrm{ds}}}{T_{\mathrm{n}}}}\right), \tag{3.47}$$

and n_{n} is the neutral density, T_{n} is the temperature of neutrals and T_{ds} is the temperature of the surface of the dust particles. The attraction appears for $T_{\mathrm{ds}} < T_{\mathrm{n}}$. Expression (3.47) can be rewritten in a form more useful for comparison with the other forces:

$$U_{\mathrm{n}} = -\eta_{\mathrm{n}} \frac{a^2}{d_{\mathrm{i}}^2} \frac{Z_{\mathrm{d}}^2 e^2}{r}\,, \tag{3.48}$$

where

$$\eta_{\mathrm{n}} = \frac{1}{8z^2} \frac{T_{\mathrm{n}} T_{\mathrm{i}}}{T_{\mathrm{e}}^2} \frac{n_{\mathrm{n}}}{n_{\mathrm{i}}} \left(1 - \sqrt{\frac{T_{\mathrm{ds}}}{T_{\mathrm{n}}}}\right). \tag{3.49}$$

From this expression, it follows that the coefficient of attraction due to neutrals, η_{n}, contains, for T_{n} of the order of T_{i}, the temperature factor $(T_{\mathrm{i}}/T_{\mathrm{e}})^2$, while for dust particles which are not very small (see below), the coefficients η_{b} η_{c} contain a factor $T_{\mathrm{e}}/T_{\mathrm{i}}$. All of these factors compete with the large ratio $n_{\mathrm{n}}/n_{\mathrm{i}}$ in expression (3.49).

In laboratory experiments on plasma dust-crystals and plasma etching, $T_{\mathrm{i}}/T_{\mathrm{e}} \approx 10^{-2}$ and the degree of ionization is not less than $10^{-6} - 10^{-7}$. Therefore, the temperature factors overcome the effect related to the low degree of ionization. Due to the additional small factor $1/8z^2 \ll 1$, the forces related to the neutral fluxes can be neglected in laboratory experiments, independently of its sign. However, the 'safety' factor for this statement is only one order of magnitude. If the degree of ionization in a laboratory experiment is inhomogeneous such that regions with a low degree of ionization can exist locally, then the effect of neutrals can be important in these regions.

In planetary rings, the degree of ionization is high but the temperature of all components appears to be equal such that the neutrals do not contribute to the interaction. For interstellar clouds, the rate of equalization of temperatures is high, but the surface temperatures of dust particles appear to be lower than the temperature of neutrals, as the dust particles are cooled by radiation.

In molecular clouds, the temperature of neutrals is accepted to be of the order of 10 K, but the surface temperature of dust particles cannot be less than the temperature of three degree black body radiation such that the difference between the temperature of the neutrals and the surface temperatures of dust cannot be substantially larger than several degrees. Nevertheless, the important point is that the interaction with neutrals leads to an attraction between the dust particles in dust-molecular clouds. As the temperatures of ions and electrons are, here, almost equal, and the degree of ionization is of the order of 10^{-7}, the attraction due to neutral bombardment is dominant. In this case, the attraction is also related to the openness of the system as the difference of temperatures between dust surfaces and neutrals is produced by radiative cooling of the dust, the energy leaving the system.

3.6 Dust molecules

Numerical simulation [55] indicates that it is quite possible to form molecules from two negatively charged dust particles in a dusty plasma, for $T_{\mathrm{e}} = T_{\mathrm{i}}$. The analytic consideration given above is sufficient to find the dependence of the binding energy as a function of $T_{\mathrm{e}}/T_{\mathrm{i}}$, and to show that the binding energy increases with the growth of this ratio.

Most plasma-dust experiments have electron temperatures of several eV and $T_{\mathrm{e}}/T_{\mathrm{i}} \approx 10^2$. These parameters seem to be very favorable for the formation of dust molecules and more complex structures. The dust molecule can be considered as an elementary building block for the formation of a plasma-dust crystal.

The above analytical expressions for the attractive and repulsive forces allow us to give an estimate for the binding energy of dust molecules under conditions corresponding to those of existing laboratory experiments. In Figure 3, coefficients $\eta_{\mathrm{r}}, \eta_{\mathrm{b}}$, and η_{c} are given as functions of the temperature ratio $T_{\mathrm{i}}/T_{\mathrm{e}}$, in the range of $10^{-2} < T_{\mathrm{i}}/T_{\mathrm{e}} < 10^{-1}$, which corresponds to the range in most experiments. We assume that the temperature of the dust surface is equal to the neutral temperature and that the interaction with neutrals does not lead to additional attractive forces [52].

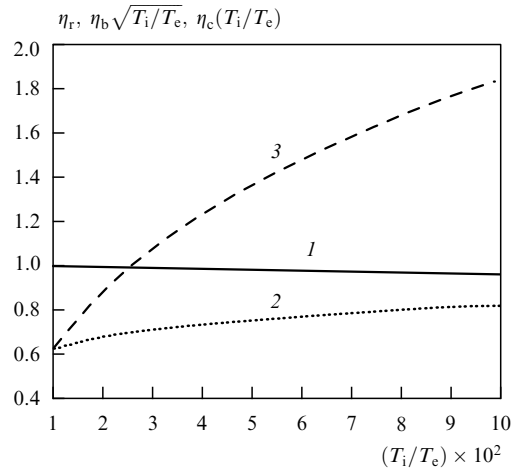

Figure 3. The dependence of the coefficients η_{r}, η_{b}, and η_{c}, on the temperature ratio $T_{\mathrm{i}}/T_{\mathrm{e}}$, in the range $10^{-2} < T_{\mathrm{i}}/T_{\mathrm{e}} < 10^{-1}$: *1* corresponds to η_{r}, *2* corresponds to η_{b}, and *3* corresponds to η_{c}.

The radius of the dust molecule, r_{m}, can be estimated from the distance at which the total potential $U = U_{\mathrm{r}} + U_{\mathrm{b}} + U_{\mathrm{c}}$ has a minimum:

$$r_{\mathrm{m}} = \frac{\eta_{\mathrm{r}}}{(\eta_{\mathrm{b}} + \eta_{\mathrm{c}})} \frac{d_{\mathrm{i}}^2}{a} \approx \frac{d_{\mathrm{i}}^2}{a} \sqrt{\frac{T_{\mathrm{i}}}{T_{\mathrm{e}}}}. \tag{3.50}$$

The last approximate expression is written for $T_{\mathrm{e}} \gg T_{\mathrm{i}}$.

Figure 4 displays the dependence of r_m on the temperature ratio in the same range: $10^{-2} < T_i/T_e < 10^{-1}$.

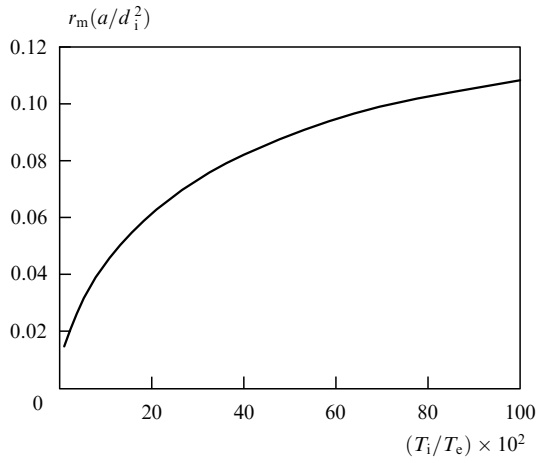

Figure 4. The dependence of the radius of the dust molecule, r_m, on the temperature ratio, T_i/T_e, in the range $10^{-2} < T_i/T_e < 10^{-1}$.

The binding energy of the dust molecule, U_m, can be estimated as the value of U for $r = r_m$:

$$U_m = \frac{Z_d^2 e^2 a}{2r_m^2} = \frac{Z_d^2 e^2}{2a}\frac{a^4}{d_i^4}\frac{(\eta_b + \eta_c)^2}{\eta_r} \approx \frac{T_e^2 Z_d}{T_i}\frac{a^4}{d_i^4}. \qquad (3.51)$$

The last approximate expression is written for $T_e \gg T_i$.

Figure 5 contains the dependence of U_m on the temperature ratio, in the range $10^{-2} < T_i/T_e < 10^{-1}$.

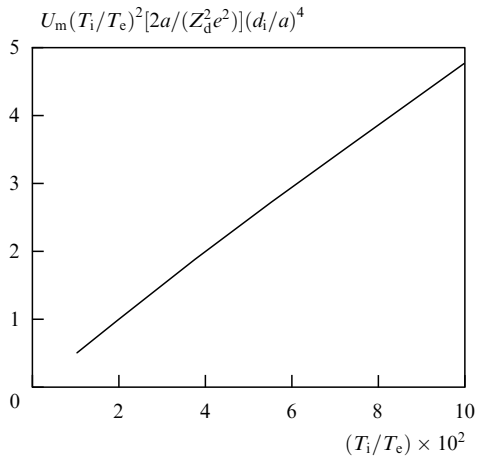

Figure 5. The dependence of the binding energy of the dust molecule, U_m, on the temperature ratio, T_i/T_e, in the range $10^{-2} < T_i/T_e < 10^{-1}$.

For typical plasma experiments, $T_e \approx 2$ eV, $a/d_i \approx 1/10$, $Z_d \approx 10^4$ and the binding energy can reach 100 eV and larger. The binding energy is strongly dependent on the ratio a/d_i — to its fourth power. In most experiments, however, this ratio is not less than 1/10 and, therefore, the factor a^4/d_i^4 is larger than 10^{-4}.

The obtained estimate for the binding energy indicates that it is rather large. It is likely that the binding energy in the dust-crystal should be of the same order of magnitude, in the case when binary interactions do play the most important role in a dust-crystal. This is partially supported by experimental observations of dust-crystal melting, where the observed energy of dust particles measured after the melting is close to 40 eV, while the initial temperature of dust particles, before the formation of dust structures, is close to 0.02 eV (room temperature).

Generally speaking, the energy $Z_d T_e$, which is of the order of tens or hundreds of keV, is the typical maximum energy for two dust particles at close distance, as $Z_d e^2$ is of the order of aT_e and the energy of interaction, at a distance of the order of a (close distance), is of the order of $Z_d^2 e^2/a \approx Z_d T_e$. The molecule is formed at distances of the order $d_i^2/a \gg a$ and the binding energy is 4 orders of magnitude less than $Z_d T_e$, which gives an energy of the order of 1 eV. Expression (51), however, contains an additional factor $T_e/T_i \approx 10^2$, the origin of which is also rather clear and is related to the fact that the ions are collected from a surface much larger than the geometrical size of the dust particle as they are attracted to it. This explains the large estimate for the molecular binding energy, and probably the crystal binding energy, of the order of 100 eV, which is in qualitative agreement with experimental observations.

3.7 Dust sound waves and ordinary sound waves

The attractive forces in dusty plasmas are similar to gravitational forces — they have the same dependency on distances between particles. The differences are:

(1) The attraction becomes dominant only for certain large distances, of the order of the size of a dust molecule, d^2/a (the latter expression, for the absence of neutral fluxes). This does not mean that the attraction does not work at smaller distances. In general, all forces should be taken into account and the repulsion forces can lead to elastically created sound waves;

(2) The attractive forces only act on the dust component. There should exist a large collision rate of dust particles with other particles, including neutrals, for the other particle to follow the contraction produced by dust attraction.

Dust attraction becomes less effective in the case when certain collisions, or other processes, can fill the angular cone of the plasma particle, or there are neutral distributions close to dust particles, even though flux conservation does not allow fluxes to change substantially, neither by collisions or instabilities.

In applications, particularly astrophysical, all types of attraction between particles, including gravitational attraction and the attraction between dust particles due to the bombardment of neutrals and charged particles, should be treated together. The gravitational instability, as is well understood, starts only when the thermal motions leading to sound waves do not prevent its development. The classical equation for the Jeans gravitational instability, in the case where a system contains dust, neutrals and plasma particles, has the form:

$$\omega^2 = k^2 v_s^2 - 4\pi G(n_n m_n + n_i m_i + n_e m_e + n_d m_d). \qquad (3.52)$$

Included is the mass density of all dusty plasma components. In equation (3.52), $G = 6.67 \times 10^{-8}$ CGS, is the gravitational constant and v_s is the velocity of ordinary sound. As the velocity of ordinary sound is relatively large (relative to the other sound velocities which we discuss later) the critical value of the wave number $k_{cr} = 2\pi/L_{cr}$, which determines the Jeans length, L_{cr}, is relatively small, and therefore the size from

which the instability starts is large. According to accepted theory [44, 45], stars are born in regions where intense compressional shock waves propagate through interstellar dust-molecular clouds. As a rule, the dominant part of the last term in the right hand side of Eqn (3.52) is the dust component, as the term $n_d m_d$ makes the largest contribution to the mass density.

In a dust cloud it is nevertheless necessary, not only to take into account the additional forces of attraction described above, and those due to fluxes of plasma particles and neutrals onto the dust particles, but also the fact that another branch of sound waves appear in a dusty plasma which can significantly alter the threshold for instability. Where gravitational attraction is negligible, the new attraction forces may behave in ways similar to gravitational instability , which is a critical topic in laboratory experiments.

It is very important that another branch of sound waves exist in a dusty plasma, called dust-sound waves [59–62], which have a velocity, called the dust-sound velocity, that is much slower than the usual sound velocity. It is necessary to understand the way these two branches, with two different sound velocities, enter into the dispersion equation for instability.

The velocity of dust-sound waves is many orders of magnitude slower than that of ordinary sound, and, if one substitutes the dust-sound velocity into Eqn (3.52), the critical size for an instability to develop becomes much smaller than for ordinary sound. We will begin by considering a system's behavior in the case where gravitation is unimportant, and only the dust-sound waves actually enter the equations, and where dust attraction is due to the openness of the system. We will then describe how this instability is combined with the usual gravitational instability. The first approach is needed to understand the initial stages in the formation of plasma-dust crystals, plasma-dust liquid drops and plasma-dust clouds in laboratory experiments; and a more general approach, including gravitational forces, is needed for astrophysical applications.

The expressions for dust-sound waves are different in the short and long wavelength limits. The division between them is the mean free path of plasma particle–dust collisions (a more exact definition is provided below).

Collisionless dust sound waves, remembering that normal sound waves can also be collisionless, ($\omega \gg \nu_i$), are called ion-sound waves. They only exist for $T_e \gg T_i$, and their speed is

$$v_s = \sqrt{\frac{Z_i T_e (1+P)}{m_i}}. \tag{3.53}$$

Normal collisional sound waves, ($\omega \ll \nu_i$), exist for any relation between T_e and T_i, and their speed is $\sqrt{(5T_i + 3T_e)/3m_i}$.

The full spectrum of ion-sound waves can be found by supposing that the electron susceptibility corresponds to the Debye screening ($\epsilon^e - 1 \approx \omega_{pe}^2/k^2 v_{Te}^2$, i.e., electrons quasistatically following the ion disturbances) and that the ion susceptibility corresponds to free inertial ion motion ($\epsilon^i - 1 \approx -\omega_{pi}^2/\omega^2$). The contribution of dust susceptibility is negligible if the dust-plasma frequency, ω_{pd}, is much less than the ion plasma frequency. In this case $v_s = v_{Te}\omega_{pi}/\omega_{pe}$ and the condition for quasineutrality in the unperturbed state is $n_{i,0} = n_{e,0}(1+P)$, which gives, in Eqn (3.53), the dependence of the usual sound velocity on the dust density P. It is only the presence of this dependence that makes the velocity of ordinary sound in dusty plasma different from the velocity of ordinary sound in the absence of dust.

For collisionless dust-sound waves both the electron and ion susceptibilities correspond to Debye screening and the susceptibility of the dust corresponds to the free inertial motion of the dust particles in the wave field:

$$\epsilon^d_{\omega,k} = 1 - \frac{\omega_{pd}^2}{\omega^2}, \qquad \omega_{pd}^2 = 4\pi \frac{Z_d^2 e^2 n_d}{m_d}. \tag{3.54}$$

Then the condition of quasineutrality in the wave disturbances, and the condition of quasineutrality of the unperturbed state, lead to

$$\omega^2 = k^2 v_{ds,1}^2, \tag{3.55}$$

where $v_{sd,1}$ is the velocity of short wavelength dust sound waves, equal to [60, 61]

$$v_{ds,1}^2 = \omega_{pd}^2 \frac{d_e^2 d_i^2}{d_e^2 + d_i^2} = \sqrt{\frac{P Z_d T_e}{m_d} \frac{\tau}{\tau + 1 + P}}. \tag{3.56}$$

We give the subscript 1 for this dust sound speed to distinguish it from the long wavelength dust-sound speed, which will be described below.

For $\tau = T_i/T_e \ll 1$, the velocity of the dust-sound wave considered here is determined by the relation

$$v_{sd} = \sqrt{\frac{P Z_d T_i}{m_d (1+P)}}. \tag{3.57}$$

The derivation of Eqn (3.57) assumes that $v_{sd} \gg v_{Td} = \sqrt{T_d/m_d}$, or

$$T_d \ll P Z_d T_i \frac{1}{1+P}. \tag{3.58}$$

As in the most interesting cases Z_d is a very large number, condition (3.58) is easily satisfied, even for $T_d = T_i$. For low dust density, P, however, relation (3.58) can be violated. It is satisfied in all experiments on plasma-dust crystals and plasma etching; it is satisfied in planetary rings; and, in the limit of applicability, is likely to be satisfied in interstellar dust-molecular clouds. From optimal estimates in dust-molecular clouds, $Z_d \sim 10^2$, $P \sim 10^{-2} - 10^{-1}$, and relation (3.58) is satisfied. In the latter case, a more appropriate comparison of v_{Td} is not with $v_{sd,1}$ but with the long wavelength dust-sound velocity, $v_{sd,2}$, given below. The latter is not proportional to P, although the critical wave number (the second dust-sound wave numbers should be less than the critical one) is proportional to P. There are several important comments to be made concerning the dependence of the dust-sound speed on the adopted parameters. The presence of parameter P in the velocity of dust-sound waves distinguishes their properties from ordinary dust waves substantially, if one considers the nonlinearities and the conversion of dust-sound waves into shock waves. In ordinary sound waves, density enhancements are accompanied by temperature changes, and thus, in changes in speed, faster regions overtake slower regions, converting sound waves into shock waves. In dust-sound waves, not only the temperature, but also the dust density is changing, and the dust-sound speed depends directly on dust density. This opens the possibility for the existence of new, nonlinear dust waves as well as new types of shock waves. In this problem, it is important that the

possibility of energy and momentum transfer from dust particle disturbances to neutral and charged particle components of dusty plasmas exists.

Long wavelength dust-sound waves exist for wavelengths larger than the mean free path of plasma particles and their collisions with dust particles (we will continue to neglect the influence of the neutral component, which will be discussed later [59]). To describe the interactions between plasma and dust particles we return to cross-sections (3.3) and (3.4), which are concerned only with direct impact collisions between plasma particles and dust particles. We will add to these cross-sections the elastic Coulomb collision cross-section for plasma particles with dust particles, which was shown above to be of the same order of magnitude as those given by direct bombardment. The frequencies which govern the disappearance (recombination) of plasma particles in collisions with dust particles are given by cross-sections (3.3) (3.4). The equation describing the dynamic changes in a dust particle's charge, Eqn (3.7), can be used to find the charging frequency denoted as $\nu_{\rm ch}$. It characterizes the time scale of relaxation of dust charge to equilibrium, for small deviations in charge from the equilibrium value. If $Z_{\rm d} = Z_{\rm d}^{\rm eq} + \delta Z_{\rm d}$; $\delta Z_{\rm d}/Z_{\rm d}^{\rm eq} \ll 1$, then

$$\frac{{\rm d}\delta Z_{\rm d}}{{\rm d}t} = \frac{\partial(\psi_{\rm e} - \sum_{\rm i} Z_{\rm i}\psi_{\rm i})}{\partial Z_{\rm d}}\,\delta Z_{\rm d} = -\nu_{\rm ch}\delta Z_{\rm d}. \tag{3.59}$$

By using Eqn (3.59) in conjunction with the equation for equilibrium charge, (3.8), we find:

$$\nu_{\rm ch} = \frac{\omega_{\rm pi} a}{\sqrt{2\pi} d_{\rm i}}\,(1 + \tau + z). \tag{3.60}$$

In the case when the values, τ and z, are of the order of unity, the following estimate for the charging frequency can be written, $\nu_{\rm ch} \approx \nu_{\rm i} Z_{\rm d}$, where $\nu_{\rm i}$ is the frequency for ion-ion collisions. As ordinarily, $Z_{\rm d} \gg 1$, the charging frequency is much larger than the frequency of ion-ion collisions. The frequency which gives the rate of electron and ion recombination on dust particles is determined by the same cross-sections, Eqns (3.3) and (3.4), and should be proportional to the dust density. The only dimensionless parameter which is linearly dependent on dust density is P, and such a frequency is estimated to be $\nu_{\rm ch} P \approx \nu_{\rm i} Z_{\rm d} P$. The exact calculations supports these estimates. Given here are the results. The exact relation between the frequency, Eqn (3.60), and $\nu_{\rm i}$, has the form:

$$\nu_{\rm ch} = \nu_{\rm i} Z_{\rm d}\,\frac{3\tau(1 + \tau + z)}{2z \ln \Lambda}\,. \tag{3.61}$$

For laboratory experiments on plasma-dust crystals and plasma etching, $\tau \sim 10^{-2}$, but $Z_{\rm d} \sim 10^4 - 10^5$ and $\nu_{\rm ch}$ exceeds $\nu_{\rm i}$ by approximately two orders of magnitude. In planetary rings, this excess is larger, by four orders of magnitude. In interstellar dust-molecular clouds, the excess is one or two orders of magnitude. It is important that, in all cases, the excess is substantial — by several orders of magnitude. From the same cross-sections, Eqns (3.3) and (3.4), we find, for the disturbances in the continuity equations for electrons and ions,

$$(-{\rm i}\omega + \bar{\nu}_{\rm e,i})\,\frac{\delta n_{\rm e,i}}{n_{\rm e,i}} + {\rm i}(\mathbf{k}\cdot\mathbf{u}_{\rm e,i}) = -\bar{\nu}_{\rm e,i}\,\frac{\delta n_{\rm d}}{n_{\rm d}} - \delta\bar{\nu}_{\rm e,i}\,, \tag{3.62}$$

where $\bar{\nu}$ is the effective frequency of the disappearance (recombination) of electrons and ions on dust particles, and $\mathbf{u}_{\rm e,i}$ are the directed velocities of electrons and ions. Equation (3.62) can be derived by integrating the kinetic equations for electrons and ions, with cross-sections (3.3) and (3.4), over a Maxwellian distribution, shifted in velocities by the drift velocity $\mathbf{u}_{\rm e,i}$, small compared with the thermal velocity. In the first term on the right-hand side of Eqn (3.62) one can substitute the equilibrium value of the dust charge, while in the second term of the right-hand side it is necessary to take into account the first term of the expansion, $\delta Z_{\rm d}/Z_{\rm d}$, as the variation in density depends on the variations of charge. We find

$$\bar{\nu}_{\rm e} = \nu_{\rm ch}\,\frac{P}{z}\,\frac{(\tau + z)}{(1 + \tau + z)}, \qquad \bar{\nu}_{\rm i} = \frac{\bar{\nu}_{\rm e}}{1 + P}\,. \tag{3.63}$$

These relations confirm the estimate given above, that the frequency of plasma particle recombination on dust particles differs from the charging frequency by, approximately, the factor P; but the exact expression contains a factor of the order of unity, depending upon the temperature ratio and on the value of the equilibrium charge. Finally, we also obtain the dependence of the last term in the continuity equation for electrons and ions, on $\delta Z_{\rm d}/Z_{\rm d}$:

$$\delta\bar{\nu}_{\rm e} = -z\,\frac{\delta Z_{\rm d}}{Z_{\rm d}}\,\bar{\nu}_{\rm e}, \qquad \delta\bar{\nu}_{\rm i} = \frac{z}{\tau + z}\,\bar{\nu}_{\rm i}\,\frac{\delta Z_{\rm d}}{Z_{\rm d}}\,. \tag{3.64}$$

The relationship between $\bar{\nu}_{\rm i}$ and $\bar{\nu}_{\rm e}$ has a very simple meaning, that the equilibrium fluxes of electrons and ions are equal. This relation can be also written in the form

$$n_{\rm e,0}\,\bar{\nu}_{\rm e} = n_{\rm i,0}\,\bar{\nu}_{\rm i}. \tag{3.65}$$

In a similar manner one can obtain the equations for a perturbation, in momentum, of electrons and ions:

$$(-{\rm i}\omega + \tilde{\nu}_{\rm e,i})\,\mathbf{u}_{\rm e,i} = -v_{T{\rm e,i}}^2\,{\rm i}\mathbf{k}\,\frac{\delta n_{\rm e,i}}{n_{\rm e,i}} + \frac{e_{\rm e,i}}{m_{\rm e,i}}\,\frac{\mathbf{k}}{k}\,E, \tag{3.66}$$

where

$$\tilde{\nu}_{\rm e} = \nu_{\rm ch}\,\frac{P(\tau + z)}{z(1 + \tau + z)}\left(4 + z + \frac{2z^2}{3}\exp z \ln\frac{d}{a}\right), \tag{3.67}$$

$$\tilde{\nu}_{\rm i} = \nu_{\rm ch}\,\frac{P}{(1 + P)z(1 + \tau + z)}\left(z + \frac{4}{3}\,\tau + \frac{2z^2}{3\tau}\,\ln\frac{d}{a}\right). \tag{3.68}$$

These equations, apart from the direct bombardment cross-section (appearing in the continuity equation), also contain the effect of Coulomb elastic collisions between plasma particles and dust particles. These are the terms which contain the Coulomb logarithm, which is, here, $\ln(d/a)$. They were obtained by using the Landau collision integral in the kinetic equation. For τ and z of the order of unity, the contribution due to Coulomb collisions with ions is of the same order of magnitude as the contribution due to direct bombardment, i.e. $\tilde{\nu}_{\rm i} \sim \bar{\nu}_{\rm e}$, $\bar{\nu}_{\rm i}$. The fact that the rate of these collisions is of the same order can be obtained from very simple estimates:

$$r_{\rm eff} \approx \frac{Z_{\rm d}^2 e^2}{T}, \qquad \sigma_{\rm cul} \approx \pi r_{\rm eff}^2 \approx \frac{\pi Z_{\rm d}^2 e^4}{T^2} \approx \pi a^2 z^2\,,$$

for $z \sim 1$. The factor $\exp(-z)$, in electron collisions, equalizes the electron and ion collision rates in the continuity equations, but in the equations for momentum transfer such

equalization is not present, and, therefore, $\tilde{\nu}_e$ contains $\exp z \approx v_{Te}/v_{Ti} \gg 1$, such that, in $\tilde{\nu}_e$, the Coulomb collision term is dominant. In most laboratory experiments, where $\tau \approx 10^{-2}$, Coulomb collisions also dominate $\tilde{\nu}_i$. This is due to the usual dependence ($\propto 1/T_i^{3/2}$). Additionally, $1/T_i^{1/2}$ appears from ν_{ch}).

The equations obtained for density and momentum perturbations can be used to obtain a dispersion equation which takes into account the plasma particle collisions but neglects the binary plasma particle collisions. These equation do not always give sound-like solutions, as there exists a transition range from one type of dust-sound wave to another, but in extreme limits, we find the two types of dust-sound waves. The existence of a transition region is physically clear — it corresponds to the case where the wavelength is of the order of the mean free path of plasma particles in collisions with dust. The question is, 'what kind of combinations of four collision frequencies and in which form they enter into the definition of the mean free paths?'

For each type of particles there are only two types of collisions, $\tilde{\nu}_{e,i}$ and $\bar{\nu}_{e,i}$, but their values are different, as was shown above. The answer to this question can be obtained from the dispersion relation — it is that the value of the mean free path is determined by an effective frequency which is a 'geometrical mean value' of the two mentioned frequencies. Namely, for electrons, it is $\nu_e^{\text{eff}} = \sqrt{\tilde{\nu}_e \bar{\nu}_e}$, and for ions, it is $\nu_i^{\text{eff}} = \sqrt{\tilde{\nu}_i \bar{\nu}_i}$. Therefore, it is reasonable to introduce the wave vectors measured in the inverse values of these effective mean free paths:

$$\varkappa_e = \frac{k v_{Te}}{\nu_e^{\text{eff}}}\,, \qquad \varkappa_i = \frac{k v_{Ti}}{\nu_i^{\text{eff}}}\,. \tag{3.69}$$

Then the continuity equations and the equations for change in momentum, together with the charging equation (for $\omega \ll \nu_{ch}$), give the following expression for the dielectric constant, $\epsilon_{\omega,k}$, describing the electrostatic perturbations [59]:

$$\epsilon_{\omega,k} = A(k^2) + (\epsilon^{\text{d}}_{\omega,k} - 1)\, B(k^2)\,. \tag{3.70}$$

In this expression, the dust response, $(\epsilon^{\text{d}}_{\omega,k} - 1)$, is left arbitrary, which is useful for further consideration of the effects of dust attraction. The coefficients, A and B, depend only on k^2 in the limit of low frequencies, $\omega \ll \bar{\nu}_{e,i}, \tilde{\nu}_{e,i}$, but they can be written for arbitrary relationships between the wave numbers and the mean free path:

$$\begin{aligned} A(k^2) = {} & 1 + \Omega_e^2 \big\{ k_i^2 + (\tau + z)(1 + \tau + z)^{-1} \\ & + (1 + P)(1 + \tau + z)^{-1} + P(\tau + z)(k_i^2 + 1) \\ & \times [z(1 + \tau + z)]^{-1} \big\} \big[k_e^2 (\tau + z)(1 + \tau + z)^{-1} \\ & + k_i^2 (1 + \tau + z)^{-1} + k_i^2 k_e^2 \big]^{-1} + \Omega_i^2 \Big\{ k_e^2 \\ & + (1 + \tau + z)^{-1} + (\tau + z) \big[(1 + \tau + z)(1 + P) \big]^{-1} \\ & + P(\tau + z)(k_e^2 + 1) \big[(1 + P) z (1 + \tau + z) \big]^{-1} \Big\} \\ & \times \big[k^2 (\tau + z)(1 + \tau + z)^{-1} + k_i^2 (1 + \tau + z)^{-1} + k_i^2 k_e^2 \big]^{-1}, \end{aligned} \tag{3.71}$$

$$\begin{aligned} B(k^2) = {} & 1 + \Big\{ k_e^2 (1 + P) - k_i^2 + P(\tau + z)(k_e^2 - k_i^2) \\ & \times \big[z(1 + z + \tau) \big]^{-1} \Big\} P^{-1} \big[k_e^2 (\tau + z)(1 + \tau + z)^{-1} \\ & + k_i^2 (1 + \tau + z)^{-1} + k_i^2 k_e^2 \big]^{-1}. \end{aligned} \tag{3.72}$$

In obtaining this result, we used Eqn (3.7) to express $\delta Z_d / Z_d$ through relative changes in density. The limits of applicability for the expressions of A and B are determined by the absence of the frequency coefficients, which is the consequence of the approximation used — that the frequency of the disturbance is much smaller than the effective collision frequencies of the plasma particle–dust interaction. If necessary, the frequency dependence of these coefficients can be recovered by adding to the corresponding frequencies, $\nu_{ch}, \bar{\nu}_{e,i}, \tilde{\nu}_{e,i}$, the value $(-i\omega)$. This is not of much importance for the largest frequency, $\tilde{\nu}_e$, but for other frequencies, it could be of importance in the case where the inertia of the ions needs to be taken into account, as it is for ordinary sound waves. For dust-sound waves, all of the frequency terms in the coefficients A and B are small, and can lead only to slight dust-sound damping (see below). Another important assumption in the derivation of the dispersion relation is the rejection of binary plasma particle collisions. From the estimates given above, it is easy to find that this restriction implies that

$$Z_d P \gg 1 \tag{3.73}$$

but this is, roughly speaking, the condition that the dust-sound speed exceeds the thermal ion velocity, or, more exactly, the thermal dust velocity for the ion temperature which coincides with the thermal dust velocity, when the temperature of dust is of the order of ion temperature.

For the case we used in Eqn (3.70), $(\epsilon^{\text{d}}_{\omega,k} - 1) \approx -\omega_{\text{pd}}^2/\omega^2$, i.e., if we take into account only the dust inertia, we find that the previous expressions, (3.55) and (3.56), satisfy the equation for the dielectric constant equal to zero, only for $\varkappa_{e,i} \gg 1$; that is, for wavelengths much less than the effective mean path for collisions of plasma particles with dust particles. The whole dispersion relation describes a continuous transition to and from opposing relations, and is valid in all intermediate values of wave numbers, where the wavelength is less than the mean free path for ions, but larger than the mean free path for electrons. We will give here the results for dust-sound velocity, in the case of the smallest wave numbers, where the wavelength is larger than both the mean free path for ions and electrons:

$$v_{\text{sd},2}^2 = \frac{Z_d T_e}{m_d} \frac{P(\tau + z) + (1 + P)(1 + \tau + z)}{\tau + z + 1 + P}\,. \tag{3.74}$$

The difference between expressions (3.74) and (3.56) is especially large for $\tau \ll 1$, as in Eqn (3.74), the dust-sound speed is determined by the electron, not the ion, temperature. Also, for P tending to zero, the sound speed of Eqn (3.74) does not tend to zero as it does for Eqn (3.56). It also should be mentioned that the effective collision frequency is proportional to P, and thus Eqn (3.74) is valid for wave numbers less than the critical one proportional to P.

Similar to the case where ordinary sound can be unstable in gravitational disturbances, dust-sound can be unstable in the attraction of dust particles described above. An essential difference is that the dust-sound velocity is rather small and the instability of self-contraction can be initiated at sizes much smaller than those for gravitational disturbances. We will discuss both the cases where gravitational effects are unimportant (which has applications to laboratory experiments) and the cases where they are important (which may have astrophysical applications).

3.8 Electrostatic self-contraction instability of dust clouds. A simplified approach

We are interested here in the attraction and repulsion effects under the assumption that the pair interaction of dust particles is dominant, and over large distances, or small k, where $k \ll 1/d$, i.e., we are interested in the range of wave numbers where, in the absence of new attraction and repulsion interactions, the dust-sound wave mode is present. The range over which the dust-sound mode is present is thus restricted by the lower valued wave numbers, where the dust-sound mode is converted to the self-contraction instability. We will determine the critical value of the wave number for which such a transition occurs. Assuming that the inequality $k \ll 1/d$ is fulfilled, and taking into account the non-Debye screening, leads to dust repulsion competing with the effects of dust attraction. The perturbation of dust motion can be found from the equation for dust momentum, in which the forces are taken into account. We have:

$$-\mathrm{i}\omega m_{\mathrm{d}}(\mathbf{k}\cdot\delta\mathbf{v}_{\mathrm{d},k}) = (\mathbf{k}\cdot\mathbf{F}_k) - Z_{\mathrm{d}}e(\mathbf{k}\cdot\mathbf{E}_k) = -\mathrm{i}\pi^2\eta_{\mathrm{r}}Z_{\mathrm{d}}^2e^2\delta n_{\mathrm{d},k}ka + 4\pi\,\mathrm{i}(\eta_{\mathrm{b}}+\eta_{\mathrm{c}}) \times Z_{\mathrm{d}}^2e^2\,\frac{a^2}{d_{\mathrm{i}}^2}\,\delta n_{\mathrm{d},k} - Z_{\mathrm{d}}e(\mathbf{k}\cdot\mathbf{E}_k)\,, \quad (3.75)$$

where $\delta\mathbf{v}_{\mathrm{d},k}$ is the Fourier component of the perturbation in the dust velocity, and $\delta n_{\mathrm{d},k}$ is the Fourier component of the perturbation in dust density. By using the equation of continuity, $(\mathbf{k}\cdot\delta\mathbf{v}_{\mathrm{d},k}) = \omega\delta n_{\mathrm{d},k}/n_{\mathrm{d}}$, we find the dust response, in the form:

$$\epsilon^{\mathrm{d}}_{\omega,k} = 1 - \frac{\omega_{\mathrm{pd}}^2}{\omega^2 - (\pi/4)\eta_{\mathrm{r}}\omega_{\mathrm{pd}}^2ka + (\eta_{\mathrm{b}}+\eta_{\mathrm{c}})\omega_{\mathrm{pd}}^2a^2/d_{\mathrm{i}}^2}\,. \quad (3.76)$$

To start with the simplest case, we consider the range where, in the absence of attraction and repulsion between dust particles, the dust-sound mode corresponds to the long wavelength dust-sound mode, with dust-sound velocity equal to $v_{\mathrm{sd},2}$. After taking into account the attraction and repulsion, we obtain an equation similar to that of gravitational instability:

$$\omega^2 = k^2v_{\mathrm{sd},2}^2 + \frac{\pi}{4}\,\eta_{\mathrm{r}}\omega_{\mathrm{pd}}^2ka - (\eta_{\mathrm{b}}+\eta_{\mathrm{c}})\omega_{\mathrm{pd}}^2\,\frac{a^2}{d_{\mathrm{i}}^2}\,. \quad (3.77)$$

It is possible to write the dispersion relation for an arbitrary relationship between the wavelength and the mean free path for plasma particle – dust interactions (see next section). Here, we give qualitative analyses of Eqn (3.77) written in a different form [63],

$$\omega^2 = k^2v_{\mathrm{sd},2}^2 + 2\eta_{\mathrm{r}}\eta_{\mathrm{se}}\omega_{\mathrm{pd}}kv_{\mathrm{sd},2}\,\frac{a}{d_{\mathrm{i}}} - (\eta_{\mathrm{b}}+\eta_{\mathrm{c}})\omega_{\mathrm{pd}}^2\,\frac{a^2}{d_{\mathrm{i}}^2}\,, \quad (3.78)$$

where,

$$\eta_{\mathrm{se}} = \frac{\pi}{8}\sqrt{\frac{\tau P}{1+P}\,\frac{\tau+z+1+P}{P(\tau+z)+(1+P)(1+\tau+P)}}\,. \quad (3.79)$$

By putting in Eqn (3.78), $\omega = 0$, we can find the critical value of the wave number k_{cr}, which determines the size of disturbances, $L_{\mathrm{cr}} = 2\pi/k_{\mathrm{cr}}$, which become unstable for $L > L_{\mathrm{cr}}$. This length is similar to the Jeans length for gravitational instability:

$$k_{\mathrm{cr}} = \frac{\omega_{\mathrm{pd}}}{v_{\mathrm{sd},2}}\,\frac{a}{d_{\mathrm{i}}}\left(\sqrt{\eta_{\mathrm{r}}^2\eta_{\mathrm{se}}^2+\eta_{\mathrm{b}}+\eta_{\mathrm{c}}} - \eta_{\mathrm{r}}\eta_{\mathrm{se}}\right). \quad (3.80)$$

This value of the critical wave number can be written in another form, if we use the expression for the long wavelength dust sound speed:

$$k_{\mathrm{cr}} = \frac{1}{d_{\mathrm{i}}}\,\frac{a}{d_{\mathrm{i}}}\Lambda_{\mathrm{cr}}\,, \quad (3.81)$$

where

$$\Lambda_{\mathrm{cr}} = \sqrt{\frac{P\tau(1+z+P+\tau)}{(1+P)[P(\tau+z)+(1+P)(1+\tau+z)]}} \times\left(\sqrt{\eta_{\mathrm{r}}^2\eta_{\mathrm{se}}^2+\eta_{\mathrm{b}}+\eta_{\mathrm{c}}} - \eta_{\mathrm{r}}\eta_{\mathrm{se}}\right). \quad (3.82)$$

For this expression to be valid, it is necessary that the wavelength corresponding to the critical wave number, be larger than the mean free path:

$$k \ll \frac{1}{d_{\mathrm{i}}}\,\frac{a}{d_{\mathrm{i}}}\Lambda_{\mathrm{se}}\,, \quad (3.83)$$

where

$$\Lambda_{\mathrm{se}} = \frac{P(\tau+z)}{\sqrt{2\pi(1+P)}z}\sqrt{\tau(4+z) + \frac{2z^2\tau^{3/2}\sqrt{\mu}}{3(\tau+z)(1+P)}\ln\frac{d}{a}}, \quad (3.84)$$

and $\mu = m_{\mathrm{i}}/m_{\mathrm{e}}$; i.e., the k_{cr} defines the threshold of instability only for

$$G_{\mathrm{se}} = \frac{\Lambda_{\mathrm{cr}}}{\Lambda_{\mathrm{se}}} < 1\,. \quad (3.85)$$

In the opposite case, the entire long wavelength dust-sound branch is unstable, and the threshold can be found only from the general dispersion relation, given above. For $P = 0.1$; 0.01, the critical wave number is indeed larger than the minimum wave number, where long wavelength dust-sound exists, and the instability develops for the whole branch; i.e., the dust sound wave as a branch with large real frequency, does not exist. In laboratory experiments, the critical wavelength is less than the size of the installation (or chamber) and the process of self-contraction of dust clouds should be effective.

For $k \gg k_{\mathrm{cr}}$, the growth rate reaches its maximum, similar to the usual gravitational instability, and has an explicit expression [63]:

$$\gamma_{\max} \equiv \mathrm{Im}\,\omega_{\max} = \omega_{\mathrm{pd}}\,\frac{a}{d_{\mathrm{i}}}\sqrt{\eta_{\mathrm{b}}+\eta_{\mathrm{c}}}\,. \quad (3.86)$$

We give, in Fig. 6, the dependence of the maximum growth rate on the ratio of ion to electron temperatures for hydrogen and silicon (single ionized) plasmas. It can be seen from this figure that, with a decrease in τ, the maximum growth rate increases as the normalization contains a factor $\tau^{-3/2}$. The results given on the left hand side of Fig. 6 correspond to conditions close to those in laboratory experiments for plasma-dust crystals and plasma etching, while the results on the right hand side of Fig. 6 correspond more to astrophysical conditions, where the electron and ion temperatures are often equal.

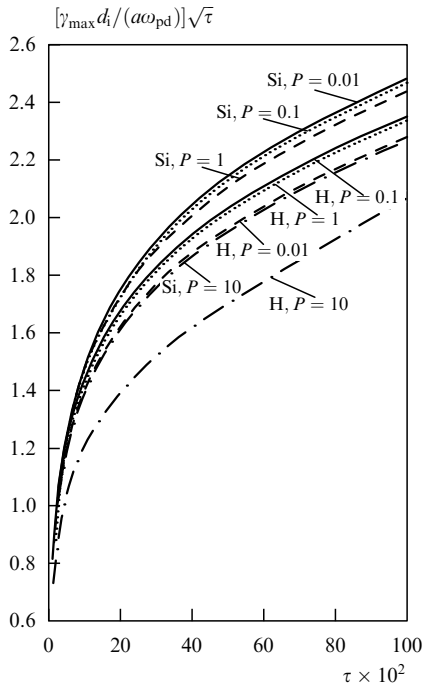

Figure 6. The dependence of the maximum growth rate of the electrostatic self-contraction instability of dusty plasma on the temperature ratio, $\tau = T_i/T_e$, and on the plasma density, $P = n_d Z_d/n_e$, for hydrogen plasma (the lines marked by H) and for silicon plasma containing single ionized ions (the lines marked by Si).

The maximum growth rate has the following dependence on the plasma parameters:

$$\gamma_{\max} \propto a\sqrt{\frac{n_d n_e}{T_i^{3/2}}}\,. \tag{3.87}$$

The growth rate in the experiments on plasma etching increases in time, with the growth, in size, of the dust particles, but in every case the time of the development of instability is shorter than the time of the experiment — of the order of 10^{-3} s or 10^{-2} s. This most likely explains the appearance of compact and stable dust clouds in all of the experiments on dust etching. In the case where neutrals are important in attraction, the effect of the neutrals can be taken into account with η_n.

3.9 General theory of self-attraction instability and the role of dissipative processes

We obtained that the instability of self-attraction can be so strong that the critical wavelength could be of the order of, or less than the mean free path for interaction of plasma particles with dust particles. The effective mean free path for electrons is $(m_e/m_i)^{1/4}$, less than the effective mean free path for ions, in the case that the temperatures of electrons and ions are equal. One should remember that the effective collision frequency contains the square root of the product of the effective frequency in the continuity equation, and effective frequency in the momentum equation, and that the former does not contain the mass ratio due to the equality of ion and electron fluxes on the dust particles.

Experiments were performed in gases containing heavy ions, with recent experiments on dust crystals performed in Kr, with atomic weight 80. The mass ratio mentioned competes with the temperature ratio term, which, due to the same arguments, is proportional to $(T_i/T_e)^{3/4}$; i.e., the factor $1/30$ is competing with the factor $1/300$. This indicates that the range in wave numbers where the wavelength is larger than the mean free path for electrons, but less than the mean free path for the ions, is narrow, and the best attempt will be to consider all intermediate cases exactly, not using approximate analytic expressions. Therefore, we use numerical methods to solve the dispersion relation.

It is useful, for this purpose, to introduce another normalization of the wave numbers and frequencies. The frequencies will be normalized with $\omega_{pd} a/d_i$, which is the characteristic growth rate of instability, and the wave numbers will be normalized with a/d_i^2, the characteristic size of dust molecules, and probably the size of the crystal lattice in plasma-dust crystals.

For this normalization, in the case that we omit factors of the order of unity (for $P, z \approx 1$), the dust-sound frequency is described by $\omega_{ds}(k) = kd/d_i$. We restrict this consideration to the case where $a \ll d_i$, as before. We will also take into account the imaginary parts in the dispersion relation [64], since, although they are small, it is necessary to find whether the imaginary parts lead to the damping of, or amplification of waves in the range where the attraction does not create an aperiodic instability (i.e. for $k > k_{cr}$).

The reason why the dissipative processes can lead to instability is that the dusty plasma is an open system. The reason why the dissipative processes are weak is that, as usual, the relative order of the dissipative terms in the equations is determined by the ratio of the frequency to the collision frequency; the frequency is low because the dust sound velocity is slow, and the collision frequency is high because the charging frequency is high. This causes the influence of dissipative processes on attraction instability to be small in the range of wave numbers substantially above the threshold of the aperiodic instability of self-contraction.

In the absence of self-attraction instability, the dissipation effects can lead either to weak dissipation or weak amplification of dust-sound waves. The condition $\omega/\nu_{ch} \ll 1$, in the notations accepted here, has the form

$$\mu_d \ll \frac{a}{d_i}\,, \qquad P \gg 1\,, \qquad \mu \ll \frac{Pa}{d_i}\,, \qquad P \ll 1\,, \tag{3.88}$$

where,

$$\mu_d = \frac{v_{sd}}{v_{Ti}}\frac{d_i}{d}\,. \tag{3.89}$$

In typical laboratory experiments ($T_e \approx 1$ eV, $\tau \approx 10^{-2}$, $n_{0,e} \approx 3 \times 10^9$, $P \approx 1$), the damping will not be weak only for $a < 10^{-6}$ cm, which corresponds to the smallest size usually detected.

We will consider the dissipative processes by means of perturbation theory. The dispersion equation, $\epsilon_{\omega,k} = 0$, in the approximation where one neglects the dissipative processes, but for arbitrary relationship between the wavelength and the mean free path in the dimensionless variables accepted here, has the form

$$\alpha(k) = \beta(k)\,\frac{k^2}{[\omega(k)]^2 - (\pi/4)\eta_r k + \eta_c + \eta_b}\,, \tag{3.90}$$

where

$$\alpha(k) = \frac{k^2}{\eta_\mathrm{i}}\left[\frac{1+\tau+P}{1+P} + \frac{(\tau+z)P(\tau+1)}{z(1+P)(1+\tau+z)}\right] + \frac{P(\tau+z)+z(1+\tau+P+z)}{z(1+P)(1+\tau+z)}\,\tau + \frac{\eta_\mathrm{e}}{(1+P)(1+\tau+z)}, \tag{3.91}$$

$$\beta(k) = \frac{k^2}{\eta_\mathrm{i}} + \frac{P(\tau+z)}{z(1+\tau+z)} + \frac{1+P}{P} + \frac{\tau+z}{1+\tau+z} + \eta_\mathrm{e}\left(\frac{1}{1+\tau+z} - \frac{1}{P}\right), \tag{3.92}$$

$$\eta_\mathrm{i} = \frac{P^2(1+z)}{2\pi z^2(1+P)^2}\left(z + \frac{4}{3}\tau + \frac{2z^2}{3\tau}\ln\frac{d}{a}\right), \tag{3.93}$$

$$\eta_\mathrm{e} = (\tau+z)(1+P)^2\,\frac{\tau}{m} \times \frac{4+z+2z^2\ln(d/a)\sqrt{m\tau}/[3(\tau+z)]}{z+4\tau/3+(2z^2/3\tau)\ln(d/a)}. \tag{3.94}$$

In the case where the solution of Eqn (3.90) is complex, it describes the aperiodic instability of self-contraction. The dissipative processes lead to the following small corrections:

$$\omega = \omega(k) - \mathrm{i}\mu_\mathrm{d}\Gamma(k), \tag{3.95}$$

where $\omega(k)$ satisfies the Eqn (3.90), and

$$\Gamma(k) = k^2\,\frac{\alpha'(k)\beta(k) - \beta'(k)\alpha(k)}{2[\alpha(k)]^2}, \tag{3.96}$$

$$\alpha'(k) = \frac{k^2(1+\tau+P)}{\eta_\mathrm{i}(1+P)}\left(\frac{1}{\bar\zeta_\mathrm{i}} + \frac{1}{\tilde\zeta_\mathrm{i}}\right) + \frac{1+\tau+P+z}{(1+P)(1+\tau+z)} \times \left[\frac{\tau}{\zeta_\mathrm{ch}} + \eta_\mathrm{e}\left(\frac{1}{\zeta_\mathrm{ch}} + \frac{1}{\bar\zeta_\mathrm{i}} + \frac{1}{\tilde\zeta_\mathrm{i}} - \frac{1}{\bar\zeta_\mathrm{e}} - \frac{1}{\tilde\zeta_\mathrm{e}}\right)\right], \tag{3.97}$$

$$\beta'(k) = \frac{k^2}{\eta_\mathrm{i}}\left(\frac{1}{\bar\zeta_\mathrm{i}} + \frac{1}{\tilde\zeta_\mathrm{i}}\right) + \frac{P(\tau+z)+(1+P)(1+\tau+z)}{(1+\tau+z)P}\,\frac{1}{\zeta_\mathrm{ch}} \times \frac{\eta_\mathrm{e}}{1+\tau+z}\left(\frac{1}{\bar\zeta_\mathrm{i}} + \frac{1}{\tilde\zeta_\mathrm{i}} - \frac{1}{\bar\zeta_\mathrm{e}} - \frac{1}{\tilde\zeta_\mathrm{e}} + \frac{1}{\zeta_\mathrm{ch}}\right) - \frac{\eta_\mathrm{e}}{P}\left(\frac{1}{\bar\zeta_\mathrm{i}} + \frac{1}{\tilde\zeta_\mathrm{i}} - \frac{1}{\bar\zeta_\mathrm{e}} - \frac{1}{\tilde\zeta_\mathrm{e}}\right), \tag{3.98}$$

and

$$\left\{\bar\zeta_{\mathrm{e,i}}, \tilde\zeta_{\mathrm{e,i}}, \zeta_\mathrm{ch}\right\} = \frac{d_\mathrm{i}}{a}\,\frac{1}{\omega_\mathrm{pi}}\left\{\bar\eta_{\mathrm{e,i}}, \tilde\eta_{\mathrm{e,i}}, \eta_\mathrm{ch}\right\}. \tag{3.99}$$

The expressions $\alpha'(k)$ and $\beta'(k)$ both contain negative and positive terms, and without exact calculations it is difficult to determine the sign of the imaginary part. For negative sign, the instability is related to the release of electrostatic energy accumulated on dust particles.

We will give the results of some numerical calculations [64], in the range

$$10^{-2} \leqslant P \leqslant 10, \quad 10^{-2} \leqslant \tau \leqslant 10^3$$

for hydrogen, argon and silicon plasmas. In the range of very small τ, namely $10^{-2} < \tau < 10^{-1}$, which is of interest for laboratory experiments, the results are sensitive to the exact values of τ and P.

Figure 7 contains the results concerning the calculation of the critical wave numbers k_cr as functions of dust density, P, and temperature ratio, τ, for hydrogen and silicon. The critical values of the wave numbers change little over a broad range of τ, but fall abruptly in the range $\tau < 10^{-1}$. They also decrease with an increase in P. The long wavelength dust-sound wave branch survives only for $P > 1, 10$, and τ close to 10^{-2}; i.e., it exists in a rather limited range of wave numbers in the conditions of existing experiments.

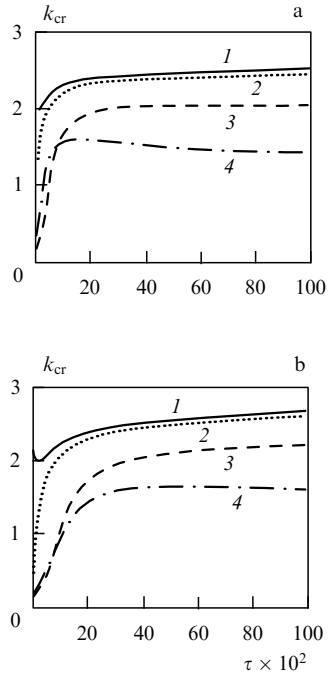

Figure 7. The critical value k_cr for hydrogen (a) and silicon (b) plasma as a function of the temperature ratio, τ, in the range $10^{-2} < \tau < 1$: *1* corresponds to $P = 0.02$, *2* corresponds to $P = 0.1$, *3* corresponds to $P = 1$, and *4* corresponds to $P = 10$. Similar curves were obtained for Si and Ar.

More often, the critical wave numbers are in the range where the wavelength is comparable to the mean free path. This means that the instability is strong. However, one can also recognize the existence of a stable flat spectrum in a rather broad range of wave numbers, corresponding to the transition from long wavelength dust-sound waves to short wavelength dust-sound waves (see Fig. 8).

Figure 9 gives the dependence of the growth rate of self-contraction on wave numbers for the case where they are less than the critical wave number, and on the temperature ratio. Figure 10 gives the absorption coefficient (which is caused by dissipative processes) as a function of temperature ratio and the wave number.

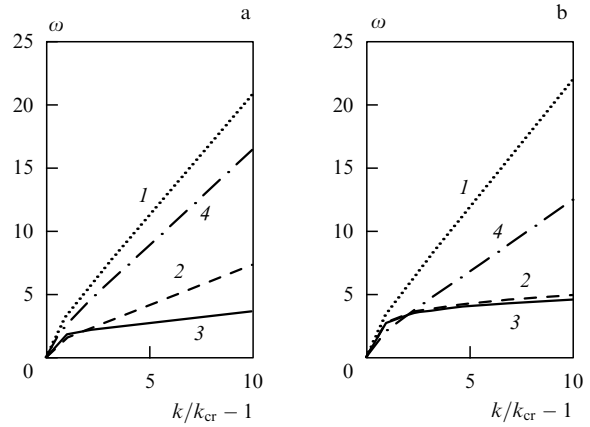

Figure 8. The dependence of the frequency on the wave number for $k > k_{cr}$. The zero on the x axis corresponds to $k = k_{cr}$. For all curves, $\tau = 10^{-2}$. *1* corresponds to $P = 0.01$, *2* corresponds to $P = 0.1$, *3* corresponds to $P = 1$, and *4* corresponds to $P = 10$ for hydrogen (a) and silicon (b) plasmas. Similar curves were obtained for Si and Ar.

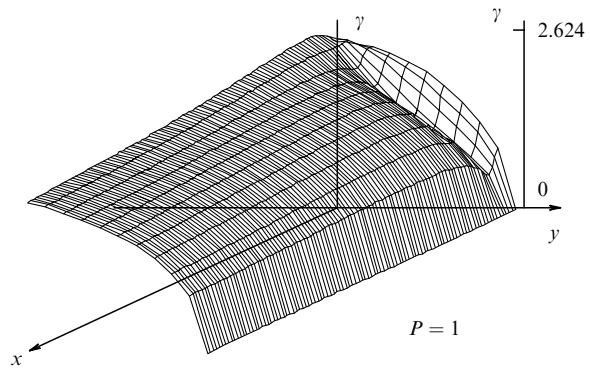

Figure 9. The dependence of the growth rate of the instability of self-contraction on the wave number for $k < k_{cr}$. On the x axis, the parameter τ ranges from 10^{-2} up to 1, and on y axis, the parameter k/k_{cr} randes from 0 up to 1. The plasma is hydrogen. Similar curves were obtained for Si and Ar.

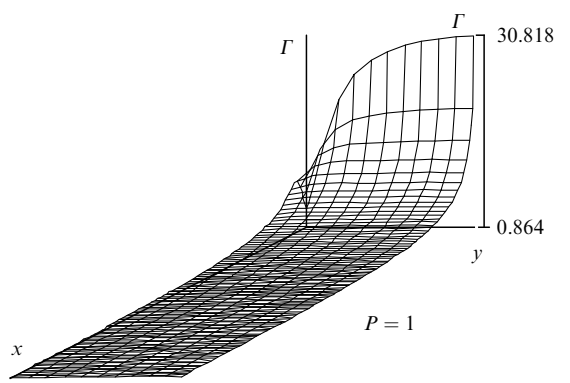

Figure 10. The dependence of the absorption coefficient Γ on the wave number (the y axis), ranging from k_{cr} up to $10k_{cr}$, and on the temperature ratio, τ (the x axis), ranging from 0.01 up to 1, for hydrogen plasma. Similar curves were obtained for Si and Ar.

It is clear that the relative value of absorption increases substantially for small values of the temperature ratio, but due to the low value of the coefficient μ_d, this absorption cannot prevent the development of instabilities, even for small τ values. As all values in this case are determined by the maximum dust sizes, the estimates show that the instability is prevented only in the case where the maximum size is not larger than 10^{-2} μm. However, this corresponds only to the very early stages of gas discharges used for etching. The appearance of negative values for the absorption coefficient, i.e., the appearance of instability, was observed in numerical calculations for wave numbers larger than its critical value, only for large dust densities ($P > 10$, see Fig. 11)

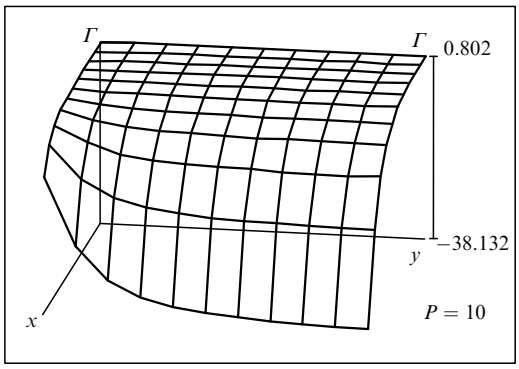

Figure 11. Illustration of the appearance of negative values of the absorption coefficient. The coefficient of absorption is given as a function of the temperature ratio τ (the x axis), ranging from 1 to 10, and of the wave number k, ranging from 0 up to k_{cr}. The plasma is hydrogen, $P = 10$. Similar curves were obtained for Si and Ar.

In general, this investigation shows that attraction instability can develop over a broad range of dusty plasma parameters. The dissipative processes do not substantially influence the attraction instability, but for high dust densities, the dissipative processes can amplify the dust-sound waves.

3.10 Sound waves in the neutral component and their interaction with dust-sound waves

Above, we discussed the possibility for the existence, in dusty plasmas, of two types of sound waves: ordinary sound waves and dust sound waves. We considered mainly the charged components of the dusty plasma. In the presence of a large neutral density, however, ordinary sound waves propagate mainly in the neutral component. In the case when the frequency of the wave is much less than the collision frequency between ions and neutrals, the relative velocity of the ions and neutrals in perturbations tends to zero, and the ions and neutrals in the perturbations move together.

The velocities of ordinary sound waves in neutral and plasma components do not differ substantially. As a result of friction between neutrals and ions the sound wave velocity for frequencies much less than the friction frequency, differ from the frequency of usual sound in the ion or neutral component, only by a factor of the order of unity.

A qualitatively different situation appears due to the interaction of dust-sound waves with ordinary sound waves through collisions of neutrals with dust. Firstly, the cross-section of such collisions depends on the size of the dust

particles, and secondly, the velocity of dust-sound waves differ substantially from the velocity of ordinary sound waves in the neutral component.

It is also possible that the velocity of ordinary sound is altered, lowered by dust loading. The two sounds in the presence of momentum exchange between neutrals and dust are mixed, and are both changed. Not only is ordinary sound loaded with dust, dust-sound is also altered by the neutrals [58].

One can write an equation for the disturbance of the neutral motions, taking into account the pressure force, $(-\partial n_{\mathrm{n}} T_{\mathrm{n}}/\partial \mathbf{r})$ for which the Fourier components correspond to

$$-\mathrm{i}\mathbf{k} v_{\mathrm{s,n}}^2 \left(\frac{\delta n_{\mathrm{n}}}{n_{\mathrm{n}}}\right) m_{\mathrm{n}} n_{\mathrm{n}}\,, \quad v_{\mathrm{s,n}} = \sqrt{\frac{T_{\mathrm{n}}}{m_n}}\,,$$

and also the force of friction between neutrals and dust $n_{\mathrm{n}} m_{\mathrm{n}} \nu_{\mathrm{n}} (\mathbf{v}_{\mathrm{n}} - \mathbf{n}_{\mathrm{d}})$. By using the continuity equation, we get:

$$\omega^2 n_{\mathrm{n}} m_{\mathrm{n}} \frac{\delta n_{\mathrm{n}}}{n_{\mathrm{n}}} + n_{\mathrm{n}} m_{\mathrm{n}} \nu_{\mathrm{n}} \left(\frac{\delta n_{\mathrm{n}}}{n_{\mathrm{n}}} - \frac{\delta n_{\mathrm{d}}}{n_{\mathrm{d}}}\right) = k^2 v_{\mathrm{s,n}}^2 \frac{\delta n_{\mathrm{n}}}{n_{\mathrm{n}}} n_{\mathrm{n}} m_{\mathrm{n}}\,. \tag{3.100}$$

Obviously, in this equation, we can cancel the common factor $n_{\mathrm{n}} m_n$, but we will leave it in this form for now, as in the corresponding equation for the dust component, the conservation of momentum in dust-neutral collisions is readily seen. The equation for dust disturbances has the form:

$$\omega^2 n_{\mathrm{d}} m_{\mathrm{d}} \frac{\delta n_{\mathrm{d}}}{n_{\mathrm{d}}} + n_{\mathrm{n}} m_{\mathrm{n}} \nu_{\mathrm{n}} \left(\frac{\delta n_{\mathrm{d}}}{n_{\mathrm{d}}} - \frac{\delta n_{\mathrm{n}}}{n_{\mathrm{n}}}\right) = k^2 v_{\mathrm{s,d}}^2 \frac{\delta n_{\mathrm{d}}}{n_{\mathrm{d}}} n_{\mathrm{d}} m_{\mathrm{d}}\,. \tag{3.101}$$

From these equation, one finds the dispersion equation which connects the two sound wave branches:

$$(\omega^2 - k^2 v_{\mathrm{s,n}}^2)(\omega^2 - k^2 v_{\mathrm{s,d}}^2) + \mathrm{i}\omega\nu_{\mathrm{n}} \times \left[(\omega^2 - k^2 v_{\mathrm{s,d}}^2) + \frac{n_{\mathrm{n}} m_{\mathrm{n}}}{n_{\mathrm{d}} m_{\mathrm{d}}}(\omega^2 - k^2 v_{\mathrm{s,n}}^2)\right] = 0\,. \tag{3.102}$$

Weakly damped waves exist only in two cases:

(1) The case where, in the first approximation, one neglects the imaginary part of Eqn (3.102); there exist two branches which are, to a certain approximation, independent and are weakly damped due to the imaginary part describing the dust-neutral collisions.

(2) The case where the frequency of the wave is much less than the collision frequency ν_{n}, such that only one branch exists, making the imaginary part of the dispersion relation zero. This is weakly damped due to the presence of the real part of the dispersion relation:

$$\omega^2 = k^2 \left(v_{\mathrm{s,n}}^2 \frac{n_{\mathrm{n}} m_{\mathrm{n}}}{n_{\mathrm{n}} m_{\mathrm{n}} + n_{\mathrm{d}} m_{\mathrm{d}}} + v_{\mathrm{s,d}}^2 \frac{n_{\mathrm{d}} m_{\mathrm{d}}}{n_{\mathrm{d}} m_{\mathrm{d}} + n_{\mathrm{n}} m_{\mathrm{n}}}\right) \equiv k^2 v_{\mathrm{s,nd}}^2. \tag{3.103}$$

This sound branch can be considered as a sound wave in a neutral component loaded with dust, or as dust-sound loaded with neutrals. This depends on which of the two terms in the brackets of Eqn (3.103), is dominant. In the case where the first term dominates, the velocity in the neutral gas is decreased by the ratio of the mass density in the neutral component, to the total mass density, including the dust component. In the early stages of etching experiments, for example, the dust mass density, of the order of 10^8 cm^{-3}, is approximately one order of magnitude less than the mass density of neutrals; but in the later stages of the experiment, this ratio is inverted. In dust-molecular clouds, a fairly accurate estimate for the maximum dust size is unknown, but according to current belief, the mass density in the dust component is an order of magnitude larger than that of the neutral component. In typical dust-crystal experiments, the mass density of the dust component 10^{-2} g cm^{-3}, is much larger than the mass density of the neutral component 10^{-8} g cm^{-3}.

We will estimate the change to the value of the dust-sound velocity by the neutral component for dust-crystal experiments. For $n_{\mathrm{d}} m_{\mathrm{d}} \gg n_{\mathrm{n}} m_{\mathrm{n}}$, using Eqn (3.57), we find:

$$v_{\mathrm{s,n\,d}}^2 = \frac{T_{\mathrm{i}} P}{m_{\mathrm{d}}} \left(\frac{Z_{\mathrm{d}}}{1+P} + N \frac{T_{\mathrm{n}}}{Z_{\mathrm{d}} T_{\mathrm{i}}}\right), \tag{3.104}$$

where $N = n_{\mathrm{n}}/n_{\mathrm{e}}$ is the degree of ionization, inverted. For plasma-dust crystal experiments, as a rule, $Z_{\mathrm{d}}^2 > 10^8 - 10^9$, while the degree of ionization is not less than $10^{-6} - 10^{-7}$, which means that the second term of Eqn (3.104), describing the contribution of neutrals, is small. The same is true for etching experiments.

We postponed the discussion of neutrals up to this section, as the effects produced by neutrals are important only in the subsequent sections. The role of neutrals is important in dust-molecular clouds and in plasmas of atmospheric pressure. The long existence of such clouds, and their self-contraction, can be due both to gravitational effects and to the plasma and neutral bombardment with dust particles. The mass density of dust, in this case, is of the order of, or larger than the mass density of neutrals.

3.11 Electro-gravitational dust self-contraction instability

The exchange of momentum between dust and neutrals (with frequency ν_{n}) is important not only in conditions of dust attraction due to neutral and plasma particle bombardment, but also in the conditions of gravitational attractions between all components [58]. For this reason, we will consider the dispersion relation for the interaction between ordinary sound waves and dust-sound waves, taking into account not only the friction between neutrals and dust, but also all the forces of attraction and repulsion acting on the dust particles, and the gravitational forces acting on the particles of all components. Thus, a more general form of Eqn (3.102) is:

$$\begin{aligned}
&\left(\omega^2 - k^2 v_{\mathrm{sd}}^2 + (\eta_{\mathrm{b}} + \eta_{\mathrm{c}} + \eta_{\mathrm{n}}) \omega_{\mathrm{pd}}^2 \frac{a^2}{d_{\mathrm{i}}^2}\right)(\omega^2 - k^2 v_{\mathrm{s}}^2) \\
&\quad + 4\pi G m_{\mathrm{n}} n_{\mathrm{n}} \left(\omega^2 - k^2 v_{\mathrm{sd}}^2 + (\eta_{\mathrm{b}} + \eta_{\mathrm{c}} + \eta_{\mathrm{n}}) \omega_{\mathrm{pd}}^2 \frac{a^2}{d_{\mathrm{i}}^2}\right) \\
&\quad + 4\pi G n_{\mathrm{d}} m_{\mathrm{d}} (\omega^2 - k^2 v_{\mathrm{s}}^2) + \mathrm{i}\omega\nu_{\mathrm{n}} \frac{(n_{\mathrm{n}} m_{\mathrm{n}} + n_{\mathrm{d}} m_{\mathrm{d}})}{n_{\mathrm{d}} m_{\mathrm{d}}} \\
&\quad \times \left(\omega^2 - k^2 v_{\mathrm{s,n,d}}^2 + (\eta_{\mathrm{b}} + \eta_{\mathrm{c}} + \eta_{\mathrm{n}}) \omega_{\mathrm{pd}}^2 \frac{a^2}{d_{\mathrm{i}}^2}\right. \\
&\quad \left. \times \frac{n_{\mathrm{d}} m_{\mathrm{d}}}{(n_{\mathrm{n}} m_{\mathrm{m}} + n_{\mathrm{d}} m_{\mathrm{d}})} + 4\pi G (n_{\mathrm{n}} m_{\mathrm{n}} + n_{\mathrm{d}} m_{\mathrm{d}})\right) = 0.
\end{aligned} \tag{3.105}$$

Above, we discussed only the weakly damping modes, the frequency of which is either greater, or less than the frequency of momentum exchange between dust and other components. The intermediate case, where the frequency is of the order of that given for momentum exchange, was of no special interest. The qualitative difference between the consideration

of this and previous section, is that there can exist an instability even in the intermediate range of frequencies, and it can serve as a continuation of instability in other domains. On the other hand, even neglecting the new mechanisms of attraction, we will not return to the standard gravitational instability due to the possibility of existence of two branches of sound waves. We find, in the case of a low rate of dust neutral collisions:

$$(\omega^2 - k^2 v_{\rm sd}^2)(\omega^2 - k^2 v_{\rm s}^2) + 4\pi G m_{\rm n} n_{\rm n}(\omega^2 - k^2 v_{\rm sd}^2) + 4\pi G n_{\rm d} m_{\rm d}(\omega^2 - k^2 v_{\rm s}^2) = 0\,. \quad (3.106)$$

For $kv_{\rm s} \gg 4\pi G n_{\rm d} m_{\rm d}$, $4\pi G n_{\rm n} m_{\rm n}$, i.e. in the conditions where the usual gravitational instability does not develop, we find the following two approximate solutions to the Eqn (3.106):

$$\omega^2 = k^2 v_{\rm s}^2\,, \quad (3.107)$$

$$\omega^2 = k^2 v_{\rm sd}^2 - 4\pi G n_{\rm d} m_{\rm d} - (\eta_{\rm b} + \eta_{\rm c} + \eta_{\rm n})\omega_{\rm pd}^2 \frac{a^2}{d_{\rm i}^2}\,. \quad (3.108)$$

Equation (3.107) describes a stable, ordinary sound wave, while Eqn (3.108) describes the gravitational instability of a dust-sound wave, the critical size of which is much less than the Jeans size, namely, $k_{\rm cr} = \sqrt{4\pi G n_{\rm d} m_{\rm d}}/v_{\rm sd}$. Obviously, in both branches, the disturbances of both the dust density component, and the neutral density component, are present. This means that the gravitational instability is substantially changed. In the case that k increases, reaching $v_{\rm n}/v_{\rm s}$, the dispersion of both branches is changed, but one of them, which for small k corresponds to Eqn (3.107), will be stable, while the other, which for small k corresponds to Eqn (3.108), remains unstable. For $kv_{\rm s} \ll 4\pi G n_{\rm d} m_{\rm d}$, $4\pi G n_{\rm n} m_{\rm n}$, this unstable branch is transformed to the usual expression for Jeans instability,

$$\omega^2 = -4\pi G(n_{\rm n} m_{\rm n} + n_{\rm d} m_{\rm d})\,,$$

in which the total energy density of the neutrals and dust is present. Apart from this branch, another branch exists which is always stable. The new forces of attraction and repulsion due to the bombardment of dust, with the additional condition

$$kv_{\rm s} \gg \sqrt{\eta_{\rm b} + \eta_{\rm c} + \eta_{\rm n}}\,\frac{\omega_{\rm pd} a}{d_{\rm i}}\,,$$

modify Eqn (3.108) by adding to the right hand side the terms describing the attraction of dust particles,

$$(\eta_{\rm b} + \eta_{\rm c} + \eta_{\rm n})\frac{\omega_{\rm pd}^2 a^2}{d_{\rm i}^2}\,,$$

close to the threshold, all attraction factors are summed. The maximum growth rate, $\gamma_{\rm max}$, although it is determined by a more complicated combination of the different types of attraction, is

$$\gamma_{\rm max}^2 = \frac{1}{2}(\eta_{\rm b} + \eta_{\rm c}\eta_{\rm n})\omega_{\rm pd}^2 \frac{a^2}{d_{\rm i}^2} + 2\pi G(n_{\rm n} m_{\rm n} + n_{\rm d} m_{\rm d}) \pm \frac{1}{2}\left\{\left[(\eta_{\rm b} + \eta_{\rm c} + \eta_{\rm n})\omega_{\rm pd}^2 \frac{a^2}{d_{\rm i}^2} + 4\pi G(n_{\rm n} m_{\rm n} + n_{\rm d} m_{\rm d})\right]^2 + 4\pi G n_{\rm n} m_{\rm n}(\eta_{\rm b} + \eta_{\rm c} + \eta_{\rm n})\omega_{\rm pd}^2 \frac{a^2}{d_{\rm i}^2}\right\}^{1/2}. \quad (3.109)$$

Let us then consider the case where the collision rate between neutrals and dust is much larger than the other characteristic frequencies. Here, the two branches merge into one:

$$\omega^2 = k^2 v_{\rm s,dn}^2 - (\eta_{\rm b} + \eta_{\rm c} + \eta_{\rm n})\omega_{\rm pd}^2 \frac{a^2}{d_{\rm i}^2}\frac{n_{\rm d} m_{\rm d}}{(n_{\rm n} m_{\rm m} + n_{\rm d} m_{\rm d})} - 4\pi G(n_{\rm n} m_{\rm n} + n_{\rm d} m_{\rm d})\,, \quad (3.110)$$

in which a combined sound velocity (3.103) enters. This combined sound velocity, in laboratory experiments, as was predicted, is close to the dust-sound velocity, but in astrophysical conditions, it can be close to the ordinary sound or dust sound velocity.

3.12 Surface tension

The presence of attraction between dust particles leads to a new phenomenon of surface tension in the dust cloud. The coefficient of surface tension, α is known [65] to be equal to the work which is necessary to produce an increase in the surface of the cloud by 1 cm^2, and can be estimated as the energy per unit surface. Denoting the thickness of the surface layer by h, we find an estimate

$$\alpha = U_{\rm m} n_{\rm d} h\,. \quad (3.111)$$

To find an estimate of h is not a simple problem as it is not quite clear what the surface layer and what the surface structure of the dust cloud really is. The structures of dust clouds have mainly been investigated experimentally, and the most probable surface structure may be determined by different processes, and depends on the type of external ionization and the openness of the system. Therefore, we can only emphasize the qualitative consequences of the presence of surface tension and give some estimates.

Firstly, surface tension makes it possible for the existence of plasma-dust crystals within free boundaries, and they will have a spherical form. Numerical simulations [48] confirm this conclusion. Secondly, the boundaries of dust clouds can be due to the surface tension's being rather sharp, which is indeed observed in most experiments on plasma etching. The boundaries of planetary ring also sharp.

As concerns the theory of the structure of the surface layers of dust clouds, we can state that such problems should be treated self-consistently and nonlinearly — up to the present time such problems have been formulated improperly, not to mention their solutions. It is obvious that the boundary conditions, and the formulation of the problems, should be different in the case of volume ionization (as in the case of plasma etching or in interstellar clouds), and in the case where the plasma is injected from outside the dust cloud (which is partially the case for planetary rings). In the first case, a reasonable estimate of h can be several inter-dust distances, for example, $h \approx 10(3/4\pi n_{\rm d})^{1/3}$.

For dust clouds in laboratory experiments on etching, $h \approx 10^{-2}$ cm, and for $U_{\rm m} \approx 100$ eV, and $n_{\rm d} \approx 10^8$, we find a rather large value for the coefficient of surface tension, $\alpha \approx 10^{-4}$ erg cm^{-2}, which is approximately 6 (only), a magnitude less than the surface tension coefficient of water (but the density of neutrals is approximately 7 orders of magnitude less than the density of water). For planetary rings, their thickness is of the order of the plasma particle mean free path, i.e., for surface tension, the rings are thin films with the minimum possible thickness. This result, in itself, is of interest. In general, surface tension should lead to spatial

localization of dust clouds, which can be considered as an indication of the self-organization of dust structures.

3.13 Correlations in dusty plasma, soft modes and the appearance of distant correlations

The presence of attraction between dust particles raises the problem concerning the existence of distant order within the pair correlation function in dusty plasmas. We will not consider here the case of plasma-dust liquids or plasma-dust crystals, considering more the simple question of the change in the correlation function introduced by dust present in a plasma, or more precisely, the correlation function in a dusty plasma under the conditions where the plasma-dust collision rate is high, which physically means that the inverse characteristic time of correlation is much less than the plasma particle – dust collision frequency (the latter was shown to exceed the binary ion-ion collision frequency by the large factor Z_{d}). We will also suppose that, in the dusty plasma, the kinetic energy of dust is much larger than the potential energy of dust attraction (which is of the order of the dust-molecular binding energy).

The dust-molecular binding energy is the consequence of the openness of the dusty plasma system and has nothing in common with the chemical quantum binding energy in ordinary matter, related to the overlapping of the wave functions of quantum particles. In the absence of dust, with a purely classical approach, the pair correlation function in a plasma $g(r)$, has no minima or maxima and smoothly falls with distance, repeating the shape of the Debye screening potential: $g(r) \propto (1/r)\exp(-r/d)$. Only for very small particle separations, due to strong correlations in the pair correlation function in plasmas in the absence of dust, can there be maxima and minima.

We will show that, in presence of dust, with its additional forces of attraction and repulsion, the pair correlation function changes drastically, even in the gaseous state where the kinetic energy of dust particles is much larger than the potential energy of dust attraction. It will not correspond to the Debye screening correlation function, which seems to be natural. It also presents some features of distant order. Although the maxima and minima in the pair correlation function, in this case, indeed appear to be the starting point of the consideration which assumes that the kinetic energy of dust is larger than the potential energy, we are unable to consider the transition to the liquid or crystalline states. Nevertheless, the results given below indicate that dusty plasma, with sufficient dust density, can be considered as being in a state more easy convertible to liquid or crystal, than in the absence of dust. This also seems natural, as dusty plasma is more capable of self-organization than the other states of matter.

Here, and below in the definition of the pair correlation function, we will suppose that as $r \to \infty$, it tends to zero (this comment is made because in the literature [1, 2] another definition of the pair correlation function is often used, $g(r) \to 1$ as $r \to \infty$; it is obvious that these two definitions differ from each other only by unity). The pair correlation function, in the absence of dust given above in the form of the Debye screened Coulomb potential, was obtained by the perturbation method as the first non-vanishing term describing the correlations. In the case that such an approach gives a correlation function with maxima and minima, one can say that the probability of finding two particles at a certain distance is larger than in others, although the kinetic particle energy is larger than the possible binding energy, and in the majority of cases, the particles will enter, and then leave the potential wells. However, some particles with low energy can be captured by the wells. It is certain that such a situation is not possible in the absence of dust.

As is usual, the theoretical results obtained by using a small parameter are valid, to an order of magnitude, in the case where this parameter is of the order of unity. If the theory of weak correlations leads to some maxima and minima in the pair correlation function, this will show a tendency towards distant correlations, and one can expect that the distant correlations will appear as soon as the particles' kinetic energies are of the order of the interaction energy, where most of the particles can become trapped in the potential wells. In this case, the formation of structures is not related to strong correlations but with correlations of the order of unity. This is not the case for a plasma in the absence of dust, and we know that strong correlations are needed in this case to form crystalline structures, where the energy of interaction is hundreds of times larger than the kinetic energy.

In the case that weak correlations show a tendency towards distant correlations with maxima and minima in the correlation function, one can hope that structures such as crystals can be formed when the potential energy of interaction is of the order of the kinetic energy. Here, we hope to proceed with the theory of correlation, discussing the approaches of the renormalization theory of correlations, the 'covering' of weak correlations by polarization clouds, etc.

If the situation indeed changes radically in the presence of dust, due to the new interactions in the dusty plasma discussed above, one can hope that dust-crystals can be formed for intermediate, and not strong correlations. It also seems natural that the first step in the investigation of correlations in dusty plasmas should be made by an investigation into weak correlations. A description of such a theory is given in this section [66].

In the construction of a theory of weak correlations in a dusty plasma we start with Klimontovich approach [67], assuming that the discreteness in the system should first be considered for dust particles only, and that the fluctuations of plasma particles, which are of a much smaller scale, follow the dust fluctuations according to the linear hydrodynamic relations used above in the continuity and momentum equations.

The basis of such an approach is that the dust particles, being much larger than the plasma particles, show larger degree of discreteness and their fluctuations will be larger than those of plasma particles. On the other hand, for large scale fluctuations, one can average the small scale fluctuation and suppose that the fluctuations of plasma particles follow the fluctuations of dust particles. Using the standard methods [68, 69], we introduce the distribution function for dust particles $f_{\mathbf{p}}^{\mathrm{d}}(\mathbf{r}, t)$, normalized according to the relation

$$n_{\mathrm{d}}(\mathbf{r}, t) = \int f_{\mathbf{p}}^{\mathrm{d}}(\mathbf{r}, t)\,\frac{\mathrm{d}^3 p}{(2\pi)^3}\,,$$

(the charge of dust particles follows the dust density fluctuations). We introduce the distribution function, averaged over fluctuations $\Phi_{\mathbf{p}}^{\mathrm{d}}(\mathbf{r}, t)$, where the density averaged over fluctuations is

$$N_{\mathrm{d}} = \int \Phi_{\mathbf{p}}^{\mathrm{d}}(\mathbf{r})\,\frac{\mathrm{d}^3 p}{(2\pi)^3}\,;$$

we also introduce the fluctuations of these values as deviations of the exact values from the averaged ones $\delta f_{\mathrm{p}}^{\mathrm{d}}(\mathbf{r},t)$ and $\delta n^{\mathrm{d}}(\mathbf{r},t)$. The correlation function, $S(\mathbf{k},\omega)$, for stationary and homogeneous dusty plasma, we define with the following relation containing the Fourier components of the density variations:

$$\langle \delta n^{\mathrm{d}}_{\mathbf{k},\omega} \delta n^{\mathrm{d}}_{\mathbf{k}',\omega'} \rangle = \frac{1}{(2\pi)^3} N_{\mathrm{d}} S^{\mathrm{d}}_{\mathrm{n}}(\mathbf{k},\omega)\delta(\mathbf{k}+\mathbf{k}')\delta(\omega+\omega') . \tag{3.111}$$

For non-correlated particles we use the notation $S^{\mathrm{d},(0)}_{\mathrm{n}}(\mathbf{k},\omega)$, and the normalization

$$\int_{-\infty}^{+\infty} S^{\mathrm{d},(0)}_{\mathrm{n}}(\mathbf{k},\omega)\,\mathrm{d}\omega = 1 . \tag{3.112}$$

Then, the pair correlation function's tendency to zero for $r \to 1$, is determined by the relation

$$g^{\mathrm{d}}_{\mathrm{n}}(r) = \left(\int_{-\infty}^{+\infty} S^{\mathrm{d}}_{\mathrm{n}}(\mathbf{k},\omega)\,\mathrm{d}\omega - 1 \right) \exp(\mathrm{i}\mathbf{k}\cdot\mathbf{r})\,\mathrm{d}^3k . \tag{3.113}$$

We generalize the standard methods described in [67] by including the new forces of attraction and repulsion at large distances. In writing down these relations we will not use the special normalizations which were made above. We have,

$$S^{\mathrm{d}}_{\mathrm{n}}(\mathbf{k},\omega) = \frac{S^{\mathrm{d},(0)}(\mathbf{k},\omega)}{|\epsilon^{\mathrm{eff}}_{\mathbf{k},\omega}|^2} \Gamma_{\mathbf{k},\omega} , \tag{3.114}$$

where,

$$\frac{1}{\epsilon^{\mathrm{eff}}_{\mathbf{k},\omega}} = \frac{1}{\epsilon_{\mathbf{k},\omega}} + \frac{\pi}{4}\eta_{\mathrm{r}} ka - \frac{a^2}{d_{\mathrm{i}}^2}(\eta_{\mathrm{b}} + \eta_{\mathrm{c}} + \eta_{\mathrm{n}}) \tag{3.115}$$

and

$$\Gamma_{\mathbf{k},\omega} = \frac{|1 + \epsilon^{\mathrm{eff}}_{\mathbf{k},\omega} - \epsilon^{\mathrm{d}}_{\mathbf{k},\omega}|^2}{\left|1 + (\epsilon^{\mathrm{d}}_{\mathbf{k},\omega})[(\pi/4)\eta_{\mathrm{r}} ka - (a^2/d_{\mathrm{i}}^2)(\eta_{\mathrm{b}} + \eta_{\mathrm{c}} + \eta_{\mathrm{n}})]\right|^2} . \tag{3.116}$$

Here, $\epsilon^{\mathrm{d}}_{\mathbf{k},\omega}$ is the general kinetic expression for the dust component, in which only the electric forces due to dust charge are taken into account, though without the new attraction and repulsion forces (mentioning that, in one of the previous sections, a simple expression for this value, in the form $1 - \omega_{\mathrm{pd}}^2/\omega^2$, was used). The value $\epsilon_{\mathbf{k},\omega}$, in (3.115), corresponds to the total dielectric permittivity, in which the contributions of both the electrons and ions are taken into account, according the scheme of the previous section, with the generalization of the simplest dust response to the total kinetic dust dielectric permittivity, $\epsilon^{\mathrm{d}}_{\mathbf{k},\omega}$.

In the limit of a one-component plasma (as in Ref. [1]), or in the case where we are considering the limit of only the dust component, we find the results given in [1]: $\epsilon^{\mathrm{eff}} = \epsilon^{\mathrm{d},E}$ and $\Gamma_{\mathbf{k},\omega} = 1$. For the approach used here, ϵ^{eff} is of the order of $d_{\mathrm{i}}^2/a^2 \gg 1$ (in the case where one neglects, for simplicity, the contribution due to neutrals in the dust attraction). Indeed, the last two terms in the expression (3.104) for $1/\epsilon^{\mathrm{eff}}$, after the introduction of the previous section's normalization, are easy to estimate, and have the order a^2/d_{i}^2. For the same normalization, we have:

$$\epsilon_{\mathbf{k},\omega} = 1 + \frac{1}{(\bar{k})^2 N(\bar{k})} \frac{d_{\mathrm{i}}^2}{a^2} \left(\alpha(\bar{k}) + \beta(\bar{k}) \times \frac{\bar{k}^2(\epsilon^{\mathrm{d},E}_{\mathbf{k},\omega} - 1)}{1 + (\epsilon^{\mathrm{d},E}_{\mathbf{k},\omega} - 1)[(\pi/4)\eta_{\mathrm{r}}\bar{k} - \eta_{\mathrm{c}} - \eta_{\mathrm{b}} - \eta_{\mathrm{n}}]} \right) , \tag{3.117}$$

where,

$$N(k) = \frac{\tau + z}{1 + \tau + z} + \frac{\bar{k}^2}{\eta_{\mathrm{i}}} . \tag{3.118}$$

Assuming $\epsilon^{\mathrm{eff}} \gg \epsilon^d - 1$ we find

$$S^{\mathrm{d}}(\mathbf{k},\omega) - S^{\mathrm{d},0}(\mathbf{k},\omega) \approx -S^{\mathrm{d},0}(\mathbf{k},\omega)\,\frac{2\mathrm{Re}[\epsilon^{\mathrm{eff}}_{\mathbf{k},\omega}(\epsilon^{\mathrm{d}}_{\mathbf{k},\omega} - 1)]}{|\epsilon^{\mathrm{eff}}_{\mathbf{k},\omega}|^2} . \tag{3.119}$$

For dielectric permittivity, one can use the standard kinetic expression, which, for the normalization of wave numbers and frequencies introduced above, can be written in the form ($\bar{k} = kd_i^2/a$):

$$\epsilon^{\mathrm{d}}_{\mathbf{k},\omega} = 1 + \frac{1}{\bar{k}^2\tau_{\mathrm{d}}^2} W\left(\frac{\bar{\omega}}{\bar{k}\sqrt{2}\tau_{\mathrm{d}}}\right) , \tag{3.120}$$

where

$$\tau_{\mathrm{d}} = \sqrt{\frac{(1+P)}{PZ^{\mathrm{d}}}\frac{T_{\mathrm{d}}}{T_{\mathrm{i}}}} , \tag{3.121}$$

$$W(x) = 1 - 2x\exp(-y^2)\int_0^x \exp(t^2) + \mathrm{i}\sqrt{\pi}x\exp(-x^2) . \tag{3.122}$$

The pair correlation function can now be written as a sum of two terms — the first following the potential of dust molecules, $g^{\mathrm{m}}(r)$, and the second describing the additional long range correlations, $g^l(r)$ [67]:

$$g^{\mathrm{d}}(r) = g^{\mathrm{m}}(r) + g^l(r) , \tag{3.123}$$

$$g^{\mathrm{m}} = \frac{\pi^2 a^5}{d_{\mathrm{i}}^8 \tau_{\mathrm{d}}^2}\left[\frac{1}{2\rho^2}\eta_{\mathrm{r}} - \frac{1}{\rho}(\eta_{\mathrm{b}} + \eta_{\mathrm{c}} + \eta_{\mathrm{n}})\right] , \tag{3.124}$$

$$g^l(r) = \frac{4\pi a^5}{d_{\mathrm{i}}^8 \tau_{\mathrm{d}}^2 \rho}\frac{\partial^2}{\partial\rho^2}\int_0^\infty \sin(\bar{k}\rho)\,\frac{d\bar{k}}{\bar{k}}\int_0^\infty \exp(-x^2)\,\mathrm{d}x \times \mathrm{Re}\left\{ W^*(x)N(\bar{k})\left[\alpha(\bar{k}) + \beta(\bar{k}) \times \frac{\bar{k}^2 W(x)}{\tau_{\mathrm{d}}^2\bar{k}^2 + W(x)(\pi\bar{k}\eta_{\mathrm{r}}/4 - \eta_{\mathrm{b}} - \eta_{\mathrm{c}})}\right]^{-1}\right\} , \tag{3.125}$$

$$\rho = \frac{ra}{d_{\mathrm{i}}^2} . \tag{3.126}$$

The molecular correlation function has an extremum at distances where ρ is of the order of unity, i.e., at the size of dust molecules. This simple result means that it is more probable to find another dust particle at a distance $\rho \sim 1$. The other part of the pair correlation function, g^l, has several maxima and minima, with an amplitude which indicates a distant order of correlations.

In the theory of Wigner crystallization, the beginning of crystallization is related to the appearance of a soft charge density mode, which, in g^l under the present consideration, corresponds to the zeros in the denominator of the integrand, in the expression for the correlation function, or

$$\epsilon_{\mathbf{k},0} = 0\,. \tag{3.127}$$

This resonance in the correlation function is nevertheless integrable, as the numerators simultaneously tend to zero. Under certain conditions for low dust temperatures, the soft mode resonance can provide the major contribution to the correlation function. In g^l, this condition corresponds to $x = 0$ and $W(x) = 1$, and thus

$$\alpha(\bar{k}_{\rm cr}) + \beta(\bar{k}_{\rm cr})\,\frac{\bar{k}_{\rm cr}^2}{\tau_{\rm d}^2\bar{k}_{\rm cr}^2 + (\pi/4)\eta_{\rm r} - \eta_{\rm b} - \eta_{\rm c}} = 0\,. \tag{3.128}$$

It is important that the presence of zeros in the denominator of the integrand of the correlation function, gives a periodic dependence of the distances, or, in other words, the distant correlations. Mention should be made that in closed systems, Eqn (3.127) has no solutions. Therefore, the presence of such solutions is a property of open systems. In addition, function $W(x)$ always has an imaginary part, except at the point $x = 0$, and thus the resonance of the soft mode is always made regular for finite dust temperature.

It is possible to find an analytical expression for g^l, assuming that the resonance related to the soft mode gives the major contribution to g^l. For this purpose, we will decompose the denominator of g^l into small parameters $\bar{k} - \bar{k}_{\rm cr}$ and x^2, substituting in all of the coefficients of this decomposition, except $\sin(\bar{k}\rho)$, the value of $\bar{k}$ equal to its value in the resonance, $\bar{k} = \bar{k}_{\rm cr}$:

$$g^l = -\frac{\zeta}{\rho}\int_0^\infty \sin\bar{k}\rho \int_0^{x_{\max}} {\rm d}x\,\frac{\bar{k} - \bar{k}_{\rm cr} - 2\gamma x^2}{(\bar{k} - \bar{k}_{\rm cr} - 2\gamma x^2)^2 + \pi\gamma^2 x^2}\,, \tag{3.129}$$

where

$$\zeta = \frac{4\pi a^5}{d_{\rm i}^8\tau_{\rm d}^2}\,N(\bar{k}_{\rm cr})\bar{k}_{\rm cr} \times \left\{\frac{\partial}{\partial\bar{k}}\left[\alpha(\bar{k}) + \beta(\bar{k})\,\frac{\bar{k}^2}{\tau_{\rm d}^2\bar{k}^2 + (\pi/4)\bar{k}\eta_{\rm r} - \eta_{\rm b} - \eta_{\rm c}}\right]\right\}^{-1}_{\bar{k}=\bar{k}_{\rm cr}}\,, \tag{3.130}$$

$$\gamma = \left\{\frac{\alpha(\bar{k})\tau_{\rm d}^2\bar{k}^2}{\tau_{\rm d}^2\bar{k}^2 + (\pi/4)\bar{k}\eta_{\rm r} - \eta_{\rm b} - \eta_{\rm c}} \times \left[\frac{\partial}{\partial\bar{k}}\left(\alpha(\bar{k}) + \beta(\bar{k})\,\frac{\bar{k}^2}{\tau_{\rm d}^2\bar{k}^2 + (\pi/4)\bar{k}\eta_{\rm r} - \eta_{\rm b} - \eta_{\rm c}}\right)\right]^{-1}\right\}_{\bar{k}=\bar{k}_{\rm cr}}\,. \tag{3.131}$$

An approximate dependence of the correlation function, g^l, on distance, can be found for $\tau_d \ll 1$, when $1/\gamma \gg 1$, and, therefore, for $\rho \sim 1$, it is possible to use the inequality $\rho \ll 1/\gamma$ to find an approximate analytical expression for the dependence of the correlation function on distance. We find:

$$g^l(r) \approx \frac{\zeta\pi}{8\sqrt{\gamma}\rho^{3/2}}\sin\left[\left(\bar{k}_{\rm cr} - \frac{\pi}{4}\right)\rho\right] + \frac{\zeta\pi}{8\sqrt{\gamma}\rho^{3/2}}\cos\left[\left(\bar{k}_{\rm cr} - \frac{\pi}{4}\right)\rho\right]\frac{2}{\pi}\left(0.577 + \ln\frac{8}{\pi\gamma\rho}\right). \tag{3.132}$$

This result is obtained for $\tau_{\rm d} \ll 1$, where the resonance of the soft mode exists; in this case, as can be seen from Eqn (3.132), we have $g^l \propto 1/\sqrt{\gamma} \propto 1/\tau_{\rm d}$, but ζ has the same order of magnitude as the coefficient in front of that part of the correlation function which describes the molecular potential curve, namely $g^{\rm m}$. The correlation function, g^l, as can be seen from Eqn (3.132), describes the long range order with maxima and minima decreasing in amplitude with distance. Thus, the correlations over large distances become dominant for $\tau_{\rm d} \ll 1$.

We cannot speak here of the formation of crystal structures, as all of the results were obtained with the use of perturbation theory. To use perturbation theory, it is necessary that the amplitude of the dust particle oscillations appearing due to the action of the forces, F (including the new forces of attraction and repulsion), equal to $F/v_{\rm d}\omega$, be much less than the 'phase' velocity, ω/k, determined by the characteristic frequency, and characteristic wave number, in the Fourier decomposition of the correlation function (it is easy to find that, in the case considered, $\omega/k \gg v_{T\rm d}$). This criterion for the new attraction forces is converted to $\delta n_{\rm d}/N_{\rm d} \ll 1$, which means that the dust density fluctuations should be small. This appears to be a natural restriction for weak correlations.

For the formation of a dust crystal, it is necessary that the fluctuation of the dust density be at least of the order of unity. In any case, it is difficult to see that the interaction energy should be several orders of magnitude larger than the kinetic energy to form the crystal, as is the case for ordinary crystals. This conclusion is obviously a preliminary one. This consideration may easily be altered to consider the presence of attraction due to neutrals, but this effect is small in the present experiments.

4. Comments on the formulation of future topics concerning plasma-dust structures

4.1 How to formulate future topics

Above, we described the observations and experiments, and the first theoretical steps towards understanding them. Apparently dust structures may, in the future, be an important 'testing field' for the investigation of self-organization processes, mainly because of the simple way in which the equilibrium states can be formed, and because of their high rate of dissipation. The rate of dissipation indicates an ability for self-organization, but apart from the high rate of dissipation, it is also necessary for sufficient sources of particles and energy to be present, to compensate for the dissipation, and to form the stationary dissipative self-organized structures.

The experiments discussed above prove that such quasi-equilibrium, stationary, self-organized structures can indeed be formed. The presence of 'food' for these structures can provide for their long existence. For these reasons, the formulation of physical descriptions of the structures already created should first be directed towards an investigation of the aspects which make dissipative structures different from other structures, determining the minimum free energy, as in normal crystals or liquids — 'living' structures are much more variable then 'dead' structures.

Having this in mind, the structures already obtained experimentally should be investigated in more detail, and the non-standard properties should be analysed. This will

need a lot of work, with use of complicated geometries and distributions of ionization rates and electric fields. The new mechanism due to the openness of a system can be checked using just a few dust particles in a system. Special emphasis should be made in the investigation of the nonlinearities in such a system, since they are the essential elements of any dissipative structures.

The instabilities of self-contraction are only the first stages of collapse of a dust cloud, which can be described using a linear approach. The collapse leads, finally, to the formation of nonlinear structures. The nonlinearities appear both in the plasma component and in the dust component; the openness of a system, and the nonlinearities associated dust charging will substantially change the previously known plasma nonlinearities. All of these processes were, in the past, not accounted for. It seems to us that already at the present time our knowledge is sufficient to formulate such problems for future experiments, as well as new theoretical problems.

In this connection, it seems impossible, in this review, to miss the old problem of ball lightning, for which, according to the most probable hypotheses, dust and neutrals play the exclusive role. Here we will be able to give only preliminary estimates concerning the possible role of the new concepts on dust interaction in open systems, and to find out what kind of additional effects they can contribute to the models already in existence.

It is also impossible to miss the old problem of star formation in interstellar dust-molecular clouds, for which, according to present belief, an important role is played by the gravitational attraction of dust and neutral molecules. We will try to give some preliminary estimates of the impact of new mechanisms of attraction, for self-contraction and fragmentation in dust-molecular clouds. It is interesting to note that, at first glance, such different effects as ball lightning and star formation have common physical grounds.

4.2 Future topics associated with the theory of plasma-dust crystals

As was mentioned, the appearance of distant order in dusty plasma indicates that a phase transition to the plasma-dust crystal state can occur more simply than in ordinary matter, and probably does not require strong correlations. Up to the present time, these arguments are only preliminary. The weak correlations were described for $d_i^2/a \gg a$ and thus it is natural to suppose that the lattice constant will be of the same order, $d_i^2/a \gg a$. The numerical simulations indicate that this is the case for the parameters used in simulations. By extrapolating the results given above, up to the correlations of the order of unity, it is possible to suppose that, in the plasma-dust system, they can exist in at least four states.

The condition , in a dusty plasma, for it to be improbable for dust molecules to form, is $T_d \gg U_m$, where U_m is of the order of the dust molecule binding energy:

$$U_m \approx \frac{T_e^2}{T_i} Z_d \frac{a^4}{d_i^4} . \tag{4.1}$$

This relation can be written using the expression for the dimensionless dust temperature, τ_d, introduced above:

$$\tau_d \gg \frac{1}{\tau} \sqrt{\frac{P}{1+P}} \frac{a^2}{d_i^2} . \tag{4.2}$$

This state can be considered to be a gaseous plasma-dust state. For the inequality opposite to relation (4.2), the state can be considered as a molecular dust state. This is the second possible state, corresponding to $\tau_d \gg 1$, when the molecular correlations dominate. This state exists for

$$\tau \ll \frac{a^2}{d_i^2} \sqrt{\frac{P}{1+P}} . \tag{4.3}$$

For

$$\frac{a}{d_i} \ll \tau_d \ll 1 , \tag{4.4}$$

long range correlations dominate but are still weak. This is the third state. Finally, the fourth state corresponds to the case where the correlations are strong (or of middle strength), and this state corresponds to the fulfillment of the inequality:

$$\tau_d \ll \frac{a}{d_i} . \tag{4.5}$$

In all cases, the presence of a small parameter a/d_i, which is absent in purely Coulomb systems, is important. All estimates made are obviously preliminary, but there exists a hope that the theory of dust crystals can be much simpler than the theory of ordinary crystals, due to presence of new, small parameters.

The theory of plasma-dust crystals, and the phase transitions which lead to their formation, is waiting to be formulated. The existing approaches represent only the first step in this direction. On the other hand, it is very dangerous that these investigations may be based on the theory of strong correlations in Coulomb systems alone. Of course, the construction of such a proper theory will require much effort, but the arguments given above show that a necessary element of such theory should be a new physics, due to the openness of the system — relating this openness to the presence of new attractive forces. The creation of such a theory is, nevertheless, a more simple task than to improperly formulate a theory of strongly correlated systems, at the present time.

In the problems of self-organization, a variational principle is often used [72, 73] which, in a dissipative system, corresponds to the minimum of one of the conserved values (without dissipation) with the preservation of the other conserved value (without dissipation: the first of them is more dissipative than the other). Many examples of this kind are given in Ref. [72]. In Ref. [73] a variational principle is used, for the minimum of energy with the conservation of current, and for the explanation of the self-organization in tokamaks. The question is, 'what kind of variational principle can one propose for self-organization in a dusty plasma, and for the formation of plasma-dust crystals?'

In Ref. [57] it was shown that, when the distance between two dust particles in a plasma decreases, the charge on each dust particle decreases such that the electrostatic energy related to the charges on dust particles decreases. This occurs due to, and together with, the constancy of the potentials on the surface of two interacting dust particles, as the latter, being floating potentials, are determined by the electron temperature. One can probably formulate a variational principle for self-organization in a dusty plasma in the form of the minimum of electrostatic energy for constancy of surface potential on each dust particle.

4.3 About plasma-dust crystals with free boundaries

The numerical simulations [1], where criteria $\Gamma > 170$ was obtained for strongly correlated systems, was performed with periodic boundary conditions and cannot answer the question of whether crystals with free boundaries really exist. But from our experience, we know that they exist for ordinary matter. For plasma-dust crystals, this question of existence with free boundaries should be repeated. The presence of dust attraction opens this possibility.

The numerical simulations performed in Ref. [70], using the attractive dust forces described above, indicate that dust-crystals with free boundaries do indeed exist — an random dust distribution forms a plasma-dust crystal with spherical shape, with spacing between the dust particles of the order of dust-molecule size. But these results represent only the first attempts to solve the problem.

The numerical experiments, at the present time, can be made only with 10^3 dust particles, larger numbers of dust particles requiring longer computer times. The final results should depend on the relationship between the size of the crystal and the mean free path of the dust particles, in the case where the plasma is continuously injected from the periphery, as was performed in Ref. [70]. In Ref. [70], the size of the crystal is much smaller than the plasma particle mean free path.

It is necessary to analyze the case of volume injection of plasma particles. The results should depend on the relationship between the size of the crystal and the thickness of the double layer, which is usually of the order of $(5-7)d$. The plasma crystal as a whole, will be charged in the case of plasma injection from the periphery, and will not allow the electrons to penetrate and screen the dust particles inside from the electron fluxes, and the charging of dust. All of these problems are waiting to be investigated, taking into account the new attraction forces.

In the existent experiments, the plasma-dust crystals obtained do not have free boundaries as the lower crystal layers are positioned within the upper part of the double layers, which appear close to the lower electrode. In this case the horizontal confinement is produced by the shape of the HF field potential.

It is possible to form plasma-dust crystals within free boundaries under conditions of micro-gravity. Only these experiments will be able to check the predictions of the theory for plasma-dust crystals within free boundaries, based on the new types of dust attraction, described above.

4.4 About dust particle agglomeration

The phenomenon of growth and agglomeration of dust particles in plasmas is well established experimentally, but poorly understood physically. In many technologies it is desirable to be rid of this process, or at least to lower its rate. It is therefore important to understand how the process of agglomeration can proceed when large charges are present on dust particles, which obviously lead to their repulsion.

To correctly formulate the problem of agglomeration it is necessary to analyse all possible mechanisms for dust attraction. Earlier, we considered these mechanisms mainly for distances larger than the Debye radius. The electrostatic attractive forces between dust particles indeed work effectively only at such distances, but the attractive forces due to neutral bombardment also work at distances less than the Debye radius, where the electrostatic forces are always repulsive.

Above we compared attractive forces due to neutral bombardment, with electrostatic forces for distances larger than the Debye radius. This comparison is important for experiments on plasma-dust crystals, where the inter-dust distance is much larger than the Debye radius, and where the electrostatic attraction contains the factor $(T_e/T_i)^{3/2}$, which increases the attraction as $T_e/T_i \approx 10^2$.

In plasma etching experiments, agglomeration is observed when the average distance between dust particles is less than the Debye radius, such that the attractive forces due to neutral bombardment can be compared with the electrostatic repulsion of the non-screened Coulomb electrostatic potential. Mention should be made that all expressions for the forces of attraction and repulsion are valid both for distances larger than the Debye radius, and in the opposite limit (the Coulomb repulsion is taken into account in the dispersion relation by the usual dust plasma term in the dust dielectric constant, ω_{pd}^2/Ω^2).

The forces given above for attraction by neutral bombardment, are also correct in the limit where the distance between dust particles is less than the Debye radius (in fact, for these forces, the Debye radius plays no role). We will show that attraction by neutrals is, relatively, more important in the case where the distance between the dust particles is less than the Debye radius. In this case, when both the attractive forces due to bombardment by neutrals, and due to electrostatic repulsion, have the same dependence on distance (potentials are proportional to $1/r^2$), and if the attraction is larger than the repulsion for a certain radius less than the Debye radius, it will be larger at any smaller distance, down to that which corresponds to the distance where the dust particles touch each other (for small distances the dipole interaction also becomes important).

The criteria for the domination of attraction forces at distances less than the Debye radius can easily be obtained by comparing the Coulomb potential with that due to neutral bombardment [see Eqns (3.46), (3.47)]:

$$\frac{n_n}{n_i} > 8z^2\,\frac{d_i^2}{a^2}\left(\frac{T_e^2}{T_i T_n}\right). \tag{4.6}$$

Although this formula is written in the form in which the parameter d_i/a enters, it is valid both for $d_i/a \ll 1$, and for $d_i/a \gg 1$ (also, the electrostatic force, the repulsive force, and the attractive force by neutral bombardment do not depend on d_i). For $d_i/a \approx 1$, the attraction will dominate with the degree of ionization $n_n/n_i > 3\times 10^5$ if $z \approx 2$.

In etching experiments, $n_n/n_i \approx 10^6$, and the criterion for agglomeration is fulfilled. In fact, criterion (4.6) does not depend on a. This can be seen from $z = Z_d e^2/aT_e$. However, in this case the result will depend on Z_d. The question is whether, for such large dust densities as those observed in experiments, $n_d \approx (10^9 - 10^8)\ \mathrm{cm}^{-3}$, one can use the OML approach, which gives $z \approx 3$?

It is possible that, for large dust densities, there will be insufficient numbers of electrons present to charge the dust particles to the value predicted by the OML approach (the electron density depletion, in the presence of high dust densities, was observed experimentally). In this case, z in Eqn (4.6) may be much less than that for isolated charges.

It should be mentioned here that agglomeration usually appears, and that ionization instability is possible, in volume ionization, and it is surprising that criteria (4.6) was not written before. The only hypotheses existing earlier for the

explanation of the observed agglomeration was that, for some unknown reasons, the charge on dust particles is small, and due to fluctuations, there could exist particles with both signs of charges attracting each other to produce agglomeration. To stretch the data, and to assume that the charge on dust particles is so small, is very difficult. The neutrals allow for the agglomeration, even for rather large dust charges, and this hypothesis seems to be much more realistic. Answers for this problem can be given mainly experimentally.

Another important point to be discussed is the relationship between the dust surface temperature and the temperature of neutrals. Only in the case that the neutral temperature is lower than the dust surface temperature, bombardment forces from neutrals are attractive forces between dust particles. A natural mechanism for the cooling of dust surfaces is by radiation losses, which according to a well known relation, could be of the order of σT^4 per 1 cm^2 of the dust's surface, where σ is the Stefan – Boltzman constant.

The heating of the dust surface is produced by the flux of neutrals, supposing that the ion and electron energy fluxes are much less, due to the low degree of ionization. The neutral energy flux is of the order of $n_{\mathrm{n}} v_{T\mathrm{n}} T_{\mathrm{n}}$. For the cooling of a dust particle's surface, it is necessary that

$$n_{\mathrm{n}} v_{T\mathrm{n}} T_{\mathrm{n}} < \sigma T_{\mathrm{ds}}^4 < \sigma T_{\mathrm{n}} \,. \tag{4.7}$$

The last inequality in expression (4.7) follows from the condition of dust attraction, $T_{\mathrm{ds}} < T_{\mathrm{n}}$. Condition (4.7) can be written in a form useful for practical applications,

$$n_{\mathrm{n},15} < 18\sqrt{A}\, T_{\mathrm{n},273}^{5/2} \,, \tag{4.8}$$

where $n_{n,15}$ is the neutral density in units 10^{15} cm^{-3}, and $T_{\mathrm{n},273}$ is the neutral temperature in celsius degrees, in units of room temperature, 273 K. In standard etching experiments, $n_{\mathrm{n},15} \approx 1$ and $T_{\mathrm{n},273} \approx 1$, such that condition (4.8) is fulfilled and the neutral bombardment force represents an attractive force. This makes it possible to formulate, in physical terms, the problem of dust agglomeration as the domination of attraction due to neutral bombardment, over the Coulomb charge repulsion.

4.5 New possibilities and estimates for the explanation of the ball lightning phenomenon

The phenomenon of ball lightning has more theories and hypotheses than actual physical observations. The results given above contain new physical concepts which where not previously applied to this subject. Therefore, we cannot miss the opportunity to devise preliminary estimate concerning this problem, with the new theories in mind.

An obvious question is whether the conditions to form a spherical self-organized dust structure at atmospheric pressure in the air as a gas exist. It is also desirable to concoct only the simplest, natural hypotheses, not employing any extraordinary assumptions. We will, for this purpose, make use of the enormous work already performed, by discussing some of the most probable explanations already made [71].

We do not insist that the estimates given below represent the best use of the recent developments in dusty plasmas, giving them only as an example of such use. We are simply providing additional estimates to those already given in Ref. [71], as at the time review [71] was written, these new developments were unknown.

To be explained are:

(1) The extended duration of the phenomenon, and thus, the source of energy;

(2) The spherical form, and thus, the presence of surface tension;

(3) The electrical activity, and the difference between the total energy and that related to the electrical activity.

It is presently accepted as the most probable hypothesis, that dust is the most important component in the phenomenon [71]. The presence of dust in the air during the preconditions of ball lightning is a well established fact. Light created by ball lightning, without a doubt, indicates the presence of plasma (likely inhomogeneous, in the form of hot points [71]), the average plasma density of which is estimated in [71] to be 10^{12} cm^{-3}. The neutral density is 2×10^{19} cm^{-3}, which implies that the degree of ionization is extremely low, 0.5×10^{-7}.

Dust can accumulate electrostatic energy, as was discussed above. But is it sufficient for this phenomenon? Another problem is that the recombination of plasma on dust is a rather fast phenomenon, as was shown above. In any explanation using charged dust, one needs either to find the source of ionization sustaining the charge, or to explain why the recombination on dust is not as fast as expected. The problem due to recombination has always been one of the largest in the attempts to relate the energy of ball lightning, either to dust energy, or to plasma energy (see Ref. [71]). However, as was mentioned, the presence of plasma is an established fact.

In Ref. [71], a hypothesis was developed in detail in which ball lightning was considered to be a collection, aero gel, formed from fractal dust in the form of compactly packed linear dust structures of nanometer width — the size of dust particles, i.e., of the order of 10^{-7} cm. According to Ref. [71], this structure constitutes a very porous skeleton which fills the entire volume of the ball lightning.

Energy is taken from the regrouping of the dust-packs within the skeleton — a molecular binding energy. This model, as it has become well developed, contains some aspects which do not satisfy the requirement of simplicity made above, although there are obviously no serious objections to the model.

The first point which appears unsatisfactory is the attempt to explain the surface tension, where the direct estimate, as shown in Ref. [71], gives a value much less than that needed to justify the observations related to the spherical form of ball lightning. Review [71] devised a rather complex process of reconnections, between the ends of the fractal units of the porous dust structure, to explain the surface tension in ball lightning. The idea of dust is so simple that it became desirable to keep it in future models. One important point is that in air, there are always dust particles, and the size of the dust particles which are suspended is of the order of, or less than, a micron.

With that in mind, let us mention the second unsatisfactory point of Ref. [71]. Namely that, in Ref. [71], only dust particles of size 10^{-7} cm are supposed to be present in the spherical dust structure referred to as ball lightning. One can ask the questions 'where do the particles of size larger than a nanometer go?' and 'what complex process occurs to separate the particles of different sizes?' A more natural assumption is that in ball lightning, all dust particles with sizes less than one micron are present.

Despite the above criticisms, we can demonstrate how certain theories, different from those used in Ref. [71], also lead in a natural way to dust sizes of the order of nanometers; and we will also be able to identify which assumptions should

be excluded to make the presence of sizes smaller than microns possible. Let us show, forgetting the problems due to recombination, that in the case one assumes all energy in ball lightning to be the electrostatic energy of dust particles, one gets an estimated size of dust particles to be of the order of nanometers.

A floating condition for ball lightning leads to $n_d m_d < n_n m_n$, and, assuming that the total energy of ball lightning is of the order of the electrostatic dust energy, we have

$$Z_d^2 e^2 \frac{n_d}{a} \approx 2 Z_d T_e n_d \approx 3 \times 10^{17} \text{ erg}$$

for a total energy of 10 kJ [71]. As $Z_d \approx 3 \times 10^7 a$ and $T_e \approx 1$ eV, we find, from the two written relations, that $a < 2 \times 10^{-7}$ cm, which is close to the value used in Ref. [71]. For such a size similarly with Ref. [71], the dust density must be extremely large so as not to violate the condition $n_d m_d < n_n m_n$) — about 10^{15} cm^{-3}, with a relatively low charge on each dust particle, of the order of $Z_d \approx 3 - 10$.

Approximately the same number of dust particles are assumed in Ref. [71], but they are knitted into the skeletal form described earlier. This model is not extremely elegant, as one should explain how such a large dust density is initially formed. Mention should be made that, for the given plasma density and temperature, the Debye radius is of the order of 10^{-4} cm, and the mean inter-dust distance is 0.6×10^{-5} cm, i.e., it is much less than the Debye radius. Bombardment by neutrals can lead to the agglomeration of dust, but the dust density will then decrease rapidly and substantially. The formation of a skeleton can probably be considered a result of agglomeration, which prevents further agglomeration, though the initially large dust density remains unexplained.

We can retain the dust hypotheses, but the flexibility in the parameters only remains if we suppose that the main energy is not the electrostatic energy of the dust. In Ref. [71], it is also not the electrostatic energy, but the chemical energy in the formation of the skeleton. A chemical reaction energy is assumed in another model [72].

In another sense, the accumulated energy cannot be the plasma energy as it is of the order of the electrostatic dust energy. The plasma energy can be estimated,

$$4\pi R^3 \frac{n_e T_e}{3} \approx 3 \times 10^4 \text{ cm}^3 \times 10^{12} \text{ cm}^{-3} \times 1.6 \times 10^{-12} \text{ erg} \approx \frac{1}{200} \text{ J},$$

while the average ball lightning energy is 10 kJ [71].

The simplest assumption regarding dust in ball lightning is that there exists a broad distribution in particle sizes, with a maximum size determined by the flotation of dust within air (with the existence of small air flows), i.e., of the order of a micron. Another natural assumption is that the total charge on the dust particles is not larger than the total electron charge, i.e., $n_d Z_d \approx n_e$. For size $a \approx 0.3 \times 10^{-4}$ cm we have $Z_d \approx 10^3$, we have $n_d \approx 10^9$ cm^{-3}. Then, $n_d m_d \approx (1/3) 10^{-3}$ g cm^{-3}, which is less than, but close to, the air density, and the levitation of a dust ball is possible.

Let us assume that the energy is associated with kinetic dust energy, moving in a turbulent ultrasound field with a velocity close to the sound velocity. Above, it was shown that sound waves in the presence of dust can change their velocity by being loaded by dust. We will suppose that such loading exist (which obviously should be the case for levitation conditions), but that it changes the sound velocity by less than an order of magnitude (for the estimate given above $n_d m_d \approx (1/3) n_n m_n$). In this case, the energy of a dust ball will be $n_d m_d v_s^2 4\pi R^3/6 \approx 30$ kJ, which requires justification. One should bear in mind that v_s is the maximum turbulent velocity, and that the average observed energy of ball lightning is 7 kJ. Thus, from the energy point of view, this assumption can be accepted.

Another question then is whether sound turbulence can produce random dust velocities of the order of the speed of sound. First of all, the dust should be driven by neutrals in the case where the frequency of sound waves is less that of the dust neutral collision frequency. Then, any air motions (mainly the motions of neutrals) can be transferred to dust particles; i.e., any mechanical energy can support the dust cloud. This is favorable as there are many indications that air motions can provide additional sources of energy in the development of ball lightning. The energy accumulated can be in the form of sound waves which can be fed by external sound waves. This energy should be, at least, used for electron heating, followed by ionization. Thus, the problem of energy support is transferred to the problem of electron heating, and ionization by heated electrons. We can pinpoint two mechanisms of heating — by absorption of sound waves, and by Fermi acceleration. It is easy to show that the latter mechanism is not extremely effective.

The dust particles with large charges, which reflect most of the electrons, are ideal objects for Fermi electron acceleration. The fast electrons have large cross-sections of ionization and produce secondary electrons which, in principle, are able to support the charge on the dust particles. Energy in this process is obviously taken from the dust charge, but the problem is: how important can the delay be in recombination of plasma particles on the dust particles? The well known formula for Fermi acceleration can be written for the average electron energy, T_e:

$$\frac{1}{T_e} \frac{dT_e}{dt} \approx \frac{u^2}{v_{Te} L} . \tag{4.9}$$

In the case that one substitutes into this expression the average inter-dust distance, $[(3/4)\pi n_d]^{1/3}$, instead of L, one obtains, for the temperature, $T_e \approx 1$ eV and $u \approx 1$ cm s^{-1}, a rather long heating time, 3×10^4 cm s^{-1}, which directly suggests that this mechanism is not effective.

In the case that hydrodynamic turbulent motions exist, and that the dust is driven by them, the frequency of turbulent motions should be less than the collision frequency of momentum transfer from neutrals to dust, $\nu_n \approx n_d v_{Tn} \pi a^2$. Up to these frequencies, the sound turbulence will drive the dust. The velocity of dust in strong sound turbulence, considered as a collection of weak shock waves, will be of the order of the sound velocity, and $u^2 \approx v_s^2$. Also, one should assume that $L \approx v_s/\nu_n$. Then,

$$\frac{1}{T_e} \frac{dT_e}{dt} \approx \frac{v_s}{v_{Te}} \nu_n \tag{4.10}$$

and for the parameters given above, $\nu_n \approx 3 \times 10^5$, which, according to Eqn (3.129), gives for the rate of heating, $\approx 2 \times 10^3$ s^{-1}. The heated electrons will produce a thermal ionization which should be comparable with the recombination rate. The recombination of free electrons and ions at atmospheric pressure occurs in 10^{-3} s [50]. Other recombination also occurs on dust particles.

The distance between the dust particles is of the order of 10^{-3} cm, which is larger than the mean free path of ions 10^{-4} cm. The reduction in the recombination rate will be only 10 times, but the characteristic time of dust charge decrease, determined by the relation being increased, 10, will nevertheless be less than 0.3×10^{-5} s, which means the there is an absent factor of about 300 for this effect to be considered appreciable.

Let us consider another possibility for heating by sound waves. For wavelengths of the order of 1 cm, the characteristic time for diffusive heating of electrons is $v_s/v_{Te}10^4 < 10^{-6}$ s, which is rather fast.

A third mechanism for heating can be an energy gain due to the self-contraction of the dust cloud. For the accepted parameters, attraction by neutrals is not very effective, though other assumptions, however, may make them effective. Relation (4.8) is probably not fulfilled, and the neutral bombardment leads to an additional repulsion. Thus, at distances less than the Debye radius, all forces are repulsive, dominated by the Coulomb repulsion, according to inequality (4.6). The rate of energy increase due to self-contraction is therefore determined by the change of dust-molecular energy,

$$U_m \frac{n_d}{n_e} \frac{d(\ln R)}{dt} \approx 10^3 \frac{d(\ln R)}{dt} .$$

For $d \ln R/dt \approx 1$, this rate of heating is not sufficiently large.

The surface tension is estimated to be 30 erg cm^{-2} for a reasonable surface thickness of 0.3 cm. Note that, for the existence of a ball-like structure, it is not necessary that the attraction forces work only in the surface layer, as even in the case where the attractive forces work throughout the whole volume, a ball structure is created (as it is, for example, in stellar generation). It is only necessary that the thickness of the layer, where the attraction is effective, be less than the ball radius, which is indeed the case — even in the case where the attraction is an order of magnitude less, a ball-like dust structure should appear. Therefore, although attraction can be used to explain the ball shape of the lightning, the self-contraction cannot be considered a source of energy.

The only energy left then, is the energy received from mechanical sound oscillations, trapped within the ball lightning, either originally, or continuously trapped over time. Such a trapping of ultrasonic oscillations is not only possible, but should occur readily. There exist all of the necessary conditions for such trapping, as the sound velocity inside the volume of ball lightning should be less than outside it, if $n_d m_d \approx n_n m_n$, which was the starting point of this consideration. The trapping of sound waves is a natural and well known effect, referred to in optics as 'total inner reflection'. This effect appears only for frequencies less than the collision frequency of neutrals with dust. This gives the estimate, $\nu_n \approx n_d v_{Tn} \pi a^2 \approx 3 \times 10^5$ s. This frequency corresponds to the ultrasonic branch of sound oscillations, the presence of which is rather probable.

For the existence of a self-organized ball-like structure, we should expect this structure to be contained within an intense field of ultrasound waves, which feed it with energy that finally is dissipated on the dust. We can estimate the total dissipation rate from $4\pi R^3 \psi_E n_d/3$, where ψ_E is the energy dissipated on a single dust particle, given by relation (3.14).

The dissipated energy will be equal, either to the initially trapped kinetic dust energy in the field of trapped ultrasonic waves, or to the energy of the external flux of sound waves on the surface of the ball lightning. According to the accepted numbers, we find that the energy dissipated on the dust is equal to ≈ 3 kJ s^{-1}, i.e., if, as it was estimated, the captured energy is 10 kJ, the time for the existence of the dust ball will be 3 s, which roughly corresponds to the times observed.

By equalizing the dissipated energy to the flux of sound waves, assuming that the ball-like dust structure is in an external ultrasonic field, we find the amplitude of the sound wave which are able to support the quasi-stationary existence of such a structure, is $\underset{\sim}{v}^2/v_s^2 \approx 10^{-3}$, where $\underset{\sim}{v}$ is the velocity of neutral oscillation in the field of the sound waves. This estimate shows that, in this case, the amplitude is sufficiently small. The existence of this additional source of energy for ball lightning is in accordance with many observations (see Ref. [71]).

We are also able to estimate the size of the dust ball structure by dividing the frequency of the ultrasonic waves, $\nu = \nu_n \approx 3 \times 10^5$ s^{-1}, by the sound velocity, 3×10^4 cm s^{-1}. This gives a size of $10cm$, roughly the order of that usually observed.

Within the structure, the pressure of neutrals, $n_n T_n \approx 3 \times 10^5$ erg cm^{-3}, should be compensated by the energy density due to self-contraction, $n_d T_e^3 Z_d a^4/(T_i^2 d_i^4) \approx 10^5$ erg cm^{-3}, which is indeed the case, having in mind the strong dependence of the last value on the value of the parameters. We can estimate the growth rate of self-contraction as

$$\gamma \approx 2\omega_{pd} \frac{a}{d_i} \sqrt{\frac{T_e}{T_i}} \approx 3 \times 10^5 \text{ s}^{-1} ,$$

which corresponds to, within an order of magnitude, the frequencies used. The distance between the dust particle is estimated to be 10^{-3} cm, which is $3d_i/a$ larger than the Debye radius, corresponding to a size somewhat larger than the size of the dust molecules (which should be the case when the attraction is really working).

From these rough estimates, it is evident that natural assumptions do lead to a reasonable model. Dust of the sizes considered are usually present, and the presence of ultrasound waves is also probable. These estimates, however, represent only a possible solution to the problem. It is more important that new possibilities are opening, due to a deeper understanding of plasma-dust structures. The latter will certainly rapidly increase in the future.

4.6 About planetary rings as plasma-dust self-organized structures

It is usually assumed that the self-organization in Saturn's inner rings is determined by gravitational effects, and by dissipative processes related to the collisions of large porous particles moving in Keplerian gravitational orbits. There is reason to believe, according to the arguments given above, that the self-organization in the Saturn's outer rings, where the maximum size of dust particles is of the order of microns, is determined by plasma processes. However, an explanation should also be given for why in the inner rings, also containing small dust particles, the plasma dissipation substantially exceeds the dissipation due to gravity regulated collisions.

Mention should be made that, for planetary rings, dissipation on dust particles may be compensated by thermal plasma fluxes perpendicular to the planes of the rings. By using relation (3.14) and the observed dust density in the inner

Saturn rings, $n_{\rm d}(a) \approx 10^{-3}/(a\ [{\rm cm}])^3\ {\rm cm}^{-4}$, and using the estimate of the thermal plasma flux in the form $n_{\rm i} T v_{T{\rm i}}$, we find, for the thickness of the rings, a value close to several meters, which is very close to the thickness observed.

The gravitational forces determine more, the particle movement in the plane of the rings. For a particle size distribution of the form $\propto 1/a^3$, the density of dust particles is determined by the smallest size, the mass is determined by the largest size, and the plasma dissipation is determined almost equally by particles of all sizes. Although the ratio of the inter-dust distance and the Debye radius is different for inner and outer rings, the self-contraction instability can develop for any relation between the inter-dust distance and the Debye radius.

Up to the present time, only electrostatic forces of repulsion have been considered as mechanisms determining the distribution of dust particles in the direction perpendicular to the ring plane [33], and only the dust collisions moving in Keplerian orbits have been used for the determination of the dust distribution in the plane of the rings [37]. In the last case [37], a dispersion relation was obtained which takes into account both the dust collisions and self-gravitation.

It is possible, now, to formulate a problem (future topic) concerning the dust distribution in the plane of the ring, and perpendicular to this plane, which takes into account all new attractive forces, plasma processes, and self-gravitation.

Notice that above, we were able to formulate a similar problem in the case where the unperturbed state is homogeneous. In the case we are now interested in, the unperturbed state is inhomogeneous in the direction perpendicular to the ring plane, where all particles have Keplerian velocities.

The distribution in the direction perpendicular to the ring plane is determined by the balance of the gravitational contraction force from the central planet, the electrostatic force, and other forces of repulsion and attraction. Previously, only the electrostatic non-screened forces of repulsion were considered [38, 39].

After a more detailed consideration of the equilibrium state is made, the problem will be to find the dispersion relation for the perturbation of this state, taking into account all plasma dissipative processes. This problem is similar to, but more complicated than, the homogeneous problem solved above, but we can not see any serious difficulty in its formulation, although the solution will probably be found only by using numerical methods. The difference from the previous approaches is that the perturbation develops both in the ring plane, and perpendicular to the ring plane; and the separation between the perturbation which develops only in the plane, or only perpendicular to the plane, will not be possible. The presence of such a relationship between the two motions follows from the fact that the collective forces of attraction and repulsion depend on the perturbation of dust density, which cannot be divided into a perturbation in the plane, and in the direction perpendicular to the plane. In simpler words, the dispersion relation connects the disturbances with wave vectors perpendicular to the plane of the ring, with the disturbances in that plane.

As concerns self-gravitation, one should have in mind that the threshold is substantially lower in the presence of dust-sound. Let us illustrate this idea for disturbances in the plane of the ring. In the presence of differential rotation the dispersion relation is modified (see Ref. [44]). In the case we take for the sound speed, the value for the dust sound speed, and take into account only the self-gravitation, we obtain (see Refs [44, 45]):

$$\omega^2 = k_{\rm r}^2 v_{\rm sd}^2 + \frac{1}{R^3}\,\frac{{\rm d}(R^4\Omega^2)}{{\rm d}r} - 2\pi G n_{\rm d} m_{\rm d} h|k|\,. \tag{4.11}$$

In the last term of (4.11), the appearance of the factor $h|k|/2$ (where h is the thickness of the disk) is due to the fact that the problem is 2D, and that the wavelengths investigated are assumed to have sizes much larger than the thickness of the disk. The first term of Eqn (4.11) contains the radial component of the wave vector $k_{\rm r}$, and the second term of Eqn (4.11) describes the differential rotation, with the angular velocity Ω. The instability is absent if

$$\frac{1}{R^3}\,\frac{{\rm d}(R^4\Omega)}{{\rm d}r} > \frac{\pi G n_{\rm d} m_{\rm d} h}{v_{\rm sd}^2}\,. \tag{4.12}$$

This criterion is much more rigid than the usual one, which contains the ordinary sound velocity which is much larger than the dust sound velocity. In planetary rings, the criterion may be the opposite of Eqn (4.12). In the case where this inequality is fulfilled to within a large safety factor, there will be unstable disturbances in the range

$$\frac{1}{R^3}\,\frac{{\rm d}(R^4\Omega^2)}{{\rm d}r}\,\frac{1}{2\pi G h n_{\rm d} m_{\rm d}} < k < \frac{2\pi G h n_{\rm d} m_{\rm d}}{v_{\rm sd}^2} \tag{4.13}$$

with the maximum growth rate

$$\gamma_{\max} = \frac{\pi G h n_{\rm d} m_{\rm d}}{v_{\rm sd}}\,. \tag{4.14}$$

These relations we present as illustrations of the possible changes due to gravitational effects in the presence of dust, even for disturbances within the plane of the rings. The whole problem is much more complex, as stated above.

4.7 About the processes of stellar formation in interstellar dust-molecular clouds

According to modern concepts [44, 45], the formation of stars occurs mainly in interstellar dust-molecular clouds after compression shock-waves propagate through them, creating the initial density condensations for further gravitational contraction. Let us consider the possible role of dust in this process. One should have an estimate, for the possible dust agglomeration, for the change of the sound velocity due to the presence of dust, for the role of neutral initiated attraction, and for the possible changes in the threshold of self-contraction.

We will formulate here, only basic estimates. First of all, $n_{\rm n}/n_{\rm i} \approx 10^7$ and $T_{\rm e} \approx T_{\rm i}$, such that the average distance between dust particles is much less than the Debye radius; the criterion for agglomeration of dust particles of micron size, $10^7 > 10^{15}$, is certainly not fulfilled; and criterion (4.8), concerning neutral bombardment forces to be attractive ($10^{-11} < 10^{-3}$), is certainly fulfilled. This estimate indicates that the initial homogeneous state for the development of instability really can exist.

The time associated with the development of instability is much longer than the time of momentum exchange between the neutrals and dust. For the threshold of instability, it is possible to use Eqn (3.110), obtaining the maximum growth rate from Eqn (3.107) or (3.110). The dispersion relation, Eqn (3.110), takes into account the

electrostatic and the bombardment forces, but due to $n_n/n_i \approx 10^7 > 8z^2 \approx 32$, the neutral bombardment attraction dominates the electrostatic effects.

The ratio of gravitational attraction to the attraction due to neutral bombardment, is determined by $8\pi G m_d^2/n_n T a^4$, which for micron sized dust particles, is 0.5×10^{-2}. For a dust size distribution of the form $n_d(a) \propto 1/a^3$ in into the ratio given above for the gravitational attraction to the attraction due to neutral bombardment, enters the geometrical average of the minimum and maximum size (i.e., the square root of the product of these values), instead of a, which, in fact, will not change the main conclusion that the neutral bombardment attraction dominates. This fact is not taken into account in the present concepts of star formation. It follows that, according to the presently accepted data, the value $n_d m_d$ is, in the dust-molecular clouds, approximately one order of magnitude larger than $n_n m_n$. This will, according to Eqn (3.110), substantially lower the threshold sizes where the self-contraction can start (by approximately 20 times), and will increase the growth rate by approximately one order of magnitude. On the other hand, the instability due to neutral bombardment is effective at smaller sizes than that due to purely gravitational attraction.

All of these are preliminary estimates, which show that this topic is important and needs to be investigated in more detail.

5. Conclusion

The aim of this review was to point out the very rapid progress made in the past two years towards understanding the physical processes occurring in plasma-dust systems. The estimates above were provided as illustrations, bearing in mind that for the reader, it will be easier to make personal estimates in this rapidly developing field.

Dust structures are the simplest objects in the study of more general, self-organizational problems. The possibility of natural processes of self-organization in space, and the retention of information in space by these structures, is a completely open question, which corresponds to completely new forms of self-organization; but obviously an exciting newly investigated field relating to the natural formation of plasma-dust crystals in cosmic space, is completely open for future investigations.

Space experiments on the growth of plasma-dust crystals under conditions of micro-gravity, will probably be made in the near future. They will help us to understand the nature of the processes of crystallization, and the specific interactions in open systems, as discussed in this review. Future research aimed at the miniaturization of computer schemes, and their production by plasma treatment of surfaces, should become a central topic in the application of the physics of plasma-dust structures.

Acknowledgements. We wish to thank Daniel Law, a Ph.D. student at the University of Oxford, for closely editing English of this paper, and making several contributions — small additions present in the English version most notably the recent results of the Oxford University Group.

The author expresses thanks to Ya Khodataev and V Tarakanov (Institute for High Temperatures, Moscow), G E Morfill (Max Planck Institute for Extraterrestrial Physics, Garching, Germany), R Bingham (Rutherford–Appleton Laboratory, UK), U de Angelis (Napoly University, Italy), and D Resendes (Cetro de Electrodynamics, Lisbon, Portugal) for cooperation in theoretical work.

The author thanks the head of seminars where the theoretical results were presented V L Ginzburg (P N Lebedev Physics Institute, Moscow), A M Prokhorov (Institute of General Physics, Moscow), A P Nefedov (Institute for High Temperatures, Moscow), J Allen (Oxford University, UK), K Larshmore-Davis (Culham Laboratory, UK), Y Winter (Ulich Plasma Laboratory and Bochum University, Germany).

References

1. Ishimaru K *Phys Rep*. **34** 1 (1982)
2. Ichimaru K *Basic Principles of Plasma Physics* (Massachusetts: Beniamin Inc., Reading, 1973)
3. Robbins M O, Kremer K, Grest G S *J. Chem. Phys*. **88** 3286 (1988)
4. Morfill G E "Plasma crystal" Preprint Max Planck Institute for Extraterrestrial Physics (Germany: Garching, 1994)
5. Morfill G E "Physics of colloidal plasmas", in *Proc. XX Int. Conf on Phen. in Ionized Gases, 1994*
6. Thomas H, Morfill G et al. *Phys. Rev. Lett*. **73** 652 (1994)
7. Allen J *Physica Scripta* **45** 497 (1992)
8. Khodataev Ya K et al. *Plasma Physics* **27** 125 (1966)
9. Watanabe Y, Shratani M *Plasma Sources Sci. Technol*. **3** 286 (1994)†
10. Boeuf L P *Phys. Rev. A* **46** 7910, (1992)
11. Chu J H, Lin I *Physica A* **205** 183 (1994)
12. Melzer A, Trottenbery T, Piel A *Phys. Lett. A* **191** 301 (1994)
13. Allen J et al. *Proc. Ann. Plasma Phys. Conf.* (Scotland: Perth, 1996)
14. Thomas H M, Morfill G E *Nature* (London) **379** 806 (1996)
15. Morfill G E *Proc. Ann. Plasma Phys. Conf.* (Scotland: Perth, 1996)
16. Fortov V, Nefedova F *Phys. Let. A* **219** 89 (1996)
17. Selwyn G, Heidenrih J E, Haller K *Appl. Phys. Lett*. **57** 1867 (1990)
18. Selwyn G et al. *J. Vac. Sci. Technol*. **18** 1726 (1990)
19. Bouchoule A et al. *J. Appl. Phys*. **70** 1991 (1991)
20. Praburam G, Goree J *J. Vac. Sci. Technol. A* **12** 3137 (1994)
21. Langmuir I, Found G, Ditter A *Science* **60** 392 (1924)
22. Emeleus K G, Breslin A *Int. J. Electron*. **29** 1 (1970)
23. *Plasma Sources Sci. Technol*. **3** 235 (1994)†
24. Selwyn G S *Plasma Sources Sci. Technol*. **3** 340 (1994)†
25. Garscadden A et al. *Plasma Sources Sci. Technol*. **3** 239 (1994)†
26. Kamata N et al. *Plasma Sources Sci. Technol*. **3** 310 (1994)†
27. Boufendi L, Bouchoule A *Plasma Sources Sci. Technol*. **3** 262 (1994)†
28. Bouchoule A, Boufendi L *Plasma Sources Sci. Technol*. **3** 292 (1994)†
29. Goree J "Charging of particles in plasma" Preprint Univ. Iowa (Iowa: Iowa Univ. Press, 1994)
30. Drane B T, Salpeter E E *Astroph. J*. **231** 77 (1979)
31. Spitzer L *Physical Processes in the Interstellar Medium* (New York: Willey and Sons, 1978)
32. Havnes O, Morfill G E, Goertz C K *J. Geophys. Res*. **89** 10999 (1984)
33. Havnes O, Morfill G E *Adv. Space Res*. **4** 85 (1984)
34. Aslaksen T K, Havnes O *J. Geophys. Res*. **97** 19175 (1992)
35. Melanso F, Havnes O *J. Geophys. Res*. **96** 5837 (1991)
36. Havnes O, Aanesses T K, Melanso F *J. Geoph. Res*. **95** 6581 (1990)
37. Gor'kavyi N N, Fridman A M *Fizika Planetnykh Kolets* (Physics of Planetary Rings) (Moscow: Nauka, 1994)
38. Fridman A M *Dynamics of Astrophysical Discs*. (Cambridge: Cambridge Univ. Press, 1990)
39. Gor'kavyi N N, Fridman A M *Usp. Fiz. Nauk* **160** 169 (1990) [*Sov. Phys. Usp*. **33** 95 (1990)]
40. Brahic A (Ed.) *Planetary Rings* (France, Toulouse: Copadues, 1984)
41. Greenberg R (Ed.) *Planetary Rings* (Tucson, Ariz.: Univ. Ariz. Press, 1984)
42. Kaplan S A *Mezhzvezdnaya Sreda i Proiskhozhdenie Zvezd* (Interstellar Media and Origin of Stars) (Moscow: Znanie, 1977)

† *Proc. of NATO Advanced Research Workshop on Formation, Transport, and Consequences of Particles in Plasmas* (Chateau de Bonas, Castera-Verduzan, France).

43. Pikel'ner S B *Astron. Zh.* **44** 915 (1967) [*Sov. Astron. J.*]
44. Kaplan S A, Pikel'ner S B *Interstellar Medium* (Cambridge. Mass.: Harvard Univ. Press, 1982)
45. Kaplan S A, Pikel'ner S B *Ann. Rev. Astron. Astrophys.* **12** 113 (1974)
46. Pikel'ner S B, Tsytovich V N *Astron. Zh.* **10** 12 (1972)
47. Barnes M S et al. *Phys. Rev. Lett.* **68** 313 (1992)
48. Havnes O *Adv. Space Res.* **13** (10)153 (1993)
49. Wilson G R *J. Geophys. Res.* **93** 12771 (1988)
50. Khodataev Ya K et al. *J. Plasma Phys.* **49** 224 (1996)
51. Tsytovich V N, Havnes O *Comments Plasma Phys. Controlled Fusion* **15** 267 (1993)
52. Tsytovich V N, Khodataev Ya K, Bingham R *Comments Plasma Phys. Controlled. Fusion* **17** 221 (1996)
53. Pitaevsky L P *JETP* **70** 738 (1976) [*Sov. Phys. JETP* **43** 382 (1976)]
54. Bernstein I B, Rabinowitz I N *Phys. Fluids* **2** 112 (1959)
55. Khodataev Ya K et al. *Plasma Physics* **27** 125 (1996)
56. Ignatov A M *Plasma Physics* **27** 323 (1996)
57. Tsytovich V N *Comments Plasma Phys. Controlled Fusion* **15** 349 (1994)
58. Morfill G, Khodataev Ya K, Tsytovich V N *Comments Plasma Phys. Controlled Fusion* **17** 342 1996)
59. Resendes D P, Bingham R, Tsytovich V N *J. Plasma Phys.* **49** 458 (1996)
60. Resendes D, Tsytovich V *Plasma Physics* **27** 34 (1996)
61. Melandso F, Aslaksen T, Havnes O, *Preprint the Auroral Observatory* IMR, N-9037 (Norway: University of Tromso, 1996)
62. Shukla P K, Yu M Y, Bharuthram R *J. Geophys. Res.* **96** 343 (1991)
63. Tsytovich V N, Khodataev Ya K, Bingham R *Comments Plasma Phys. Controlled Fusion* **17** 32 (1996)
64. Tsytovich V N, Morfill G E *Astron. Zh.* **32** 23 (1996)
65. Landau L D, Lifshits E M *Statistical Physics* (Pergamon Press, 1967)
66. Tsytovich V N et al. *Plasma Physics* **27** 24 (1996)
67. Klimontovich Yu L *Statisticheskaya Teoriya Neravnovesnykh Protsessov v Plazme* (Statistical Theory of Nonequilibrium Processes in Plasma) (Moscow: Moscow Un. Press, 1964)
68. Tsytovich V N *Usp. Fiz. Nauk* **159** 335 (1989) [*Sov. Phys. Usp.* **32** 911 (1989)]
69. Tsytovich V N *Lectures on Nonlinear Plasma Kinetics* (Berlin, New York: Springer-Verlag, 1995)
70. Khodataev Ya K et al. *Phys. Rev.* **263** 1652 (1996)
71. Smirnov B M *Phys. Rep.* **224** 151 (1993)
72. Hasegawa A *Adv. Phys.* **34** 1 (1985)
73. Kadomtsev B B *Comments Plasma Phys. Controlled Fusion* **11** 153 (1987), **34** 1931 (1992)
74. Kadomtsev B B *Comments Plasma Phys. Controlled Fusion* **13** 277 (1990)