Physics – Uspekhi **39** (5) 419 – 427 (1996)

ON THE 75TH ANNIVERSARY OF A D SAKHAROV'S BIRTH PACS number: 52.55.Fa

From MTR to ITER

B B Kadomtsev

Contents

Abstract. In 1950, A D Sakharov and I E Tamm put forward the fundamental idea of magnetic thermal confinement of high-temperature plasma, and proposed the magnetic thermonuclear reactor (MTR) concept. Studies in this direction initiated the mammoth 'Tokamak' programme. After many years of persistent scientific and engineering efforts in many countries worldwide, the realisation of the thermonuclear reaction has now become available. The International Thermonuclear Experimental Reactor (ITER) project is currently being developed jointly by the European Community (Euroatom), Russia, USA, and Japan. The aim of the ITER reactor is to demonstrate the scientific and technological feasibility of the peaceful use of nuclear fusion energy. The reactor is based on the Tokamak concept.

1. Introduction

The name of A D Sakharov is associated among physicists primarily with the notion thermonuclear fusion, controlled and uncontrolled. A D Sakharov started reflecting on controlled thermonuclear fusion in 1950, stimulated by O A Lavrent'ev's claim for the confinement of electrons and ions in a dilute plasma by means of static electric fields. He was quick to realise that instead of the electric, the much stronger and more stable magnetic field should be used. Thus conceived the idea of magnetic thermal confinement of high-temperature plasma as a means of obtaining a slow controlled thermonuclear reaction.

The idea received immediate support from I E Tamm, and in 1950 three studies were performed [1, 2] which presented a fairly detailed analysis of the physical aspects of the magnetic thermonuclear reactor (MTR for short). The magnetic field can affect strongly the trajectories of charged particles making them, in a sense, to wind screw-like around its lines of force. If the average Larmor radius ρ_i of an ion is much smaller than the cross-sectional size of the plasma a, a particle must undergo a very large number of Coulomb collisions before reaching the edge of the plasma by diffusion. Therefore at large plasma sizes its confinement may be sufficient for self-sustained thermonuclear reaction to proceed.

In the so-called Big Model [2], the self-sustained D-D (deuterium–deuterium) reaction occurred (in theory) at the following plasma parameters: the minor radius of the toroidal doughnut $a = 2$ m, the major radius $R = 12$ m, the magnetic field induction $B_{\text{T}} = 5$ T. For temperature at the centre of the plasma $T_0 = 100$ keV (billion degrees) and its density $n_0 = 3 \times 10^{20}\ \text{m}^{-3}$, the theoretical power P_{f} was near 1.7 GW in a volume close to 10^3 m^3. It is interesting to note at once that in the ITER a self-sustained reaction is proceeded in about twice as large volume, and this happens not in a deuterium but in a by far more effective deuterium-tritium plasma at approximately 1.5-GW power. Such is the difference between a real plasma and its theoretical Holy Graal. But it took years of painstaking work on many small- and large-scale facilities, to determine the properties of real plasma.

A D Sakharov and I E Tamm understood fairly soon that a simple toroidal field cannot in reality confine plasma because of the toroidal particle drift. They therefore suggested passing current along a plasma pinch, and this was the first step towards the tokamak concept. This (Russian) abbreviation was proposed by I N Golovin and N A Yavlinskiĭ for the Toroidal Chamber with Magnetic Coils they worked on. A D Sakharov and I E Tamm also emphasised the need for investigating stabilities occurring in a toroidal plasma. Experimental and theoretical work along these lines has lengthened out for decades since then.

The first step in this direction was made by M A Leontovich and V D Shafranov in their large-scale plasma instability studies [3, 4]. The criterion for stability established by V D Shafranov yielded the upper bound on plasma current thus roughly determining the current-magnetic field operation region.

Plasma in tokamaks was first rather dirty and cold, but step by step it became cleaner and hotter as research in this field was gradually but steadily advancing. S I Braginskiĭ, V D Shafranov and N A Yavlinskiĭ [5] advanced theoretical arguments showing tokamaks to be superior to then fashionable stellarators, and at the 1968 IAEA Conference (Novo-

B B Kadomtsev Russian Research Centre 'Kurchatov Institute', Nuclear Fusion Institute
46 Kurchatov Square, Moscow, 123182, Russia
Tel. (7-095) 196 98 14
Fax (7-095) 943 00 73

Received 27 February 1996
Uspekhi Fizicheskikh Nauk **166** (5) 449–458 (1996)
Translated by E G Strel'chenko; edited by A Radzig

sibirsk, USSR), L A Artsimovich was quite unambiguous that plasma confinement in tokamaks was vastly superior to that in stellarators. Soon afterwards the stellarator S in Princeton, NJ was transformed into the by far better confining tokamak ST, and in the early 70s many laboratories across the world started to build tokamaks.

In 1967, A A Galeev and R Z Sagdeev [6] developed the so-called neoclassic transport theory describing in a more sophisticated manner trajectories of charged particles in plasma. The theory seemed to treat adequately the behaviour of ions in tokamaks [7] until it was shown that plasma processes are in fact of a more complex nature than had been expected. Nevertheless, neoclassic theory proved to be very useful in estimating the minimally possible fluxes of heat and particles, particularly impurities, in the plasma. Moreover, an absolutely new and unexpected effect, maintaining a plasma current by edge-directed particle diffusion, was predicted [8-10]. This phenomenon came to be known as the bootstrap current, a reminder of the well-known episode in which Carrol's Alice managed to support herself in the air by just pulling her shoelaces. The bootstrap current (together with the RF- or particle-beam-generated current) provides the sound basis for achieving a steady-state tokamak plasma confinement.

By the late 60s, basic tokamak processes, and in particular plasma instabilities, appeared to have been fully understood (later investigations showed the real picture to be by far more complex though). The situation at that time was summarised in two short papers in *Physics – Uspekhi*. L A Artsimovich [11] reported on experimental results showing promise for further improvement in plasma parameters, and pointed out that, apart from the ohmic mechanism, some additional plasma heating methods must be developed. B B Kadomtsev [12] presented the classification of plasma instabilities [13] and assessed their respective roles in plasma confinement. Although it turned out that plasma is practically always unstable toward drift instabilities, the corresponding transport processes did not put any insurmountable obstacles on the way to the reactor. According to rough estimates, the product of the minor plasma radius by the intensity of the toroidal field should be no less than 10 m·T (to be compared, say, with a factor of 1.5 as much in ITER).

In 1975, two new tokamaks, T-10 in the USSR and PLT in the USA, were put into operation, which, with ohmic heating alone, yielded plasma temperatures of about 1 keV (i.e. ten million degrees), and it was shown that plasma parameters improved with a growth in its size. This offered a promise for further advancements in research.

As the T-10 and PLT facilities were being provided with additional plasma heating equipment, the question started to be contemplated by physicists in various countries as to what was to be done next, the goal being, understandably, plasma

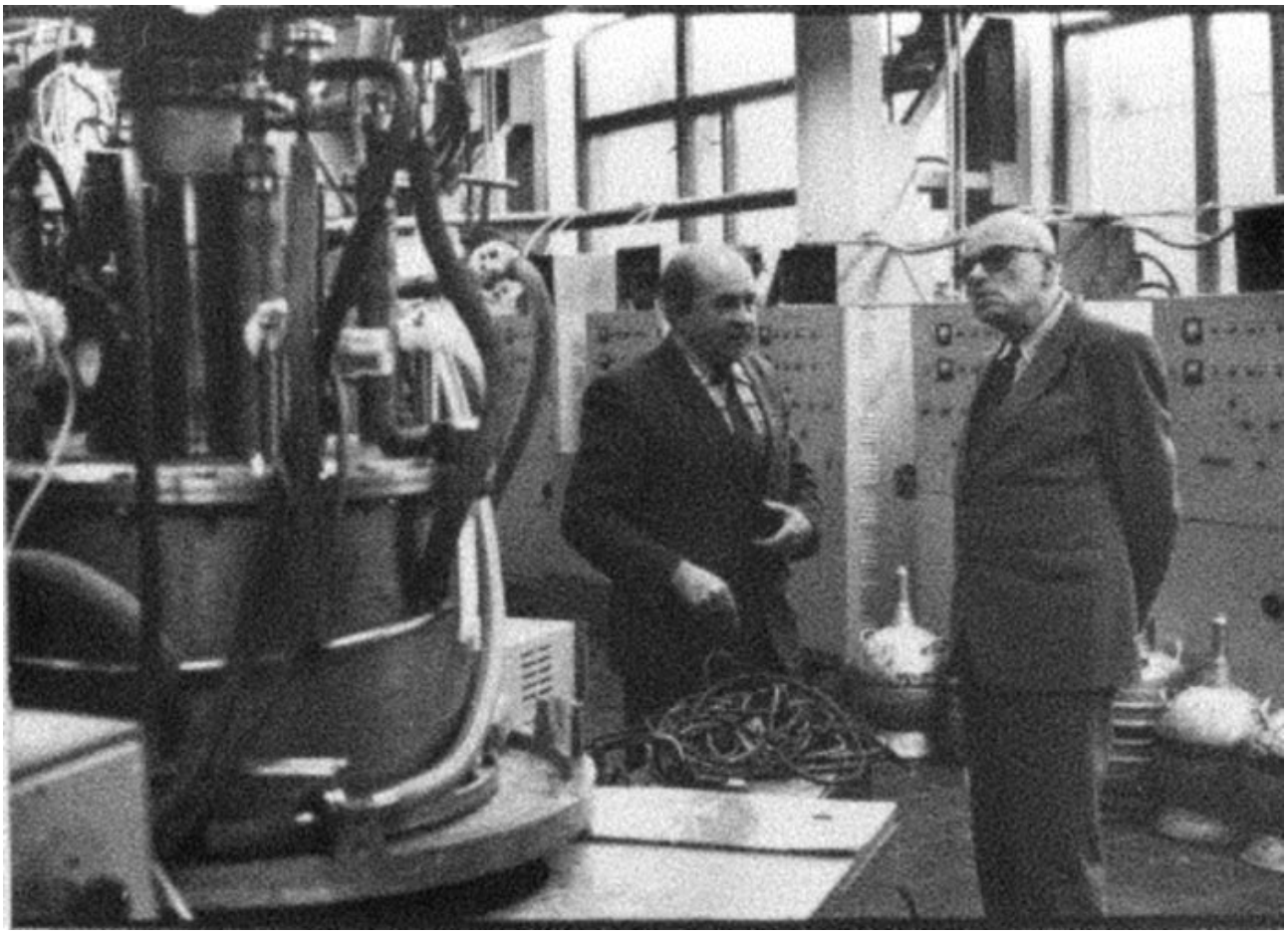

By the tokamak T-10 gyrotron complex in the I V Kurchatov Institute of Atomic Energy, 1987 (photo by Yu E Makarov).

temperatures and densities necessary for the fusion reactor to operate (reactor-grade plasma). Thus work on the set of five world's largest tokamaks was initiated, which included TFTR in the USA and JET in the European Community, Japanese JT-60, Soviet T-15, and French TORE-SUPRA. Already in the design phase of the projects much attention was given to the complementary nature of both the future technologies and the results to be obtained from the approaching facilities. Compared to 5 m^3 in T-10 and PLT, the new generation facilities possessed by far larger plasma volumes of about 25 m^3 in T-15 and TORE-SUPRA, about 40 m^3 in TFTR, 60 m^3 in JT-60, and 160 m^3 in JET.

Whereas the TFTR, T-15, and TORE-SUPRA plasmas are of circular cross section, those in JET and JT-60 display a more attractive shape with an elongated cross section allowing the use of a divertor. Of the family of large tokamaks, two ones — T-15 and TORE-SUPRA — employ superconducting windings of toroidal-magnetic-field coils based on the highly-promising niobium-tin intermetallide and superfluid-helium-cooled niobium-titanium alloy, respectively. Each facility is equipped with additional plasma heating components of some kind.

Large tokamaks started to be put in operation one by one in the early half of the 80s, but on some of them much further effort has since had to be expended on improving the equipment and designing highly effective means of additional heating. Two tokamaks, TFTR and JET, offer the possibility of working with deuterium–tritium plasma, and accordingly experiments on proceeding the D-T reaction were carried out in the 90s. Notice that the strong-magnetic-field domestic facility TSP also can be operated on a D-T plasma.

Shortly after its launch, the PLT facility was equipped with an injector of fast neutral atoms, and an ion temperature of 6.6 keV was achieved [14]. Somewhat later [15], an electron temperature of 10 keV was attained on the T-10 using the Institute for Applied Physics RF generators (gyrotrons). It thus was evident that from the plasma heating point of view it was also more or less all clear. Notice here that the last generation facilities (TFTR in the USA [16], JET in Europe [17], and JT-60U in Japan [18]) gave a plasma temperature of 30 – 40 keV, i.e. vastly above 10 – 15 keV necessary for the deuterium–tritium reactor. And finally, the D-T reaction in the American tokamak TFTR, which is the most radical step on the way toward the fusion reactor, produced a power of about 10 megawatt [19].

The improvement in tokamak plasma parameters raised speculations on whether the tokamak might be a starting point for thermonuclear reactor development. An American physicist and engineer D Rose repeatedly stressed the necessity of unifying international efforts for solving the formidable problem of the thermonuclear reactor, and it did not take long to realise this idea. In 1979, at E P Velikhov's initiative, the International Council for Thermonuclear Fusion advised the Director General of the IAEA (International Atomic Energy Agency) to set up an international INTOR development group. The scientists and engineers from the European Community, USSR, USA, and Japan were participating in the project.

To start the ball rolling, the available databases had to be assessed first. A detailed discussion showed that the existing knowledge was enough to begin, and as to some gaps in it, certain assumptions could be made which then looked quite natural and did not require much extrapolation. It took several years to develop the concept of the INTOR reactor, to optimise the project, and to analyse possible improvements around the fresh ideas.

A D Sakharov, S Yu Luk'yanov, and B B Kadomtsev in the T-15 tokamak hall, 1987 (photo by Yu E Makarov).

As new tokamaks were put into operation in the early and middle 80s, information from large (JET, TFTR) and medium-size (ASDEX, DIII-D, ALCATOR, etc.) facilities started flooding. The new results were quite surprising in that plasma confinement did not improve with size as rapidly as interpolated from smaller facilities in a direct way. A silver lining was a higher confinement mode observed on ASDEX [20] and called the H (high) mode to be distinguished from the ordinary L (low) mode. Although this raised some hopes, it was by and large clear that, viewed in the light of the existing knowledge, the INTOR concept was not the optimum one.

Now fusion research was carried out against the background of major political events. In the mid-80s, the Soviet Perestroĭka began, and following the Soviet-American and Soviet-French summits, a trend to a closer international cooperation in science and technology, with immediate consequences in CTF (Controlled Thermonuclear Fusion), was established. As early as 1986, technical discussions began, and in 1988, a four-party agreement on the International Thermonuclear Experimental Reactor (ITER) was reached under the aegis of the IAEA, in which the main phases of the project were set out.

The first, CDA (Conceptual Design Activity) phase took three years, from 1988 to 1990, during which time the main reactor parameters were determined, the entire layout of its main and auxiliary elements discussed, and construction mechanics and thermal physics of the reactor was evaluated.

In 1992, the EDA (Engineering Design Activity) phase began. In the period between the CDA and EDA phases, a special international working group revised the project and gave its recommendations concerning the basic goals and parameters of the reactor. The EDA phase is supposed to end in 1998 by issuing full technical documentation sufficient for making a decision on the reactor construction.

The organisation of the International Project turned out to be very complex structurally. The central team is located in San Diego, USA. It is assisted by a German and Japanese teams, who took upon themselves the task of developing the chamber with a blanket and the magnetic system of the reactor. In Russia, a small group under the ITER Council Chairman, E P Velikhov, works. The work on the project is being regularly assessed by the ITER Technical Advisory Committee. In addition, in each of the member countries a domestic project team has been set up.

In spite of this rather complex organisation, the work is conducted in a well-coordinated and harmonious fashion, and each year a huge amount of information is processed thus facilitating a more in-depth development of the project.

2. Tokamak plasma

First generation tokamaks were very simple constructive (see Fig. 1), something like a large transformer with an iron core and a multiturn primary winding, the secondary one being represented by a plasma turn placed in a vacuum chamber (more precisely, the short-circuited plasma turn appeared only after a gas discharge occurred in a toroidal vacuum chamber as the primary winding current was increased). As a preliminary step, a strong toroidal magnetic field B was produced along the plasma torus with a current I, and the current created a field $B_\theta = I/5a$ at the edge of the pinch, where a is the minor radius of the plasma turn (the units used here are the tesla for a magnetic field, megaampere for a current, and metre for linear dimensions).

The field induction B_θ in the tokamak is generally an order of magnitude smaller than B. Since the plasma column tends to swell along the large radius, the corresponding force should be compensated by an additional vertical magnetic field [21]. Windings 4 in Fig. 1 are intended for producing the transverse magnetic field and are called poloidal magnetic field coils. In order to maintain a current in the plasma, a longitudinal eddy electrical field $E_{||} = U/2\pi R$ should be created, where U is the by-pass voltage, and R is the plasma turn major radius. Since this field is sustained by increasing the primary winding current, tokamaks plasmas are almost always produced only for a relatively short period of time, i. e. in the form of short current pulses.

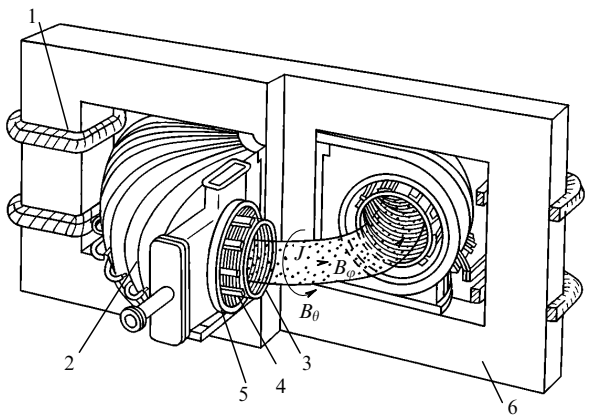

Figure 1. Schematic of a tokamak: *1* — inductor, primary winding of the transformer; *2* — toroidal magnetic field coils; *3* — liner, vacuum chamber; *4* — poloidal magnetic field coils; *5* — copper housing; *6* — iron core.

The current traversing a plasma heats it to high temperatures of generally millions of degrees. At the same time, an intense thermonuclear reaction requires more than a hundred million degrees to occur. Consequently, in later generation tokamaks, additional heating techniques, such as RF fields or the injection of high-energy neutral hydrogen isotopes, are employed. As to the former, the frequency of the field is chosen so as to be in resonance with one of the intrinsic plasma frequencies. Accordingly, ion-cyclotron, electron-cyclotron, or lower-hybrid-frequency heating are used.

Plasma in the tokamak must be globally stable. The criterion for stability against the most dangerous — helical — mode was developed independently by Shafranov and Kruskal and takes the form $q_a > 1$, where the dimensionless quantity $q_a = aB/B_\theta R$ has come to be known as the 'margin factor'. Experiments have shown that a plasma may be sufficiently stable at $q_a > 2 \div 3$. Since $B_\theta = I/5a$, the Kruskal–Shafranov criterion poses a restriction on the magnitude of the plasma current: $I = 5a^2B/q_aR < 5a^2B/R$. Since a large plasma current is desirable for a number of reasons, it was suggested already at the early experimental stage [22] that instead of the simplest circular column, a vertically elongated pinch should be used. The vertically elongated cross section of the plasma turn is generally characterised by the horizontal half-width a and the vertical half-width b. The ratio $\kappa = b/a$ is called the coefficient of elongation.

The elongation of the plasma cross section is performed by means of the poloidal magnetic field coils. This is, in a sense, adding two turns carrying currents in the same direction as the plasma current, one turn being above and the other, below the plasma turn. It is readily seen that such current carrying turns do indeed elongate the cross section of the plasma column. One cannot stretch out the plasma too much, however, because of the danger that the plasma will 'adhere' to one of the turns of the poloidal field and hence the plasma column will become unstable towards a vertical displacement. As shown experimentally, the elongation coefficient $\kappa = b/a$ must not exceed two.

The vertical elongation of the plasma turn easily gives rise to a poloidal divertor configuration [22], in which magnetic field lines are located on closed toroidal surfaces only within what is named the separatrix surface. Outside the separatrix, the field lines are open and free to continue up to the chamber walls. If the fields are fully symmetric with respect to the median plane, there are two points at the separatrix where the transverse magnetic field component is zero. This is a double-null divertor configuration. If the system possesses an up-down asymmetry, a single-null magnetic configuration — and hence a single-null divertor — may be formed.

For the tokamak reactor, a plasma with a sufficiently high pressure p is desirable. It turns out, however, that the magnitude of the pressure is bounded from above for specified toroidal magnetic fields and plasma currents. A first restriction is just a consequence of the equilibrium condition. Plasma in the toroidal magnetic field is expelled along the major radius by a volume force $2p/R$. This force can

be compensated by the poloidal magnetic field pressure, but the latter can add by no more than $B_\theta^2/8\pi a$. Thus, the equilibrium condition with respect to the major radius implies the restriction $p < RB_\theta^2/16\pi a$. The ratio of the plasma pressure p to the magnetic field pressure $B^2/8\pi$ is usually designated by the symbol β. Thus, the equilibrium condition implies the restriction

$$\beta < \frac{1}{10q_a} \cdot \frac{I}{aB} .$$

A similar restriction is found to follow from the stability condition. The point is that at higher pressures the so-called ballooning instability in the form of 'bulges' at the outside contour of the plasma turn, may develop in the plasma. The corresponding restriction on β was found by computer simulation and termed the Troyon criterion [23]. It has the form $\beta < gI/aB$, where g is approximately equal to 3×10^{-2}.

The conditions $q_a > 2 \div 3$ and $\beta < gI/aB$ impose a limitation on the operation region of a stable plasma. One further tokamak limitation is that the plasma density cannot be made arbitrarily high. The density limit is associated with the atomic radiation and charge exchange processes important at the edge of the plasma. The limit was established by Hugill, but is customarily written in a simplified Greenwald form: $\bar{n}_{\mathrm{Gr}} = I/\pi a^2$. Here, the number density n is in the units of 10^{20} m^{-3}; the radius a, in metres, and the current I, in megaamperes. It is hoped that this limit will increase as plasma heating power is growing.

Of all the problems associated with the tokamak concept that of magnetic thermal insulation turned out to be the most difficult one. The quality of plasma confinement is generally characterised by the parameter τ_E, which is known as the 'energy confinement time' and introduced as follows. Let w_{th} be the total thermal energy of the plasma. Then the rate of the plasma cooling can be written in the form $\dot{w}_{\mathrm{th}} = -w_{\mathrm{th}}/\tau_E$, where τ_E has a dimensionality of time. If the plasma is heated, externally or internally, then the heater power input P should be added to the right. Accordingly, in the steady-state regime the relation $P = w_{\mathrm{th}}/\tau_E$ holds. In the D–T reactor, the magnitude of P is determined by the power P_α, which is contributed by the charged products of the D–T reaction, i.e. by α-particles. Recall that the D–T reaction looks like $\mathrm{D} + \mathrm{T} \rightarrow n + {}^4\mathrm{He} + 17.6$ MeV. Of the energy released, 80% is taken away by the neutrons, and 20% remains in the plasma in the form of 3.5-MeV α-particles. Thus, in the reactor we have $P_\alpha = 1/5P_{\mathrm{fus}}$, where P_{fus} is the total fusion power. Accordingly, for the fusion reaction to be self-sustained it is required that $P_{\mathrm{fus}} = 5w_{\mathrm{th}}/\tau_E$.

The quantities P_{fus} and w_{th} are obviously proportional to the plasma volume V. But τ_E was found also to increase with plasma volume, as indeed it should be if energy losses are dominated by thermal conduction. To come closer to meeting the D–T plasma ignition and self-sustaining conditions, it turned out that the volume of the tokamak plasma must exceed 1000 m^3. Thus, the real plasma confinement is a far cry to its ideal classical MTR picture which admits steady-state burning of a purely deuterium plasma in a volume of 1000 m^3.

The quantity τ_E is determined primarily by the electron and ion heat transfer mechanisms, and they seemed at first to be quite amenable to purely theoretical evaluation. First, the classical transport theory involving Coulomb pair collisions of charged particles, and then the neoclassically revised picture of particle trajectories in a weakly collisional toroidal plasma appeared to be reliable tools for heat loss calculations. As it turned out, however, things were not quite that simple: a large body of collective processes was developing in the tokamak plasma.

The situation here is similar to that of an ordinary fluid flow. Only in the case of laminar flows such as Poiseuille's one, the flow can be fully treated theoretically. Most flows, whether in Nature or in technical devices, are turbulent yet. There are no rigorous methods for computing turbulence, but in most cases semiquantitative schemes, for example, the introduction of the mixing length, prove adequate, notably when complemented by numerical flow simulation using appropriate dimensionless parameters.

Similar approaches can be recommended for tokamak plasma applications. First, a dimensional analysis based on reasonable dimensionless parameters can be useful [24 – 26]. Some of these parameters have already been mentioned and include the margin factor q_a, the plasma to magnetic field pressure ratio β, and the cross sectional elongation κ. To these one naturally adds the aspect ratio $A = R/a$. One can also introduce the dimensionless plasma size a/ρ_i, where $\rho_i = v_{T_i}/\omega_{B_i}$ is the average Larmor radius of the ions; $v_i = \sqrt{2T_i/m_i}$ is their thermal velocity; T_i, the ion temperature; m_i, the ion mass, and ω_{B_i}, the ion cyclotron frequency. Some workers introduce the ratio R/λ, where λ is the Coulomb-collisional mean free path of charged particles (electrons or ions). However, since in the tokamak plasma λ is a giant quantity measured in kilometres, the parameter R/λ is of minor significance. To characterise atomic processes, one also introduces the dimensionless Hugill parameter $H = nq_aR/B$, where n is the average number density of plasma particles (electrons or ions) expressed in units of 10^{20} m^{-3} (its nondimensionality is seen from the relation $H = \mathrm{const} \times enq_aR/B$, where e is the electron charge, and B is the toroidal magnetic field induction).

Using dimensionless parameters and applying plausible physical arguments, one might attempt to estimate the value of τ_E. Let us discuss this point in more detail. The minimum plasma lifetime can be estimated as a/v_{T_i}, the value it would have in the absence of the magnetic field, in which case the plasma flies apart with a velocity v_{T_i}. With the magnetic field present, a more natural velocity characteristic is the so-called drift velocity $v_{\mathrm{D}} = v_{T_i}\rho_i/a$. The corresponding plasma leak (in SGS units) is described by the Bohm formula: $\tau_{\mathrm{B}} = \pi a^2 eB/cT$, where c is the speed of light, B is the total magnetic field induction, T is the average plasma temperature, and a is the minor radius. While the Bohm formula was good for experiments on small stellarators, it underpredicted tokamak results. Rather than a/v_{D}, a more natural choice is $a^2/v_{\mathrm{D}}\lambda_\perp$, where $\lambda_\perp$, the transverse mixing length, is much smaller than a.

The natural assumption that the mixing length $\lambda_\perp$ is on the order of the average ion Larmor radius ρ_i will result in what has come to be known as the gyro-Bohm dependence. It is this finding which led to optimistic prediction [12] that plasma characteristics would improve with increasing size.

As subsequent experiments have shown, real heat transfer mechanisms in the tokamak plasma are much more complex, and although there is little disagreement as to the order of magnitude of the gyro-Bohm scaling results, the manner in which the data vary with plasma parameters is different from what is predicted by the simple gyro-Bohm expression. The key experimental result is that heat transfer mechanisms are highly nonlinear. It was found that various and rather

different confinement modes may coexist in the tokamak plasma. The most well-known transition from one mode to another is the L → H transition. As this takes place, the plasma acquires a thermal barrier at its periphery — 'puts on a shirt', as the saying goes — and its τ_E is doubled. The most plausible explanation of the L → H transition is the development of shear flow at the plasma periphery [27], which 'crushes' convective cells thereby creating a zone of reduced thermal conductivity. Experiments show that a transition to the H mode occurs only at sufficiently high plasma heating powers.

Apart from the H mode, other modes of improved plasma confinement exist. In the DIII-D facility, for example, the VH (very high) confinement mode was observed under conditions where the current density distribution over plasma radius possessed a kink in the centre [28]. A similar mode was seen at the TFTR facility in addition to the previously found S (Supershot) mode [29].

There is a wide variety of other phenomena observed in the tokamak plasma. One example is nonlinear relaxation oscillations near the centre of the plasma and at its periphery. Relaxation oscillations near the plasma column axis were called saw-tooth oscillations and they look like periodically repeated slow electron temperature rises followed by a rapid heat removal from the centre beyond a certain 'inversion radius' r_s. Generally r_s is a small fraction of a, so that the relaxation saw-teeth oscillations do not influence the plasma much, their effect being principally to restrict the current density at the column axis. Sometimes, though, r_s is comparable to the plasma radius, and then the effect of the saw-teeth oscillations on plasma confinement may be large. The relaxation oscillations at the periphery were called ELMs (Edge Localised Modes). They moderately affect the plasma confinement, reducing τ_E by about 15%.

An interesting class of tokamak plasma phenomena is associated with profile effects. It has long been recognised that the response of the plasma to changes in temperature, number density, and current density distribution profiles is by far stronger that simple diffusion equations would suggest. In many cases this response looks like a tendency of the plasma to establish — and then to maintain — some optimum profiles. A detailed study of the profile effects was carried out on a T-10 set-up with ECR heating [30]. The most plausible explanation of this effect is that the optimum profiles correspond to a neutral state between the laminar picture of smooth magnetic surfaces embedded one to another on the one hand, and of configurations with weakly stochastised magnetic field lines on the other. In this case, the plasma is provided with opportunity to change transport mechanisms across the plasma column and thus to adjust its profiles.

Such autotuning, however, is only possible for small deviations from the optimum profiles. At large deviations, more dramatic changes may occur. A positive example is the transition from the L to H confinement mode. Sometimes, however, a very unpleasant variant of the nonlinear response, the so-called disruption instability, is realised. If the internal disturbances of the plasma magnetic fields become large enough, a 'stochastic explosion' occurs. The magnetic field lines become stochastised and the plasma energy is rapidly released at the walls, which is followed by a total destruction of the magnetic configuration and by the current interruption. Disruptions are a very unwelcome path of plasma evolution, a mini-failure in a sense, and experience shows that at the early device adjustment stages a large fraction of pulses end up this way. As the adjustment process goes on, the fraction of disruptive charges is generally decreased. Hopefully, a more in-depth study on the physics of disruption will show how to eliminate this phenomenon or at least greatly reduce the fraction of disruptive pulses.

The grave drawback of a tokamak lies in its pulsed nature: plasma exists only if there is a current, and the latter may only be maintained for a limited period of time by an eddy electric field. The need for the steady-state tokamak regime is a long-standing problem. In principle, such a regime may be achieved by maintaining a current with nonohmic means either by applying RF electromagnetic fields or by tangentially injecting the high-energy neutrals. The whole of the problem hinges on exactly what power is necessary to maintain such a current: clearly it must, if anything, be much less than that of the fusion reactions involved. Hopes are presently pinned on the bootstrap current: if the bootstrap contribution is raised to 70 – 80%, to sustain the remaining 20 – 30% of the current will be quite a realistic problem.

Further requirements to a stationary reactor are to continuously inject a newly prepared fuel, i.e. the deuterium-tritium mixture, and to remove ashes, i.e. helium and stray impurities, from the plasma. This task is performed by the divertor, a special chamber designed to collect the open, edge lines of force.

As one can see, the tokamak-based fusion reactor poses a very complex design problem. It has already taken over forty years of painstaking studies up on the physics of high-temperature plasma, and will require a huge amount of research and development efforts in the future, but there are ideas as to how to obviate obstacles on this way, and they are associated with the ITER project.

3. ITER project

The principal aim of the International Thermonuclear Experimental Reactor (ITER) is the ignition and subsequently the extended burning of deuterium-tritium plasma. In order that the experience with ITER could be transferred into future reactors, its neutron flux must correspond to an energy flow of 1 MW m^{-2}. The total neutron fluence would run to a value of no less than 1 MW year m^{-2}. The ITER can operate with a plasma by long-duration pulses of about 1000 s, but experiments to assess the feasibility of steady-state operation remain to be run. The pulse length of 1000 s implies the continuous fuel renewal and that the ashes will be removed from the plasma. Therefore, the ITER divertor is assigned the important task of carrying away a large part of the heat flux from the plasma, as well as renewing the fuel.

Figure 2 shows the sectional view of the ITER reactor. As one can see, the design of the ITER is extremely complex, and its dimensions are really cyclopean. To make the first reactor smaller did not prove possible, however: the requirements for a protracted self-sustained fusion reaction and a neutron flux of 1 MW m^{-2} yield the size given automatically.

Figure 2 shows clearly the main elements of the magnetic fusion reactor ITER. This is, first of all, the vacuum chamber containing a high-temperature deuterium-tritium plasma. The plasma is seen to be vertically elongated in its cross section. Below the plasma is the divertor, which collects the lines of force from the outer, open magnetic surfaces. Along these lines, the radially diffusing plasma goes to the divertor's planes, which must take away about half of the power

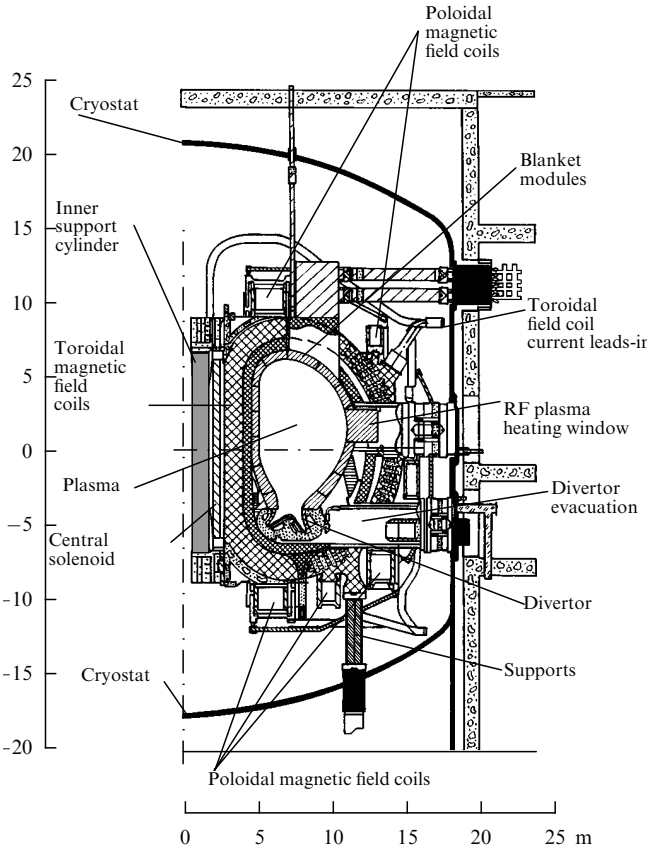

Figure 2. Sectional view of the ITER reactor.

released by the D-T reaction with the α-particles. The other half will be radiated and absorbed by the blanket walls. The design of the divertor is sufficiently complex because it is desired that its configuration gives rise to the 'cushion' of a dense cold plasma in the divertor. The radiation from, and gas cooling of, this plasma may reduce the danger of the local overheating of the divertor plates.

To confine a high-temperature plasma, a complicated system of magnetic fields is used. In Fig. 2, the huge coils of the toroidal magnetic field are depicted. The outside of them are placed several poloidal field coils, which serve to form and confine the plasma of prescribed configuration. In the central part of the tokamak there is the inductor, which generates the eddy electric field for inducing and maintaining the plasma current. All the coils must be made of a superconducting material, so that the whole of the tokamak is placed within a large cryostat. The magnetic field strengths being as they are at the limits of technical capabilities, special coil-fastening mechanical structures or inserts are needed, adding to the rigidity of the magnetic system.

Figure 2 does not show additional plasma heating components as they are outside of the main tokamak hall. Nor are the cooling system for superconducting windings and the reactor heat removal system shown.

A table of some principal ITER parameters looks as follows:

Major radius $R = 8.11$ m
Minor radius $a = 2.8$ m
Plasma elongation $\kappa = b/a = 1.6$
Plasma current $I = 21$ MA
Toroidal field induction $B = 5.7$ T
Energy confinement time $\tau_E = 6$ s
Plasma thermal energy $w_{\text{th}} = 1.2$ GJ
Plasma magnetic energy $w_{\text{mag}} = 1.1$ GJ
Fusion power $P_{\text{fus}} = 1.5$ GW
Burning time $t_{\text{burn}} = 1000$ s
Neutron fluence $P_N = 1$ MW m^{-2}.

As one can see, the reactor is highly impressive in size and very powerful. All this is dictated by plasma phenomena, or more precisely by the physics of the magnetic confinement of plasma. Several explanatory remarks are in order here.

The main characteristic of plasma confinement constitutes the energy confinement time τ_E. Over the years, a great deal of data has been collected from many tokamaks on the dependence of τ_E on plasma parameters, and on this basis purely empirical scalings expressing this dependence for many parameters of interest were obtained. The main tendency shown by these scalings is the sufficiently strong (stronger than linear) dependence of τ_E on the product IR (may be yet on IR^2), and its $-1/2$ or even $-2/3$ power law variation with the plasma heating power P (for a plasma with a self-sustained burning, P corresponds to the plasma heating power due to α-particles). Figure 3 illustrates the scaling of the energy confinement time derived from the experiments on ASDEX, CMOD, DIII, DIII-D, FTU, JET, JFT2M, JT60, PBXM, PDX, Textor, Tore-Supra, TFTR, and, finally, T-10. The scaling for the ordinary L mode predicts very short confinement time thus showing this mode to be of no use for the reactor. We are therefore left with the H mode. The H-mode scaling was obtained from data on noncircular cross section plasmas (ASDEX, DIII-D, JET, JFT2M, PBXM, PDX). The scaling for ELM charges (i.e. for those with edge localised relaxation oscillations) was found equal to $0.85\,\tau_{\text{ELM-free}}$, where $\tau_{\text{ELM-free}}$ corresponds to ELM-free charges. Fig. 4 illustrates the accuracy with which the experimental data are fitted by this relation, and Figs 3, 5 demonstrate the reliability of the scaling for ELM-free charges for the L and H modes. We see that the available data are sufficient for a confident extrapolation of τ_E to ITER parameters, and it is precisely this extrapolation which yields the large size of the ITER plasma.

For the transition from the L to H mode to occur, the plasma heating power must be high enough, $P > P_c$. The

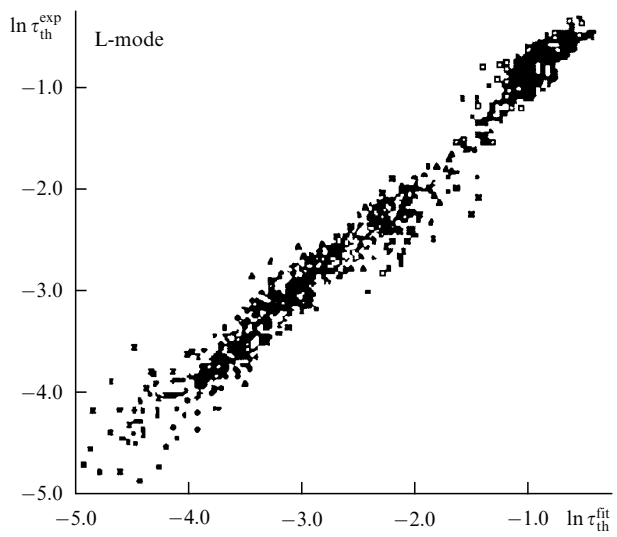

Figure 3. Scaling of the energy confinement time for the L mode.

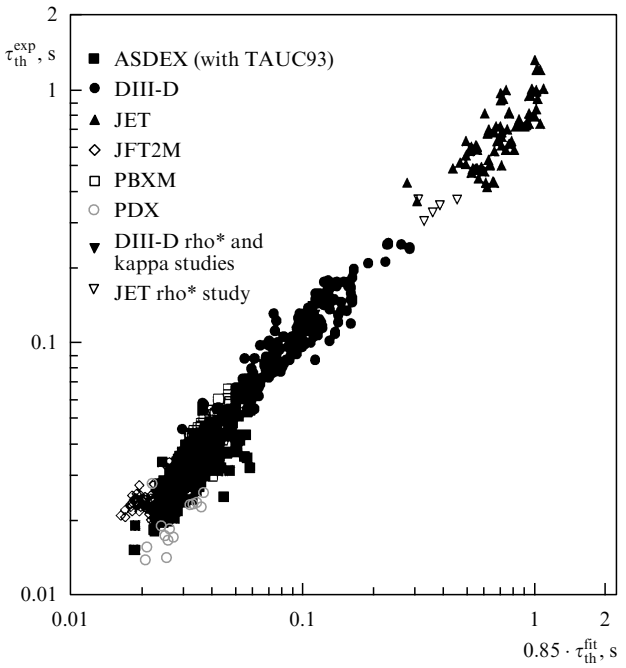

Figure 4. Comparison of energy confinement time scalings for H modes with and without ELM oscillations.

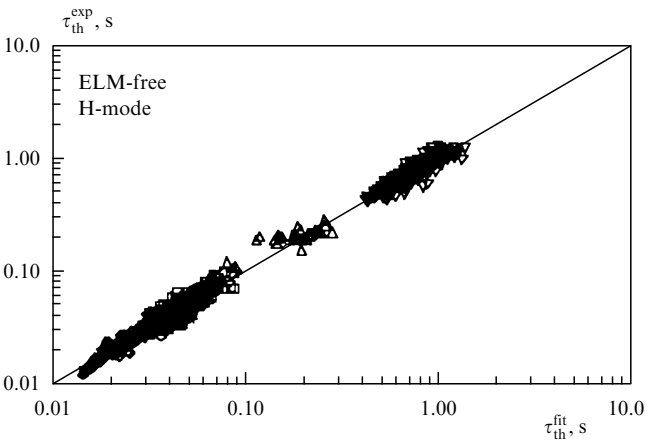

Figure 5. Scaling of the energy confinement time for H modes without ELM oscillations.

scaling for the critical power P_c has not yet been established very reliably. The simplest one, $P_c \sim nBS$, where S is the plasma surface, does predict the transition in the ITER, but the margin factor is rather small.

As noted earlier, the ITER has also β and density limitations. Although neither is exceeded, again the margin factor is low. Thus, there are many plasma parameters with respect to which the ITER is close to its limits.

This is precisely the reason why the ITER tokamak cannot be downscaled significantly if its operating regime is supposed to secure the extended self-sustained D-T plasma burning and if in its magnetic windings currently available superconducting materials are employed.

There are, of course, some fears associated with the large size of the ITER plasma. The plasma current $I = 21$ MA, three times that of the (largest) tokamak JET, is impressive in itself, but its thermal and magnetic energy, even more so. If a disruption instability happens to occur, this energy will of course rush onto the walls around the plasma, and this, experiments shows, threatens not only with thermal but also with large mechanical loads because of the unpredictable nonuniform 'halo' currents that may flow between internal construction elements. All these effects are under the close scrutiny of both the ITER working group and domestic teams.

The ITER is a nuclear fusion reactor which can be viewed as the testing ground for various nuclear systems. Fig. 2 shows that the plasma is surrounded by a special construction known as the blanket. The blanket in a deuterium-tritium fusion reactor must contain either pure lithium or some its salts. In natural lithium, neutrons from the D-T reaction must produce tritium. The nuclei of the ^{7}Li isotope are simply fissioned by fast neutrons into the ^{4}He and T components, whereas those of the lighter isotope ^{6}Li may capture the slowed-down neutrons to break up into ^{4}He and T nuclei. Thus, the lithium blanket does not only reproduce tritium but can produce it newly. This makes tritium just an intermediate fuel necessary to maintain the D-T reaction and emphasises the role of lithium as the basic fuel for energetics purposes.

The ITER blanket will be manufactured as an assembly of a large number of modules about 1 m $\times$ 1 m in size, most of which will be lithium-free and will only serve to take away energy and protect the magnets from the neutron fluxes. However, the installation and testing of lithium-containing blanket modules is also envisaged by the experimental ITER program, as a means of advancing the fusion reactor technology.

4. Conclusions

The ITER project starts a qualitatively new phase in fusion research. All previous experimental and theoretical work in this field was focused on the study of high-temperature plasma physics and aimed at providing the scientific basis for the fusion reactor. Paralleling scientific developments were, of course, accompanied by improvements in technology, but these were not the end in itself and only served to meet the demands of experiment.

The objective of the ITER project is entirely different, and this is a real fusion reactor capable to secure the ignition and protracted burning of a deuterium-tritium plasma. In addition to a plasma physics database, this requires extensive engineering efforts and major advances in the technology of fusion as a new form of energetics. Of course, as the design and construction of the ITER reactor progress, increased knowledge of the plasma physics will be needed. This line of research, however, should not be considered from the fundamental physics viewpoint but rather as the development of plasma engineering for the purposes of fusion reaction optimisation.

Research in controlled thermonuclear fusion in general and tokamak studies in particular have gone a long way from small facilities to grandiose modern machines. Last generation tokamaks have produced plasmas that are hot and dense enough to be used as a working body for a fusion reactor. The American TFTR tokamak have generated a real 10-MW deuterium-tritium reaction. One can therefore argue that after so many years of work there is now a sufficient scientific basis to allow the transition to the design and construction phase of the fusion reactor project.

And looking back in time, all these studies began in 1950, when A D Sakharov and I E Tamm showed that, apart from its military application, thermal nuclear fusion held promise as an entirely new source of peaceful power. Since then, inspired by this fascinating idea, many researchers and engineers have devoted their talent and tenacious effort to providing the physical basis for its realisation.

References

1. Tamm I E *Teoriya Magnitnogo Termoyadernogo Reaktora* (Theory of the Magnetic Thermonuclear Reactor), in *Fizika Plazmy i Problema UTS* (Plasma Physics and the CTF Problem) Vol. 1 (Moscow: Akad. Nauk SSSR, 1958) P. 1, p. 3; P. 3, p. 31
2. Sakharov A D *Teoriya Magnitnogo Termoyadernogo Reaktora* (Theory of the Magnetic Thermonuclear Reactor), in *Fizika Plazmy i Problema UTS* (Plasma Physics and the CTF Problem) Vol. 1 (Moscow: Akad. Nauk SSSR, 1958) P. 2, p. 20
3. Leontovich M A, Shafranov V D, in *Fizika Plazmy i Problema UTS* (Plasma Physics and the CTF Problem) Vol. 1 (Moscow: Akad. Nauk SSSR, 1958) p. 207
4. Shafranov V D *At. Energ.* (5) 38 (1956)
5. Braginskiĭ S I, Shafranov V D, Yavlinskiĭ N A *Sravnenie Sistem "Stellarator" i "Tokamak"* (Stellarator versus Tokamak) Report N 625/B, approved by L A Artsimovich on 13 December 1958 (Moscow: IAE, 1958) (unpublished)
6. Galeev A A, Sagdeev R Z *Zh. Eksp. Teor. Fiz.* **53** 348 (1967) [*Sov. Phys. JETP* **26** 223 (1968)]
7. Artsimovich L A *Nuclear Fusion* **12** 215 (1972)
8. Galeev A A *Zh. Eksp. Teor. Fiz.* **59** 1378 (1970) [*Sov. Phys. JETP* **32** 752 (1971)]
9. Bickerton B J, Connor J W, Taylor J B *Nature* (London) **229** 110 (1971)
10. Kadomtsev B B, Shafranov V D *Plasma Physics and Contr. Nuclear Fusion Res.* Vol. 1 (Vienna: IAEA, 1971) p. 479
11. Artsimovich L A *Usp. Fiz. Nauk* **91** 365 (1967) [*Sov. Phys. Usp.* **10** 117 (1967)]
12. Kadomtsev B B *Usp. Fiz. Nauk* **91** 381 (1967) [*Sov. Phys. Usp.* **10** 127 (1967)]
13. Kadomtsev B B, Pogutse O P *Voprosy Teorii Plazmy* **5** 209 (1967)
14. Eubank H P et al. *Phys. Rev. Lett.* **43** 270 (1979)
15. Alikaev V V et al. *Fiz. Plazmy* **14** 1027 (1988)
16. Meade D M et al. *Plasma Phys. Contr. Nucl. Fus. Res.* Vol. 1 (Vienna: IAEA, 1990) p. 9
17. JET Team *Plasma Phys. Contr. Nucl. Fus. Res.* Vol. 1 (Vienna: IAEA, 1990) p. 27
18. JT-60 Team *Plasma Phys. Contr. Nucl. Fus. Res.* Vol. 1 (Vienna: IAEA, 1990) p. 31
19. Hawriluk R J et al. *Plasma Phys. Contr. Nucl. Fus. Res.* Vol. 1 (Vienna: IAEA, 1994) p. 11
20. Wagner F et al. *Phys. Rev. Lett.* **49** 1408 (1982)
21. Artsimovich L A, Kartashev K B *Dokl. Akad. Nauk SSSR* **146** 1305 (1962)
22. Artsimovich L A, Shafranov V D *Pis'ma Zh. Eksp. Teor. Fiz.* **15** 72 (1972) [*JETP Lett.* **15** 51 (1972)]
23. Troyon F et al. *Plasma Phys. and Contr. Fusion* **6** 209 (1984)
24. Kadomtsev B B *Fiz. Plazmy* **1** 531 (1975)
25. Connor J W, Taylor J B *Nucl. Fusion* **17** 1047 (1977)
26. Kadomtsev B B *Tokamak Plasma: a Complex Physical System* (Bristol: IOP Publishing Ltd, 1992)
27. Burrel K H et al. *Phys. Fluids* B **2** 1405 (1990)
28. Taylor T S et al. *Contr. Fusion and Plasma Physics* Vol. 18B (Geneva: EPS, 1994) P. I, p. 403
29. Strachan J D et al. *Phys. Rev. Lett.* **58** 1004 (1987)
30. Alikaev V V et al. *Plasma Phys. Contr. Nucl. Fus. Res.* Vol. 1 (Vienna: IAEA, 1985) p. 419