Physics – Uspekhi **38** (10) 1147 – 1167 (1995)

PACS numbers: 42.25.Ja; 42.66.–p

Polarisation physiological optics

N D Zhevandrov

Contents

Abstract. This review is concerned with two interconnected issues: the sensitivity of visual organs to polarisation, on the one hand, and, on the other hand, application of polarisation-optical methods to the investigation of eye media, as well as the possibility, in principle, to use them in ophthalmology. A great number of papers published in different journals on physics, biology, and medicine during many years have been used. To date no reviews on this subject have appeared in the world scientific literature.

1. Introduction

The title of this communication may not seem universally and indisputably acceptable at present. Meanwhile, it approximately and adequately describes the essence of the following review, joining together two generally recognised notions of 'polarisation optics' and 'physiological optics'.

Optical polarisation techniques for studying condensed molecular inhomogeneous and anisotropic media are widely used in physics, chemistry, and biology. This review deals with the application of such techniques to the investigation of ocular media. Taken together, these techniques may serve as one more "delicate instrument for the in-depth study of the living eye", using S I Vavilov's assertion made with respect to the visual method of measuring light flux fluctuations.

The present review has two aspects. One is physical and photochemical mechanisms underlying polarisation sensitivity of human and animal eyes. The other concerns studies on the structure and anisotropy of eye media by optical polarisation techniques (dichroism, double refraction, polarisation and depolarisation during light scattering, ophthalmoscopy with crossed polarisers, observation of directional effect, etc.). These two aspects are interrelated. They will be treated in the framework of optics and partly photochemistry without touching upon purely physiological processes in eye – brain pathway.

Use has been made of material from numerous publications in various physical, biological, and ophthalmological journals over many years, including the classical works of H von Helmholtz and S I Vavilov as well as the relatively rare reports in the Russian language.

Such a review as this can be especially helpful at the time when laser ophthalmology is in the making. I have not come across a similar review in the world literature.

2. Directional effect and polarisation

At first sight, the structure of the eyeball and the retina, its basic component, is rather unusual. Photosensitive terminations of the receptors (cones and rods) do not only lie as far from the entrance site for the incoming light as the size of the eyeball permits but are also turned away instead of facing it. In other words, the eye is made 'the other way round !'. That is how its structure has been described in recent monographs:

"At first sight, the structure of the retina of man and vertebrate animals looks paradoxical. Light-sensitive cells are located in the posterior layer of the retina. Rays of light coming from outside have to pass through a few layers of nerve cells before they reach a photosensitive element. Moreover, the rods and the cones are oriented in such a way that the incoming light falls on their inner segments containing no visual pigment. But this structure does not seem to seriously interfere with the eye's sensitivity to light since both the nerve cells and the inner segments of the photosensitive cells are transparent to the visible light". [1]

N D Zhevandrov P N Lebedev Physics Institute, Russian Academy of Sciences, Leninskii prosp. 53, 117924 Moscow
Tel. (7-095) 135-78-60

Received 23 February 1995
Uspekhi Fizicheskikh Nauk **165** (10) 1193–1213 (1995)
Translated by Yu V Morozov; edited by A Gelbtuch

"In the human eye, photoreceptors are hidden at the back, and light rays have to pass through all other layers to reach them. This may have some as yet unknown important implications; moreover, some animals (e.g. squids) have both the nerve and photosensitive cells arranged in quite an opposite manner". [2]

Thus, many authors are evidently surprised at 'the eye being made the other way round', but none appears to be able to account for this inconsistency. Some believe it to be of no consequence as long as the light eventually arrives at the receptors. Others agree that there may be some biological sense in such a phenomenon but cannot offer a reasonable explanation. The 'normal' eye structure in the squid is a source of even greater confusion making the two different viewpoints seem equally valid.

For all that, physiological optics provides experimental approaches to the explanation of this puzzling phenomenon. In the first place, there are studies on the directional effect using light polarisation. The directional effect was first discovered by W Stiles and B Crawford [3] and has since been referred to as the Stiles–Crawford effect. According to these authors, a ray of light entering the eye through the centre of the pupil is several times more effective in producing a visual sensation than one incoming through the pupillary periphery (Fig. 1) [4]. The effect is more pronounced in light-adapted cone cells at the foveal portion of the fundus, being virtually absent in the rod-lined surfaces of the retina. This effect was confirmed by many workers who used various techniques including flash photometry, with the reference light beam passing through the centre of the pupil and the beam under study at a certain distance from the centre of the same eye. Another method employed for the purpose was that of binocular comparison which allows the visual field of the left eye to be compared with that of the right one by varying the pupil size in the right eye and using the signal in the left eye as a reference.

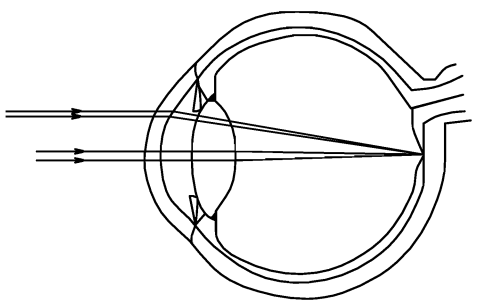

Figure 1. Schematic representation of the eyeball and pathways of axial and non-axial light beams fixed on the central fovea.

Typical experimental results for two subjects are presented in Fig. 2 [5]. Marked on the ordinate is the logarithm of the inverse value of the light flux necessary to produce a continuous visual sensation whilst the abscissa shows linear and angular distances from the centre of the pupil. For example, light passing through the centre is three times as effective as 3 mm from the centre.

This effect cannot be accounted for by light absorption in ocular media. For instance, the most efficient (and most easily damaged) absorbing component, the lens, is thicker in the centre than at the periphery. It was long ago demonstrated that the effect is due to the fact that peripheral light beam reaches the retina at an oblique angle.

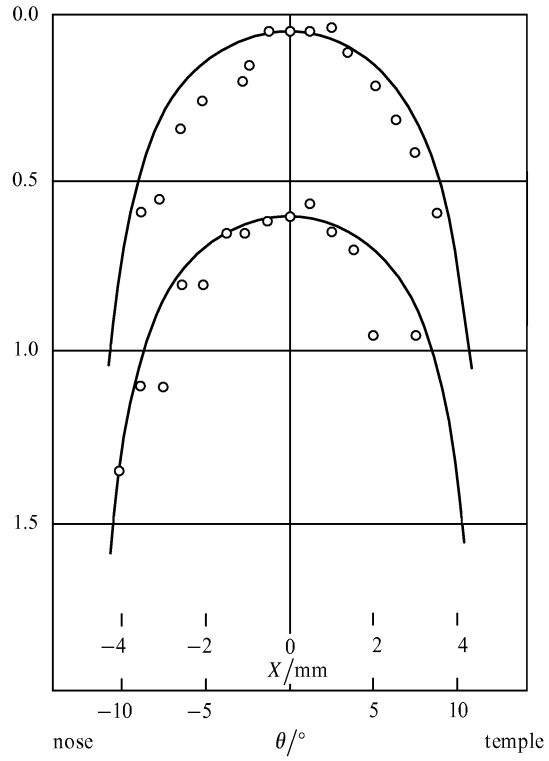

Figure 2. Directional effect.

O'Brien suggested a physical explanation of the directional effect based on the individual cone structure [5]. The light-sensitive end of the cone turned away from the incoming light consists of two sequential cylindrical portions (Fig. 3a): an inner (AB) and an outer (CD) one, the diameter of the former being around three times that of the latter. The two parts are joined together by an intervening conical (funnel-shaped) isthmus (BC) called the cone-cell ellipsoid. It has long been known that the refractive index of the cone material is higher than that of the surrounding medium. Therefore, this portion serves as a light-guide for a beam that propagates along the cone axis (Fig. 3b). The axial beam at points B and C′ (solid arrow) experiences total intrinsic reflection from the inner portion, and all the light enters the outer segment containing photoreceptors. In the case of an oblique beam entering at an angle to the cone axis (dashed arrow), there is no total intrinsic reflection at points B and C, and part of the light

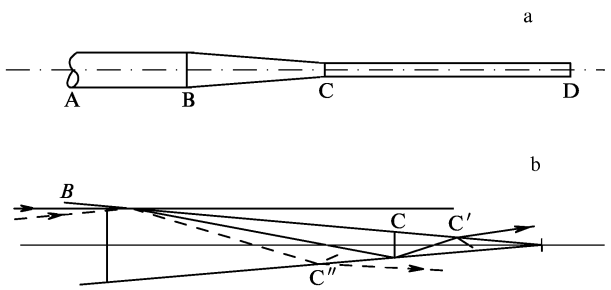

Figure 3. Cone light-guide model.

flux escapes to the environment to be lost for vision. Therefore, a physiologically active axial beam produces a highly intensive light flux in outer segments of the cones where concentration of visual pigment can be minimal. The 'economy' amounts to four orders of magnitude.

All this may account for the advantage of 'the-other-way-round' organisation of the eye and may have important implication for visual acuity, image formation on the retina, and colour vision, the dependence of the Stiles–Crawford effect on light wavelength being a long-established fact. This schematic representation also explains why the Stiles–Crawford effect is absent (or small) in rods in which the inner and the outer segments are of almost equal diameter. The biological importance of sensitivity to the directional effect may also be apparent under different conditions. Thus the effect of diffuse light is decreased at high illumination. Effect of aberrations also decreases with decreasing involvement of pupillary periphery. One may say that cones with directional sensitivity adjust the pupil diameter so that it is different from anatomical. On the other hand, in scotopic vision (at low illumination) where light must be used with greatest efficiency and sharp contours of the image are not necessary, the total area of the pupil is effective since rods do not possess directional sensitivity.

Let us turn now to the problem most interesting in the context of our survey, that is the problem of the relationship between directional effect and polarisation of light. This problem has for a long time been the subject of experimental studies. Barany was the first to investigate it [6]. This author started from the assumption that on going over from the central beam to a peripheral one, i.e. from complete to incomplete reflection, the energy ratio of the refracted to the reflected light beam is likely to depend on the position of the plane of polarisation. Therefore, an observer may be expected to see periodic variations of light flux intensity when the peripheral beam passes through a rotating polariser. The peripheral beam was produced by using a movable diaphragm attached to the cornea by means of a rubber sucker (this resulted in serious damage to Barany's cornea which made him enlist another person to continue the experiment). In order to increase contrast sensitivity, the viewing of a small illuminated field with variable polarisation was carried out against the background of a much bigger surrounding field (screen) with the same, but predetermined, illumination. The experiment gave negative results since no variation of light intensity was recorded at any rotational speed of the polariser.

O'Brien came to the conclusion that quantitation of the anticipated effect was a difficult task, and suggested and experimentally implemented a model for studying the effect of light polarisation on the directional effect [7]. He developed plastic model of the cone-cell ellipsoid with the appropriate geometry and refractive index. The study was complicated by the fact that transparent plastics possess various degrees of birefringence which was certain to bias the results of polarisation experiments. Therefore, the model was made of a transparent isotropic fluid poured into a transparent plastic well with a refractive index smaller than that of the fluid, thus eliminating the effect of birefringence of the plastic material. Schematic representation of the model is shown in Fig. 4. A cylindrical case of lucite (polymeric methyl methacrylate) C has a conical cavity with polished inner walls drilled at the appropriate

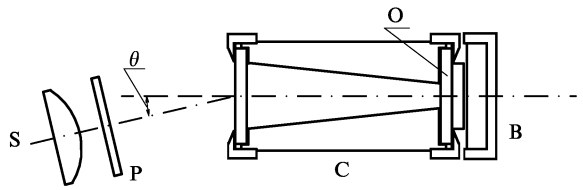

Figure 4. Schematic diagram of the model of cone-cell ellipsoid.

angle to the central axis. It is filled with the aforementioned fluid and firmly sealed with transparent windows O. The well is illuminated by light from source S entering at the desired angle θ to the axis. Polariser P allows the plane of polarisation of the incoming light beam to be rotated. The outgoing light is fed to photoreceiver B. The author took care to eliminate errors due to the effect of polarisation on both refraction and reflection of the light passing through the windows, similar to those that occur in the cornea. In order to cover 'the zone of rational modelling', wells differing in convergence angles, refractive indices, and angles of incidence were made which allowed the total range of possible values for the real eye to be analysed. Sensitivity of the detector was sufficiently high to record a change in the signal as small as a few tens of a percent. In all cases when the plane of polarisation rotated, the signal remained constant to the nearest 1%. Therefore, the anticipated effect was really small and could not be recorded by a human subject in Barany's experiments even under the most favourable conditions.

The role of polarisation of light entering the retina was also examined in later experimental studies. De Groot reported occurrence of a 'transient' increase in brightness perception after a sudden 90° change in the direction of polarisation either in the horizontal or the vertical plane [8, 9]. A fall (relaxation) to the baseline level took a few seconds. The author observed that in the stationary case, the state of polarisation did not influence retinal sensitivity, and the 'transient' effect caused by a sudden change of polarisation was similar to the Stiles–Crawford effect related to the angle at which the incident light enters the retina.

These findings were not, however, confirmed in Ref. [10]. For all special precautions taken to avoid changes in intensity and spectral characteristics of the light (as well as in the position of the beam focused on the periphery of the pupil) due to altered polarisation, these authors failed to detect a 90° change in polarisation (measuring it with 1% accuracy).

Polarisation may be expected to influence the Stiles–Crawford effect as a result of dichroism of disk membranes rather than of complete or incomplete inner reflection in the cone-cell ellipsoid (see Section 4 of the present review) because the incidence of light entering the side of the pupil is not strictly axial but to some extent lateral. However, the shift does not exceed 3°–5° which cannot have any appreciable effect because of dichroism.

Theoretical calculations of the reflected light energy flux in the receptors of the light-guide model reported in Ref. [11] indicated sudden changes near the critical angle and confirmed that the dependence on polarisation of incident light should be very small, in agreement with the experimental findings reported above (Fig. 5). These results were supported by modelling a photoreceptor wave-

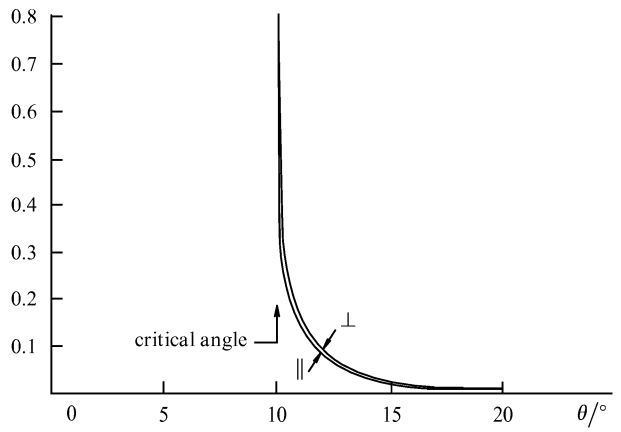

Figure 5. Angular dependence of light reflection in receptors upon orthogonal polarisations.

guide in the form of an infinite thin dielectric absorbing cylinder, with calculations based on the strict Maxwell theory rather than formulas of geometrical optics [12].

The validity of photoreceptor light-guide models was also supported by direct experiments with large models the size of which was greater than the cone size by the same factor as the wavelength [13]. Model 'cones' were made of polystyrene foam. Their dimension was approximately 80 000 times the actual cone size. A klystron oscillator emitting continuous 3.2 cm electromagnetic waves was used. The refractive index of polystyrene foam for this wavelength met the necessary conditions being 2% higher than the refractive index of air. For comparison, Fig. 6 shows a normalised experimental curve for the Stiles–Crawford effect (solid line) and the results obtained with the use of the model in question (circles). The two plots virtually coincide.

So far, the discussion has been concerned with an explanation of the Stiles–Crawford effect in terms of light interaction with a single cone. But a real beam of light entering the retina always interacts with a set of cones. Hence, the problem of anisotropy of such a set has to be considered as well as the degree of its ordering, cone orientation patterns, etc.

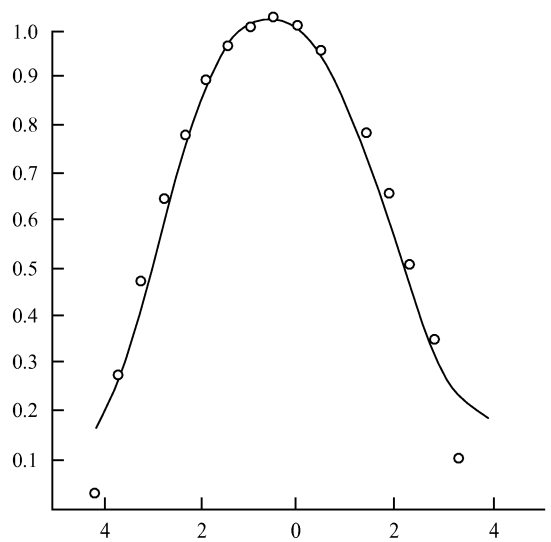

Figure 6. Comparison of observed and calculated directional effects.

These factors were shown to be of primary importance for the quality of the image formed on the retina, because of the similarity of physical mechanisms underlying the directional Stiles–Crawford effect and directionality of light reflection from the retina (see Section 3) and also opn the basis of the light-guide model of the cone structure [14].

A study reported in Ref. [15] has been specially devoted to cone orientation and its importance for the explanation of the Stiles–Crawford effect. The curves of directional effect obtained in experiments were compared with various theoretical curves describing possible distributions of cone orientation (parabolas, trigonometric functions, polynomials of the 4th order, Gaussian curves). Using the least square test, the authors demonstrated that experimental curves obtained for a wide range of angles were in good agreement only with the Gaussian curve whereas for a narrow angle range, i.e. near the pupil centre, the experimental curves could be equally well approximated by the Gaussian curve and the parabola. In plain terms, the problem is not only that the light reaching a given cone from the side of the pupil is 'oblique' (unlike that from the centre of the pupil) but also that individual cones are differently oriented and the incoming light is 'oblique' with respect to some of them owing to their specific orientation. Therefore, the Stiles–Crawford effect results from both the specific response of individual cones and the Gaussian distribution of their orientations.

O'Brien [13] analysed the importance of both the directional effect and the cone light-guide model for what he believed to be the most crucial functional property of the central retina, that is visual acuity (resolution) or the ability to distinguish fine details of the image. Interestingly, he used in his experiments the so-called 'ballistic stimulation' with light pulses of 10 μs duration to eliminate the effect of eye movements. The study was focused on the fovea, the central part of the retina, where only cones are present. Moreover, the foveal cones are much thinner (2 μm in diameter) and more densely packed (the centre to centre distance between adjacent cones is around 2.3 μm) here than in the rest of the retina. The author concluded that the eye resolution would have been degraded because of the spread of light rays before and after focusing had it not been for the protective effect of the light-guide mechanism operating inside each cone. This inference is in agreement with the well-known fact that the resolution is especially high when the pupil is small.

Such is the second biologically important implication of the directional effect which is as important as the 'economy' of photosensitive pigment described above.

3. Polarisation of light reflected from the fundus

Studies on retinal reflection characteristics are of interest in that they contribute to the understanding of image formation on the retina and visual acuity (resolution) and provide information on the structure of the retina and the properties of its different layers. Polarisation patterns of reflected light are also an important source of information.

Such studies on living human eyes have been reported in Refs [16, 17]. They showed the presence of two components of the reflected light, one retaining a significant degree of

polarisation (up to 80%) and the other depolarised. The authors postulate that the former component is reflected mirror-like from one of the membranes of the retina whereas the latter one is the result of Lambertian scattering on disordered layers resembling choroids. These researchers also examined the dependence of these effects on both the pupil size and the light wavelength. However, these polarisation effects in the living eye are complicated and masked by depolarisation in the case of forward and especially backward light propagation through the ocular media owing to scattering by these media and the effect of birefringence in the cornea [18].

For this reason, a more specific investigation was carried out on isolated frog retinae reflecting polarised and unpolarised light [19]. In these experiments, the angle range of reflection could be significantly widened because it was not limited by the presence of the pupil. The study was focused on partial polarisation of the reflected light when the incident light was not polarised and partial depolarisation of linearly polarised incident light. Both effects showed strong dependence on the angle of reflection. Experimental data can be interpreted as resulting from different reflection and scattering properties of the retinal layers of receptors and ganglion cells. The retina was illuminated by either polarised or unpolarised light, the reflected light passed through an analyser and was detected with a photomultiplier which could be moved on a semicircle around the retina in the plane of incidence. The viability of the retina placed in a Ringer solution was continuously monitored by electroretinography. The results of the measurements were interpreted with account taken of the light scattering capacity and other optic properties of the solution. $I_{||}$ and $I_{\perp}$ are the intensities of the reflected light components whose electric vector either lies in the plane of incidence or is perpendicular to this plane.

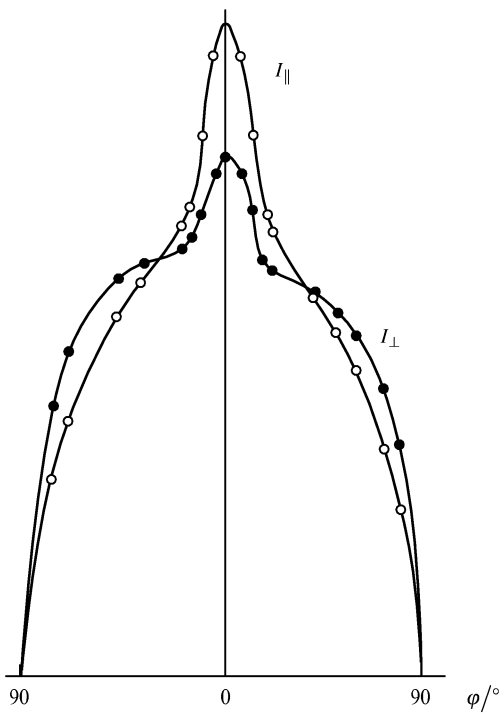

Figure 7. Reflection of unpolarised incident light from the retina.

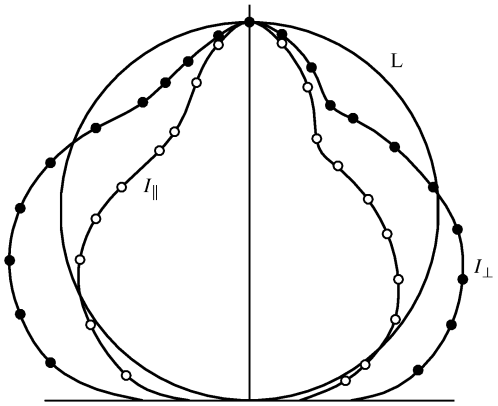

Figure 8. Comparison of polar diagrams of orthogonal reflected components with Lambertian scattering (retinal polarisation effect) for unpolarised incident light.

Fig. 7 shows dependence of these components on the angle of reflection with the retina illuminated by unpolarised parallel light of normal incidence. Fig. 8 compares both normalised components in the polar coordinates with the diagram of Lambertian scattering L. At small reflection angles ($-20° < \varphi < 20°$), both light components (especially $I_{||}$) exhibit a strong backward reflection. At larger reflection angles, $I_{\perp}$ is dominant. At $\varphi \approx 30°$, the value $Q = I_{||}/I_{\perp} = 1$ is reached which corresponds to unpolarised reflected light. Similar measurements were made for the oblique incidence of unpolarised light.

Measurements performed with plane polarised incident light showed that its electric field vector was either parallel or perpendicular to the incidence plane. The reflected light was recorded with an analysing filter oriented either parallel or perpendicular to the polarising filter in the incident ray. The reflected intensity component which retained the state of polarisation was denoted by P, the one that changed by D. Fig. 9 shows retinal reflection characteristics for normal incidence of light with $V = P/D$ plotted as a function of the angle of reflection φ, for incident light polarised parallel to the plane of incidence (||) and for that polarised perpendicular to this plane ($\perp$). This ratio V may be used as a

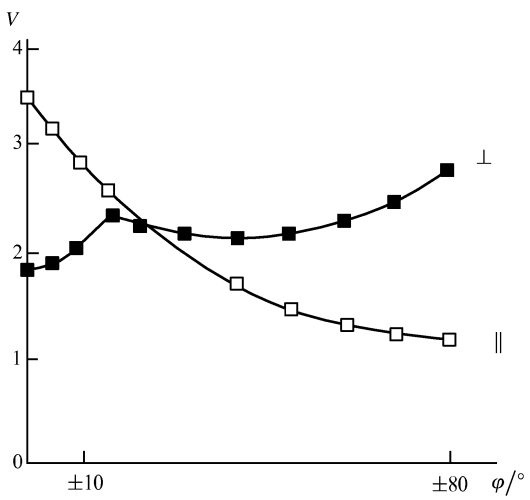

Figure 9. Reflection of linearly polarised light from the retina.

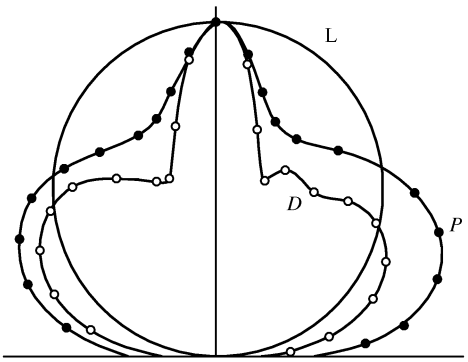

Figure 10. Polar diagrams of polarised (P) and depolarised (D) reflection components for polarised incident light and Lambertian scattering (L).

'measure of the retention of polarisation'. It changes in opposite directions with the reflection angle for the two different orientations of polarised incident light. However, there is an overall decrease in the degree of polarisation with increasing angle of reflection, the intensity of the reflected light being higher for (||) than it is for ($\perp$). This has already been reported in earlier papers for the living human eye. Fig. 10 represents these data as a normalised polar diagram. Again, the deviation of all components from the Lambertian characteristic is evident. Changing the angle of incidence has a strong effect on the form of the reflection characteristics of all the components. The opposite variation of V for the two orientations of polarised incident light can be clearly seen. For large φ, V increases with increasing φ in both orientations. Prolonged retinal exposure leads to bleaching and changes in the degree of reflection.

In the first place, these experiments have demonstrated that the isolated frog retina provides a good model for studying reflection properties of the human retina since polarisation and angular variations of the reflected light appear to be qualitatively similar in both cases. Furthermore, the experiments with isolated frog retina devoid of pigment epithelium and underlying tissue layers (sclera, etc.) have demonstrated that depolarisation effects do not take place exclusively behind the retina; rather, these findings indicate that the preservation of polarisation is an intrinsic property of the retina, and a considerable amount changes in the state of polarisation of the reflected light occurs in the absence of the sclera and pigment epithelium.

Comparison of these data with those reported from a study on the living eye [20] revealed that they essentially agree in that the component retaining polarisation is reflected from a thin film or membrane (the outer boundary tunic) whereas the depolarised component is reflected from a thick layer adjoining the cornea. Concurrently, it was shown that the component retaining polarisation is reflected from a retinal layer coincident with the plane where the image is subjectively sharp [20].

Such a coincidence can hardly be random. Additional studies of the angular dependence of the polarised component revealed that the layer in question lies in the plane containing terminal parts of the outer segments of photoreceptors. It can be inferred that the processes described are closely related to the Stiles-Crawford effect and the light-guide model of photoreceptors.

Polarisation reflexometry of the fundus was further used in the studies reported in Refs [21–24]. Retinal reflection of polarised light of different wavelengths and different pupil sizes was examined by Charman [21]. He considered the effects of birefringence in ocular media (cornea and lens). The results confirmed the presence of two reflected light components, one retaining polarisation and the other undergoing depolarisation. The method used was essentially intended to compare data for the living and the 'model' eyes. In the latter case, the retinal analogue was a flat surface covered with fine-crystal MgO serving as a light-diffusing reflector. The author found that the light component retaining polarisation is reflected from the inner boundary membrane (i.e. the retina–vitreous body interface) whereas the depolarised component results from the light passing through the retina and entering the choroid, the vascular membrane of the eye, where light scattering occurred followed in succession by diffuse reflection from the sclera, travelling back through different retinal layers, and leaving the eye through the pupil. The author emphasises the necessity to take into account dichroism of macular pigment which plays an important role in the formation of Haidinger's brushes (see Section 5). The overall effect is a shift to the red end of the spectrum of the light fraction reflected from the anterior portion of the retina. In the conclusion, ophthalmoscopic techniques based on the selective use of polarisation and specific wavelengths are recommended for visualising some intra-ocular structures.

In a series of papers by Van Blokland, it was shown that the simple polariser–analyser scheme is not sufficient if polarisation studies of retinal reflection are to be conducted, because light scattering can affect polarisation in a most unusual manner. Moreover, the presence of doubly refractive structures in both the cornea and the lens is likely to produce elliptic polarisation of the incoming light beam before it is scattered. This effect may be misinterpreted as a partly depolarised state by the above simple scheme. The author proposes a modified ellipsometric technique which allows modulation of the state of polarisation of the incoming light and estimation of the Stokes vector for the outgoing light, thus providing for the complete description of the state of polarisation. Changes of this state are interpreted with the use of the Poincaré sphere.

The results of the study indicate that almost 90% of the degree of polarisation of the incoming light is preserved after the light passes twice through the eye media and is reflected from the retina. The type of change in the state of polarisation of the totally polarised component depends on linear birefringence. Important technical features of the experiment included separation of the incoming and outgoing light beams in the plane of the lens (by means of mirrors) and creation of a small illuminated retinal field. This ensured minimal overlapping of the two beams inside the eye and the predominance of the retinal effect in resulting scattering characteristics.

Angular dependence of the retinal light scattering and polarisation was examined in Ref. [23]. The measurements were performed for the central and two peripheral positions of the entrance pupil and nine positions of the exit pupil on a horizontal meridian. Both the wavelength and the extent of bleaching were also varied. Only λ was found to substantially affect polarisation. The maximum degree of polarisation was recorded in the fovea at $\lambda = 514$ nm, at the

central position of the entrance and exit pupils and an unbleached retina. Polarisation was almost invariant with respect to the angles of incidence and reflection, but the existence of a directional and a diffuse component in the reflected light was concurrently demonstrated. The directional component was oriented towards the centre of the pupil, and was only observable with the central position of the entrance pupil while its magnitude was inversely related to the density of the visual pigment. The diffuse component was apparent with all positions of the entrance pupil and showed weak dependence on the visual pigment density. Polarisation was preserved in both components. The wavelength dependence was strikingly similar. Because of this similarity, the author hypothesised that the light scattering by the retina takes place mainly at a single layer, most likely the pigment epithelium. The directional component travels backward along the receptor as in a light-guide. Therefore, a sort of the inverse Stiles–Crawford effect takes place. The remaining light yields the diffuse component; implying leakage of a significant amount of light between the outer segments of the photoreceptors. Directionality was not observed in the peripheral retina, in agreement with the weak Stiles–Crawford effect in this zone.

Another paper by Van Blokland [24] deals with light scattering by the human fundus *in vivo* and assesses the directionality and alignment of foveal photoreceptors. This study is related in physical terms to similar experiments on the Stiles–Crawford effect.

The method used by Enoch and Hope [25] is essentially that of comparison between angular scattering diagrams obtained by objective methods and diagrams of the Stiles–Crawford effect measured by the 'psychophysical' approach. However, a correct comparison with the Stiles–Crawford effect should be based on the knowledge of the primary mechanism underlying light absorption by the visual pigment. Therefore, rather than using scattering diagrams, the comparison was made between absorption diagrams obtained by subtraction of scattering diagrams of the unbleached state from those of the bleached one.

An important qualitative result of these experiments is the good agreement between the experimental data obtained in both cases and the Gaussian function of alignment distribution of foveal receptors.

4. Dichroism of photoreceptors

Rhodopsin, a photosensitive visual pigment absorbing light admitted by the eye, is a complex protein [1, 26]. It consists of a proteid portion, opsin, and a chromophor group, retinal, in the form of structurally different *cis* and *trans*-isomers. Only one of these isomers, 11-*cis*-retinal

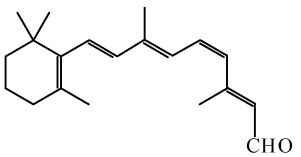

displays steric correspondence to the retinal binding site on the opsin molecule and binds to it to form a stable complex. In rods and cones, retinal is associated with different opsin molecules. Cones, in turn, contain three opsin species which accounts for individual cones absorbing light of different wavelengths and thus provides the basis for colour vision. The rod pigment is called rhodopsin while pigments in cones are referred to as iodopsins. Retinal forms a light-sensitive element in the eyes of all animals including molluscs, arthropods, and vertebrates, for all the difference in their evolutionary pathways. Living organisms are able to synthesise retinal from readily available substrates including carotenes. *cis*-Retinal is chemically stable and does not undergo isomerisation to *trans*-retinal in the dark. Light absorption results in activation of the *cis*-retinal molecule and its conversion to *trans*-retinal.

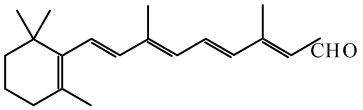

As in all other organic molecules with conjugated chains of alternating single and double bonds, the oscillator of absorption in retinal is oriented along the chain. Hence, the marked dichroism of the retinal molecule.

Following formation of the *trans* isomer, the steric affinity of the chromophor group for opsin is lost, and the protein molecule undergoes a series of conformational changes giving rise to a number of derivatives, each known under its own name, e.g. batorhodopsin, lumirhodopsin, metarhodopsin, etc. Photoconversion of the rhodopsin molecule induces an electric reaction of the receptor cell, with ion transport across the cell membrane playing a major role in maintaining the response. This causes the *trans*-retinal/opsin complex to split in consequence of the loss of steric correspondence between its two components. Dissociated *trans*-retinal undergoes back conversion in a different site inside the cell and the resulting *cis*-retinal binds to opsin. The reconstituted rhodopsin molecule is then again capable of absorbing light.

One of the most remarkable properties of retinal receptors is their unusually high photosensitivity. Even if only one rhodopsin molecule out of millions contained in dark-adapted rods absorbs a photon of light, it immediately sends a discrete signal to the nervous system. This naturally raises the question of the physical mechanisms underlying transport of such signals.

Light polarisation techniques were employed to study the role of radiationless migration of excitation energy [27]. This phenomenon has long been known to occur in molecular crystals and concentrated dye solutions and has been studied to a large extent with the use of the same polarisation techniques (polarisation of luminescence and dichroism [28–31]).

The role of migration of excitation energy between chromophors of rhodopsin was investigated by Hagins and Jennings [27] by three different approaches: (i) evaluation of photodichroism of rod rhodopsin, (ii) examination of concentration-dependent depolarisation of fluorescence in a vitamin A solution (vitamin A being closely related to rhodopsin in terms of chemical structure), and (iii) study of fluorescent area diffusion in isolated rods excited by ultraviolet light in the form of an image of a narrow slit.

Photodichroism was measured in suspensions of outer rod segments from frog and rabbit retinae in a sucrose solution as well as in intact enucleated rabbit eyes.

Photodichroism is dichroism induced in an isotropic medium preliminarily illuminated by bleaching polarised light which produces a selective orientational effect responsible for induction of anisotropy in the medium. The anisotropy is identified from changes in dichroism of the probing light beam. A xenon flashtube served as a source of bleaching light whereas an ordinary electric bulb was used to produce the probing beam. Dichroism was determined from modulations of the light flux generated by the electric bulb; the modulations were induced by a rotating polariser interposed in the light beam. Time resolution of the experimental set-up ranged from 10 to 100 μs. Control experiments were designed to eliminate or evaluate the depolarisation of flashes of light in the eye media.

The experiments revealed a small degree of photodichroism (around 2%) in suspensions and its complete absence in the intact retina. This finding can probably be accounted for by the fact that, in the rods of the intact retina, the light propagates axially whereas in chaotic suspensions a sufficiently large amount of rods fire in the direction perpendicular to their axes, giving rise to dichroism. Nevertheless, there are reasons to expect induction of dichroism in the intact retina as well. The authors attempted to explain its absence by radiationless migration of energy between differently oriented molecules of visual pigment. To support the hypothesis, they had to conduct fluorescence experiments.

Polarisation of fluorescence of vitamin A in an ethanol solution was measured at −100 °C to eliminate rotational depolarisation. Comparison of measured concentration-dependent depolarisation data with formulas of the Forster theory [28] which are known to take into account fully and very ingeniously all the related parameters brought the authors to the conclusion that energy migration in strong vitamin A solutions is ineffective.

For all that, one can not be quite sure that the migration patterns of vitamin A and its derivative, rhodopsin, are wholly identical. Therefore, the authors designed independent experiments with the object of recording manifestations of energy migration, if any, in rods. They hypothesised that a long-range energy migration must result in bleaching a bigger rod segment than the one directly illuminated by the incoming light. Illuminated frog and rat retinae convert rhodopsin to orange metarhodopsin which undergoes rapid transformation to a stable yellow substance with the absorption maximum at 360–400 nm. Concurrently with the formation of this product, yellow fluorescence of the outer rod segments is observed, which is excited by 405 nm and 436 nm Hg lines, reaching maximum intensity in the presence of air. In fresh preparations, the fluorescence is partly polarised parallel to the long axis of the rods. This line of reasoning brought the authors to the conclusion that spread of the fluorescence area in such fluorescent rods beyond the zone illuminated by the exciting light may be regarded as a direct evidence of long-range energy migration.

A simple experimental setup used in the study provided very high accuracy of measurements. The light from a mercury tube passed through a filter to ensure the choice of the desired wavelength and was focused on a 10 μm slit in the surface of an aluminised mirror. The image of the slit was projected, with high-quality objectives, on isolated rods embedded in glassy sucrose or glucose mounted between two cover glasses. Spherical aberration was reduced to the minimum. The fluorescent image was photographed through crossed filters. The experiment included two rods one of which was parallel and the other perpendicular to the slit. Serial photographs of the first-order diffraction fringe with the half-width of 5 μm (excited at 436 nm) were taken. In no case, the area of fluorescence was found to spread beyond the illuminated zone. In other words, there was no evidence of excitation energy transfer over a distance comparable with the rod-size. Taken together, these observations were considered to indicate that radiationless migration of electron excitation was not an essential component in the physiological mechanism of rod excitation while the absence of retinal dichroism was ascribed to the unrestricted freedom of rhodopsin rotation in the rods with microsecond relaxation time.

The conceptual strategy of this early work was further developed in a series of studies later conducted by different authors. For example, Tao measured fluorescence [32]. He observed light-induced conversion of rhodopsin to a fluorescent derivative, *N*-retinal opsin, in the presence of sodium borohydrate. Other methods of obtaining fluorescent derivatives of rhodopsin were employed in Refs [33] and [34]. On the basis of changes in the decay of fluorescence anisotropy (a parameter uniquely related to the degree of polarisation) some authors assessed the order of time for rhodopsin rotational relaxation in outer rod segments. Rotational diffusion turned out to be of nanosecond duration — several orders of magnitude faster than it could be predicted from the rough measurements reported in [27].

Japanese authors described measurements of photodichroism in the frog retina and demonstrated changes in the orientation of absorbing oscillators during photochemical rhodopsin transformation to batorhodopsin and isorhodopsin [35]. The angles with the rhodopsin oscillator in the plane of the disk membrane were found to be 20° and 17° respectively. The preparations were previously fixed in glycerol at liquid nitrogen temperature to eliminate Brownian rotation. The wavelength of the bleaching light was fixed at 437 nm, and photodichroism was measured at 640 nm, the light of this wavelength being absorbed only by batorhodopsin. On the basis of their findings, the authors proposed to use changes of photodichroism as a measure of the amount of photoderivatives produced on bleaching. Specifically, they found that isorhodopsin was stable at room temperature while batorhodopsin was not.

Owing to intrinsic properties of anisotropic media, they exhibit both dichroism and birefringence. Birefringence of the outer segments of rods in the retina was first described by Schmidt [36]. This finding was later exploited in a study of structural changes in outer segment membranes, similar in design to the dichroism experiments described earlier [37]. Such a 'cross-examination' approach greatly contributes to the reliability of experimental findings in optics. Structural changes in the membranes were examined with reference to metarhodopsin-2 formation in the intact frog retina. Control experiments with the use of retardation plates showed that the effect was due to altered birefringence and not to absorption, optical rotation, or changes in light scattering patterns. Simultaneously, the dependence of experimental results on spectral characteristics was evaluated. Analysis of the results revealed that changes in birefringence amounting to 1% and associated with impaired lipid crystallisation in the outer segment membrane could be caused by the change in orientation of a

single phospholipid molecule during rhodopsin bleaching. This confirms high sensitivity of the method used to observe structural changes.

Intrinsic dichroism of outer segments in retinal photoreceptors has been examined in numerous studies [38–43]. Their most important result is the absence of dichroism when the incident light is parallel to the axis of either a rod or a cone whereas dichroism is pronounced in rods and cones illuminated perpendicularly to their axes: absorption of light with the electric field vector perpendicular to the long axis of the rod is approximately 6 times that of the light with the electric vector parallel to the long axis. The oscillator of absorption lies in the plane of the light-absorbing 11-*cis*-retinal molecule which is supposed to be flat. Hence, the plane of the rhodopsin molecule partially or completely coincides with that of the disk membrane. Orientation in this plane is chaotic. There is no doubt as regards the validity of this inference. However, dichroism in this plane can be just as well evoked by previous bleaching with polarised light.

Evoked dichroism was investigated in many studies, which yielded interesting data on membrane properties and structure. Pak and Helmich [44] detected photodichroism using electroretinograms in frog retinal preparations fixed in solid media and cooled to −10 °C to eliminate Brownian rotation. This study failed to reveal photodichroism. Similar photodichroism measurements were made with optical detectors in the bovine retina at liquid nitrogen temperature to eliminate Brownian rotation [40]. This study became feasible after the demonstration that the first bleaching product of rhodopsin, prelumirhodopsin, was stable at this temperature and that the absorption spectrum of this pigment was shifted appreciably to the red. Precooled retinal preparations were irradiated with the plane-polarised 436 nm or 549 nm mercury light. The wavelength of the probing beam was chosen as 578 nm because at this wavelength, there was a most striking spectrum difference between rhodopsin and prelumirhodopsin. The observed time-related changes of photodichroism as a function of bleaching light exposure provided information about equilibrium concentrations of the primary substrate, rhodopsin, and its photoconversion products, prelumirhodopsin and isorhodopsin. The results obtained are in good agreement with those found independently for vitamin A contained in bovine rods [45].

Cone [46] obtained quantitative data for the decay of photodichroism and found that the rate of decay provides a direct measure of the rotational relaxation time of rhodopsin in the receptor membrane. Cone employed a pulsed neon gas laser as a source of the bleaching flash and a xenon flashtube for the light used to measure changes in absorptance. He found that rhodopsin in the freshly isolated frog retina occurred with a relaxation time of about 20 μs which was shown to correspond to the viscosity of the membrane medium (approximately 2 P). This value is comparable with that for the viscosity of olive oil. This implies the membrane is liquid. Also, the author emphasised the important role of rotational diffusion of membrane rhodopsin in the processes controlling ion transport across the membrane. This may be crucial for the understanding of mechanisms underlying conversion of visual sensation to neural impulse.

Another paper by the same author [47] provides experimental evidence of translational diffusion of rod rhodopsin perpendicular to rod axes. Data on viscosity encountered by rhodopsin in this study have been shown to agree fairly well with those obtained from the rotational diffusion experiments.

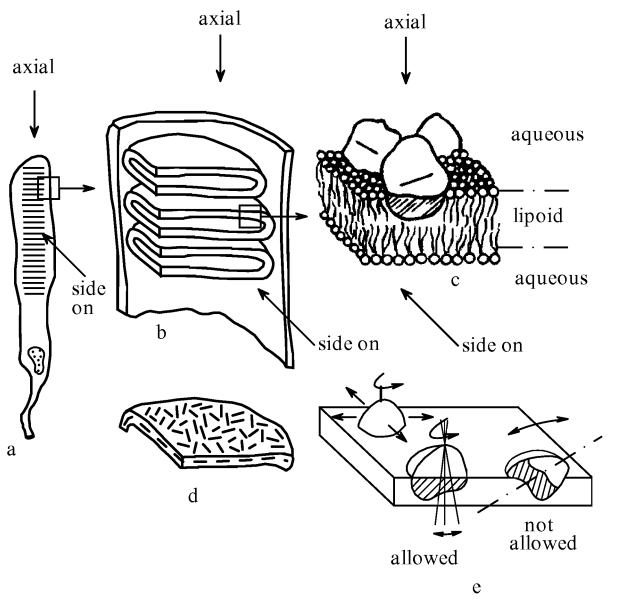

Figure 11. Schematic representation of the membrane structure in rod outer segments of the retina.

Let me now try to summarise ideas reported in Refs [41–43] on the structural and molecular organisation of photoreceptor membranes in rod outer segments derived from optical light polarisation studies (on dichroism and birefringence) and found to be in agreement with the results obtained by different methods including electron microscopy. The membrane structure as seen in axial and lateral light is schematically represented in Fig. 11, where b represents membrane disks and c the liquid model of a membrane disk; rhodopsin molecules are globular proteins partly embedded in the double lipoid layer; the hydrophilic part of the protein (light) penetrates into the aqueous phase while the hydrophobic part (shaded) is deeply embedded in the membrane; chromophor oscillators (solid lines) are more or less parallel to the membrane surface; d is a schematic representation of the chaotic orientation of molecular oscillators in the disk; e illustrates the freedom of translational and rotational movements of rhodopsin molecules in the liquid matrix which are strongly restricted by the ratio of hydrophilic to hydrophobic forces. This scheme provides a qualitatively adequate interpretation of all experimental data on dichroism, photodichroism, and birefringence in the membrane and illustrates the feasibility of measuring its viscosity. Quantitative differences normally inherent in the results of light polarisation studies at the molecular level may be accounted for by incomplete linearity of oscillators, fluctuations of orientation, etc. It should be emphasised that the above scheme takes into account the so-called form dichroism of the stacks of membrane disks, in addition to the intrinsic dichroism of individual disks.

Optical anisotropy (birefringence and dichroism) can also occur in a collection of isotropic bodies if they are organised in an ordered system [48]. An example of such a system is provided by a periodically repeated series of

parallel thin isotropic plates whose width is smaller than the wavelength. Periodic patterns of plate refractive indices (n_1) and intervals (n_2) cause the stack (or the pack) of plates behave like a monoaxial negative crystal, and light passing through the stack undergo birefringence called birefringence of the form (or form birefringence). A similar system of identical thin isotropic pivots arranged parallel to one another behaves like a positive monoaxial crystal, with its optic axis of parallel to the axes of the pivots.

Likewise, it appears relevant to introduce the notion of form dichroism with respect to light-absorbing plates or pivots as opposed to transparent ones. Specifically, form dichroism is observable in stacks of membrane disks in rod outer segments. It has been calculated that if the intrinsic dichroism amounts to Δ, total dichroism, including form dichroism, is 1.6Δ.

Changes in birefringence as a function of light wavelength provided information on structural changes in rod outer segments (lipid configuration) [41]. Specifically, the effect of the rhodopsin sinking deeper into the membrane after bleaching was studied together with the axial birefringence gradient in the rod outer segment. The spacing in bleached rod outer segments was shown to be close to 15 nm at the base while only around 5 nm at the tip. Such changes are likely to be associated with impaired lipid alignment in membranes.

5. Polarisation entoptic phenomena

The human eye is a very sensitive optical instrument. It is capable of perceiving and distinguishing light intensities in a very broad range, from billions of photons to a few photons. Simultaneously, the eye recognises hundreds of different hues. Humans use their eyes to obtain information about three-dimensional objects and their relative location in space.

It is less widely known that an unaided human eye is equally able to respond to polarised light. This is small wonder because polarisation sensitivity of the human eye is by no means comparable with its spectral sensitivity and brightness perception. The human eye does perceive polarised light but only to a very small extent.

Haidinger was the first to discover the ability to perceive polarised light with an unaided eye in 1844 [49]. An observer looking at a uniform field illuminated by plane polarised white light can for a few seconds see an obscure pale-yellow figure against blue background. The outline of the figure is that of a stack of hay with broadened ends. Papers in the German language refer to it as 'Buschel' whereas English-speaking authors call it 'brushes'. The universally accepted name in the scientific literature is Haidinger's brushes. The axis of the figure is perpendicular to the direction of polarised light. A 90° change in the electric vector direction does not prevent Haidinger's brushes from being seen by the observer, but they rotate by the same angle. The contrast of Haidinger's brushes is improved in a blue-light illuminated field. They can even be seen in partly polarised light, for example against the blue sky.

A similar phenomenon was many years later observed by Shurcliff for circularly polarised light [50]. Looking at a clear or a cloudy sky through a right-handed rotating polariser allows an observer to see normal Haidinger's brushes pointing downward from right to left. The position of Haidinger's brushes does not change when the polariser rotates around its own plane. A left-handed rotating polariser yields Haidinger's brushes directed downward from left to right. By varying the azimuth of a linear polariser it is possible to obtain Haidinger's brushes oriented exactly as they are in a circular polariser.

In 1940, Neuberger described one more entoptic phenomenon occurs in polarised light [51, 52]. He observed a network of interfering fringes using a linear polariser and Savar's plate (without an analysing filter !). The fringes could be seen much better through a blue filter. The symmetry axes of the interference picture were found to coincide with those of Haidinger's brushes whereas its contours corresponded to the transition sites from one system of fringes to another, complimentary one.

Doubtless, all the above phenomena are due to the common cause, that is the presence of a natural analyser in the eye. The possible structure of such an analyser was first considered by Helmholtz [53]. He suggested that the analyser makes use of the dichroism of radial threads (Muller's fibres) located near the macula and coloured yellow with the macular pigment, lutein. Dichroism is a result of an ordered rather than a chaotic distribution of anisotropic molecules of the yellow pigment over the radial fibres. Analysis of Haidinger's brushes suggests that the macular oscillators of absorption should be oriented perpendicularly to the radial fibres to give rise to the so-called 'radial polariser' schematically represented in Fig. 12.

It should be mentioned that eye studies normally pertain to two different types of dichroism: (i) the dichroism of absorbing filters (i.e. the yellow pigment that serves as a screen for the central part of the retina including fovea) and (ii) the dichroism of rhodopsin in the outer segments of photosensitive receptors (see Section 4). The following discussion concerns type (i).

If the oscillators of the yellow pigment molecules are oriented perpendicularly to the fibres which spread radially from the fovea and the incident light is polarised in the direction shown by the arrow, the light passing through such a filter is reduced in intensity in the sector limited by the straight dashed lines (Fig. 12). With blue illumination the eye then perceives two dark sectors in the central part of the visual field. When the incident light is white, these two sectors are yellow, by contrast. It is in this way that these sectors form Haidinger's brushes.

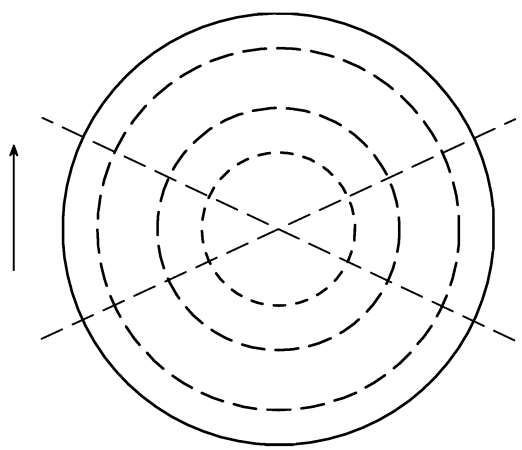

Figure 12. Schematic representation of a radial polariser.

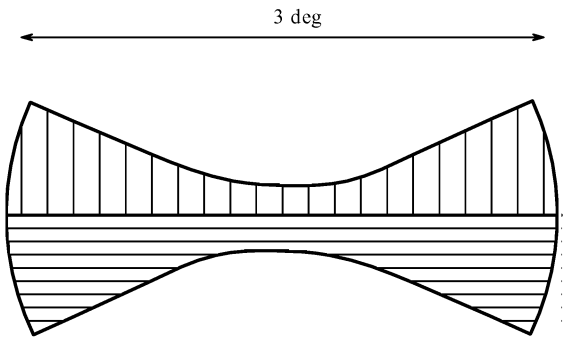

Figure 13. Test field for examining dichroism of the yellow pigment.

In order to enhance the effect, De Vries et al [54] used a test field (Fig. 13) the shape of which ensured that only that part of the retina was illuminated where molecules of the dichroic pigment are parallel, that is bounded by the dashed lines in Fig. 12. This approach allowed dichroism to be measured quantitatively. The test field was divided into two halves, each illuminated by the light of the same wavelength polarised in mutually perpendicular directions. The observer was asked to readjust the preestablished brightness match between the two fields when the planes of polarisation of both components were simultaneously turned through 90°. Dichroism was measured after the brightness match was photometrically restored. The effect was maximal at $\lambda = 460$ nm. Similar experiments carried out by this method with the light circularly polarised in opposite directions led to the match between the two test fields being upset on simultaneous inversion of circular polarisation. This finding provides direct experimental evidence that birefringence, along with dichroism, plays an important role in the entoptic phenomena described here. This was to be expected because both dichroism and birefringence are known to be intrinsic properties of anisotropic media. The thing is that media possessing birefringence transform circularly polarised light into elliptically polarised one whereas the dichroic element exhibits differential response to the elliptically polarised light, depending on the orientation of the ellipse. The importance of double refraction of ocular media was demonstrated already in the early work of Boehm [55].

Boehm studied Haidinger's brushes in linearly, circularly, and elliptically polarised light using phase lag plates and compensators. He discovered that retinal structures contained a phase lag plate analogue at $\frac{1}{8}\lambda$ but failed to associate it with a specific structure. Boehm confirmed his finding when he studied new entoptic phenomena found by him to occur in polarised light. They are currently known as 'peripherally polarised figures', which are observable at the side of the retina (up to 12°) and appear to be unrelated to the macular pigment. These figures exist regardless of the light wavelength and can be observed in both linearly and elliptically polarised light, although they disappear as the light becomes circularly polarised. Boehm believed their source to be selective scattering of the linearly polarised light in all retinal layers, which in this case serve as 'an opaque medium'. Such selective scattering at the concave retinal surface produces the impression of light, rather than uniform illumination, the shape of which is reminiscent of a stack of hay.

De Vries et al. [54], using the same method, confirmed the role of birefringence and revealed the position of the main axis of a doubly refracting structure. For the left eye, it forms an angle of 32° relative to the horizontal line and pointing downward in the direction of the nose. Similar measurements for the right eye showed a symmetrical situation. There was no correlation between birefringence and dichroism measurements which suggests their different origin. According to the authors, the spectral distribution of the Haidinger effect is identical with the absorption curve of the macular pigment.

Brumberg and Feofilov [52] demonstrated that Neuberger's phenomenon, similar to Haidinger's brushes, can be wholly accounted for on the basis of the Helmholtz hypothesis of a radial analyser in Muller's fibres anisotropically coloured yellow with the macular pigment.

Further attempts to find an adequate explanation for entoptic polarisation phenomena (in the first place, Haidinger's brushes) required extensive studies some of which it is appropriate to review in the chronological order.

The interest in physiological optic research with polarised light has remarkably grown since polaroids — relatively cheap light-polarising materials with a large area — became available as a substitute for the more expensive and rare polarisation prisms. An example of studies using such materials is provided by the paper by Cogan [56] who studied polarisation effects in the lens and the outer segment of the intact eye. An isolated lens placed in a saline solution was examined between crossed polaroids. The lens appeared divided by two lines into four light quadrants seen against a dark background. The lines formed a dark cross whose arms corresponded to the polaroid axes. The author referred to earlier papers by Brewster [57] and Valentin [58] in which occurrence of the cross had been shown to be common to all vertebrate animals including reptiles and fish. These experiments point to an ordered radial arrangement of lens structure, which is hardly surprising. But later the author drew some analogy between the cross and Haidinger's brushes and arrived at the conclusion that the latter phenomenon might at least in part arise from the lens. A similar dark cross was observed at the iris through an analyser crossed with a polariser which served to illuminate the intact eye. The author ascribed this effect to the radial organisation of corneal structures and emphasised its similarity with Haidinger's brushes.

However, a series of control experiments (including those with lens excision) left no doubt that the true mechanism underlying formation of Haidinger's brushes is different.

Stanworth and Naylor [59, 60] analysed different hypotheses concerning possible sources of Haidinger's brushes. According to these authors, the hypotheses can be categorized into three major types: (i) multiple refraction at interfaces and birefringence in intraocular media, (ii) the presence of a radial analyser in the macular zone, and (iii) the presence of blue-light receptors, i.e. a retinal analyser.

The first group of hypotheses was refuted for the results of a series of control experiments on enucleated eyes, and also by the geometry and spectral properties of the effect. This reduces the choice to the presence of a yellow macular radial analyser in front of the rods and cones and an analyser built up of radially arranged blue-light receptors in the retina itself. In both cases, dichroism and birefringence have to be taken into account.

Difficulties encountered in connection with the Helmholtz hypothesis were discussed in Ref. [59], and it was suggested that blue-light receptors are the most probable intraocular structures that analyse polarised light admitted by the retina. Specifically, such an inference would allow colours of the sectors of Haidinger's brushes to be explained without allusion to colour contrast which had always been considered not wholly appropriate. However, this hypothesis encounters potential objections the main of which is that incident light entering the retina parallel to receptor axes fails to elicit dichroism (see Section 4), and only a small fraction of the light flux is oblique which precludes the development of dichroism. It is just for this reason that directional effect does not show dependence on polarisation.

In their second paper, Naylor and Stanworth [60] cited new and more reliable quantitative data obtained by a technique that used a much smaller retinal test field and allowed both spectral and spatial distributions of the effect to be examined. The authors concluded that light absorption by the oriented macular pigment was the major cause of Haidinger's brushes, although they considered this explanation as incomplete.

Hallden (Sweden) [61] extensively discussed several previous hypotheses and provided arguments against the concept of yellow pigment (believed to permeate by diffusion all retinal structures and to be unrelated to Muller's fibres or Henle's layer). Instead, he suggested a phenomenological model of Haidinger's brushes based upon the interference of polarised light. Hallden used cellulose tapes to construct an aggregate model combination of a radial analyser and a radial phase lag plate (Fig. 14). This model allowed objectively observable figures to be obtained in polarised light corresponding to Haidinger's brushes, in agreement with calculations. The author did not suggest a new anatomical basis of the phenomenon to establish its association with a specific intraocular structure. Nevertheless, an attempt to find an objective analog of subjective perception of Haidinger's brushes appears to be of great interest.

The phenomenological approach was also employed in Ref. [62] where the retina was regarded as an anisotropic opaque crystal in which interference effects in the convergent polarised light resulted in conoscopic figures reminiscent of Haidinger's brushes. The authors argued that in the most general form this model may be applied to the eyes of fish and birds which, some speculate, use polarised light for navigation.

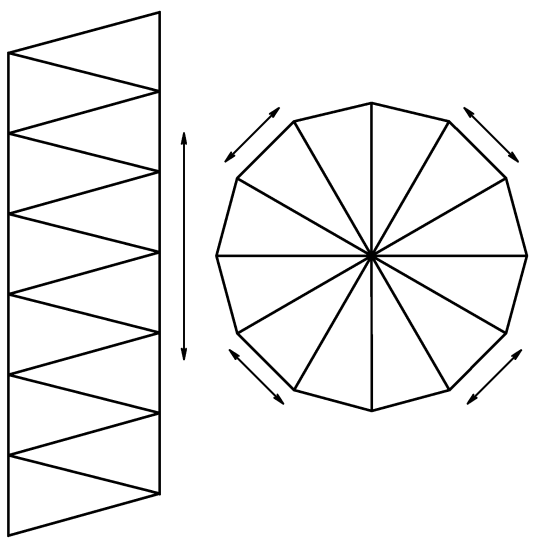

Figure 14. Cellophane model of radial analyser.

A major contribution to validation of the model assuming the involvement of the yellow macular pigment, lutein, was provided by the studies of Bone and Lendrum [63–65]. These authors investigated linear dichroism of lutein in stretched polythene films and demonstrated similarity between absorption characteristics of the macular pigment and dichroism patterns giving rise to Haidinger's brushes. Also, they assessed the importance of corneal birefringence (see Section 6) and made a large number of experiments to confirm that a relatively constant amount of the macular pigment is oriented along radial nerve fibres (ca 10%). In addition, the authors hypothesised on the mechanism and the pattern of lutein uptake by Henle's fibre membranes. In the end, they postulated an important physiological function of lutein within the membrane as essentially that of protection against photooxidation by singlet oxygen.

The study reported by Hemenger [66] also proceeded from the hypothesis of macular pigment dichroism. However, this author used an alternative approach in an attempt to explain the origin of dichroism which disregarded orientation of the pigment molecules. He argued that it is the organisation of the medium in which the molecules are embedded, rather than the pigment molecular structure, that is responsible for form-dichroism the magnitude of which is sufficient for a quantitative description of Haidinger's brushes, provided a major part of the macular pigment is distributed within the Henle layer. Henle's fibres are densely packed and their refractive index is higher than that of the medium between them. Orientation of the pigment molecules is immaterial because, according to the author, there is no direct evidence that it really takes place nor has any acceptable hypothesis been suggested to explain the mechanism of orientation. On the whole, Hemenger's paper is largely concentrated on the quantitative aspect of the effects being studied. The author emphasises that his results agree with those of experiments which revealed 'polarisation cross' on the macula illuminated by polarised light.

These experiments were carried out by Hochheimer and Kues [67, 68] who once again raised the question of the relationship between subjective and objective data on entoptic polarisation phenomena.

Ref. [67] presents retinal photographs taken in rhesus monkeys whose macular area is similar to that in the human eye. The camera accepted rotatable polarisers both in front of the flash lamp and before the film plane. The polarisers were crossed with respect to each other. Photographs show a cross-like figure overlying the macular area. Both the shape and the position of the cross indicate that it may be attributed to the eye structure which gives rise to Haidinger's brushes. The cross-like figure appears on the photographs with better contrast than Haidinger's brushes, probably because the crossed analyser eliminates the reflected light thus preserving initial polarisation (cf with data in Section 3). The cross-like image on polarised light photographs may somewhat differ from what is perceived as Haidinger's brushes because in the former

case, the light can pass twice through the eye polarising media when the photographs are taken. Anyway, there is little doubt that both effects are associated with the radial symmetry of a structure having the axis perpendicular to the retina. It has been shown that the cross-like images could be seen and photographed even after both the lens and the cornea were excised [68]. This confirms the association of the phenomenon under study with the retina. Haidinger's brushes and the cross occupy identical retinal areas, and the former can be seen only by subjects in whom it is possible to take photographs of the polarisation cross.

To summarise, current approaches to the objective fixation and reproduction of Haidinger's brushes provide unequivocal evidence of their physical rather than purely 'physiological' nature, in agreement with an earlier propositioon by Raman [69]. This author developed a new method to study spectrally selective adaptive capabilities of the eye using polarised light which enabled him to observe Haidinger's brushes and their behaviour. He interpreted the results of his study as "pertaining to a physiological phenomenon as opposed to a physical effect". This statement is quite obscure since all physiological phenomena are supposed to arise from molecular processes governed by physical laws. The author seems to have had in mind subjective psychological perception of the observed phenomea meaning that physical laws are of little help in explaining why the 600 nm light causes sensation of red colour in the eye while that with the wavelength of 550 nm produces sensation of green colour and not vice versa.

Fundal photographs were taken in polarised light and the objectively observable figures compared with Haidinger's brushes by Tamarova who also attempted to provide theoretical interpretation of the data obtained [70]. In crossed polaroids, she observed different figures in the macular zone and the peripheral fundus. Those at the side of the fundus had the aspect of a weakly visible cross with the light arms positioned at an angle of 45° to the crossed polaroid axes. It was inferred from this finding that maximal and minimal light intensities in this figure alternated every 45°. The figure observable in the central zone, i.e. in the proximity to the macula, had quite a different aspect. It was composed of two, instead of four, dark beams visible against the light background. The dark beams were oriented parallel to the optical axis of the analyser. Therefore, alternation of dark and light spots in this figure occurred with an interval of 90° instead of 45° as in the former case. Therefore, the correspondence between objectively and subjectively observable polarisation phenomena was incomplete. However, all subjects included in the study could normally see Haidinger's brushes provided the polarisation figure to be photographed was readily observable. The absence of the figure interfered with visibility of Haidinger's brushes. The author calculated two theoretically feasible structural models of the intraocular analyser [70]. One of them suggests the presence of optically anisotropic solid layers, the other that of a single anisotropic layer having the aspect of a lattice-work of alternating anisotropic and isotropic elements. Intensity distribution of the light after it passed through the layers corresponding to the above model was estimated with the use of Muller's matrices described in Ref. [71]. The intervals between the highest and the lowest intensities were found to be 45° and 90° for the former and the latter models respectively. This indicates that the macular analyser has a lattice structure.

In connection with entoptic polarisation phenomena, that is the susceptibility of the human eye to polarised light, it is worthwhile to mention the well-known experimental studies of S I Vavilov on visually observable light quantum fluctuations [72]. Numerous experiments performed by this author included those on fluctuations of mutually perpendicular polarised light beams which revealed that fluctuations of either beam are totally independent. In the present context, it means that the visual threshold is unrelated to polarisation of the incident light.

Entoptic polarisation phenomena as well as retinal effects of polarised light have for a long time been a matter of great interest in terms of their application in medicine. Photographs taken in crossed polarisers have been used to study pathological processes in the nerve fibre layer [73]. The defects found by this technique were associated with early manifestations of glaucoma. This method was reported to be of special value for the examination of arch nodes. Also, evaluation of form-birefringence by ellipsometry and scanning with a laser tomograph allowed the width of the nerve fibre layer to be measured [74].

A number of studies have been devoted to the assessment of diagnostic and therapeutic implications of Haidinger's brushes [75–79]. Position of the axis of Haidinger's brushes depends on the direction of polarisation of the incident light. A rotation of the polariser causes a similar angular rotation of Haidinger's brushes. With a stationary polariser, Haidinger's brushes can be seen for a few seconds after which time they fade away. Photochemical processes in the macular pigment may be considered a very likely factor responsible for this phenomenon, given the validity of its most feasible model. However, Haidinger's brushes become again visible when the polariser is rotated again although they are seen inverted.

Of primary importance for the use of Haidinger's brushes in clinical medicine was to ensure the stability and contrast of the image seen by the patients. This was achieved by using a polariser rotated at an optimal speed of 1–2 rev s^{-1} and a set of blue filters to enhance the contrast. Under these conditions, most of the patients with normal sight, regardless of age, sex, and race, reported seeing Haidinger's brushes consistently in the form of a rotating propeller.

Some of the above papers reported examinations of tens and even hundreds of patients. All the authors emphasise the great value of the method described for differential diagnosis of macular defects and injuries including those to the retina and the choroid at an early stage of the disease. The method is highly sensitive in that it allows minor macular defects to be identified. Also, it may have important clinical implications for differential diagnosis of macular dysfunction and optic nerve symptoms. Haidinger's brushes in normal eyes may serve to test macular function; their distortion or deteriorated visibility represent primary or secondary symptoms of macular pathological processes. For all that, studies using this method showed that it cannot be currently applied to early diagnosis of glaucoma nor did they reveal a relationship between Haidinger's brushes and the mechanism of colour vision.

To summarise the discussion of entoptic polarisation phenomena, it is worthwhile to mention some papers on eye

sensitivity to linearly and circularly polarised light which are to some extent beyond the scope of the present review of physical (optical) experiments. They relate more to psychological rather than optical studies using physical methods [80–82]. For all that, these works should not be omitted if this review is to be comprehensive. .

Induced hypnosis has been used in experiments reported by Feigenbaum [80]. In some tests a subject induced to think that he (or she) cannot see with one eye (e.g. the left one) does not really see in unpolarised light but is perfectly able to see with this eye in polarised light! The author ascribes this to inability of the subject to simultaneously realise that it is the left eye which sees and what it actually does see. According to the author, this phenomenon is analogous to Bohr's complementarity principle in quantum mechanics which postulates an inextricable connection of the phenomenon that is being observed and its perception by the subject.

Similar but more extensive experiments were carried out by Dmitrievskii [81], although their results were interpreted in a different manner. He suggested that impaired sensitivity of the eye in a hypnotised individual resulted in variable perception of different types of polarised light. The subject did not see in right-handed circularly polarised light, saw better in linearly polarised light, and showed maximal sensitivity to the left-handed circularly polarised light which was 1000 times greater than towards unpolarised light! In terms of physical laws which have nothing to do with the induction of hypnosis, the subject should rather be persuaded that he (or she) better sees circularly polarised light any time it is presented. The problem which arises in such a situation is purely psychological, that is whether the subject needs to understand what circular polarisation is or should remain wholly ignorant of what he (she) is expected to see. It must be emphasised that Dmitrievskii [81] concerns himself with optical aspects of the phenomenon in question without going into detailed discussion of physiological processes in the eye–brain pathway and their psychological implications.

These studies were further developed by Chukova [82] where the above findings were analysed in terms of the general theory describing dependence of the efficiency of endoergic processes on characteristics of electromagnetic radiation. It has been shown that the efficiency of isomerisation of the light-sensitive pigment varies considerably with changes in a single radiation parameter, namely polarisation.

6. Corneal birefringence

The outer shell of the eyeball, the opaque sclera, is made up of a tough protein tunic which retains the shape of the eye and protects its interior from exposure to extraneous agents from the environment. The anterior portion of the sclera blends with the transparent cornea largely composed of collagen fibres arranged to form plates in the plane of the corneal surface. Certain findings obtained in experiments on small-angle light scattering [83] indicate that these retinal collagenous fibrils and lamellae should possess a degree of structural ordering reminiscent of that in a transparent crystal. Hence, corneal birefringence .

This is important for all aspects of eye polarisation optics, especially so in the context of entoptic polarisation effects because polarisation of the light is modulated by the cornea before it enters the retina. Therefore, corneal birefringence has long been a matter of interest.

Haidinger's brushes in the circularly polarised light were used by Shute as a tool to study corneal birefringence [84]. He proceeded from the assumption that ocular media (in the first place, the cornea) which exhibit double refractivity transform the incoming light from circularly to elliptically polarised. Thereafter, the radial analyser responds to the modified light as if it were plane-polarised in part, depending on the azimuth of the ellipse. In order to observe Haidinger's brushes behaviour, reversal, and disappearance, the author introduced into the visual path one or more additional compensators (phase lag plates) made from thin commercial polythene with a phase lag of $\lambda/2$, $\lambda/4$, $\lambda/5$, $\lambda/6$, etc. The idea was to find a phase lag that compensated for corneal birefringence. The findings obtained for the blue light in this study including a large number of patients ($\sim$100) were compatible with a phase lag due to corneal collagen of approximately $\lambda/12$ (48 nm). The author maintains that this result can be explained on the assumption that collagen of the corneal stroma has a predominantly oblique upward and outward orientation. This inference is in agreement with the results obtained by different methods [55, 85].

A similar compensatory technique has been employed by Smith and Weale [86] although they interpreted their findings with greater caution speaking about birefringence of "intact preretinal media of the human eye" rather than of corneal birefringence, to emphasise that other ocular media, besides the cornea, may contribute to double refraction (e.g. the lens). This contribution was estimated from the measurements of the velocity and the direction of apparent rotation of Haidinger's brushes following interposition of a phase lag plate between the rotating polariser and the observer's eye. The authors argue that the method they used is both rapid and accurate.

In Ref. [87], birefringence of the living human eye was assessed by using polarisation dependence of the contrast of the interference picture projected on the retina by two coherent light beams in one of which polarisation was varied with the aid of a Babinet–Soleil compensator. The phase shift in this optical system was measured as a function of the entry site of the incident light in the pupil plane. The phase lag of the ocular media *in vivo* was found to increase peripherally and more along the diagonal meridian than for the horizontal and vertical directions. According to the authors, the possible explanation of this effect could be the gradient in strain produced by the muscles responsible for horizontal and vertical eye movements. The calculated lag was estimated to be about 100 nm.

Measured and estimated birefringence values for the intact and isolated cornea were reported in a number of works [85, 88, 89]. The calculations were made as for a stack of crystalline plates taking into account the multilayer structure of the cornea. Experimentally found birefringence of the isolated cornea was $\Delta n = 0.0028$, in agreement with calculated values. Birefringence of the living eye was measured by using photographs of the light reflected from the outer and inner boundaries of the cornea depending on its polarisation. It has been demonstrated that corneal birefringence is largely determined by the structure of corneal fibres and only a minor fraction is due to intraocular pressure. Nevertheless, this provides an opportunity for the noninvasive measurement of intra-

ocular pressure which may be used in early diagnosis of glaucoma.

Many papers including those mentioned earlier ([56, 85, 89, 90]) contain detailed descriptions of 'the corneal polarisation cross' observable in crossed polarisers, both in the living eye and on the isolated cornea. In the latter case, the cornea was placed on a flat or convex surface in order to evaluate the effect of its curvature. It was shown that the optical mechanism responsible for the appearance of the corneal polarisation cross depended on both corneal curvature and pahse lag in corneal collagenous fibers. It was inferred, based on these findings, that only a small number of corneal fibrils have radial orientation — the majority of them are directed parallel to perpendiculars to corneal radii rather than to the radii themselves.

Certain authors emphasise similarity between the corneal polarisation cross and the macular polarisation cross discussed at greater length in Section 5. There is little doubt that both figures are due to birefringence in the corresponding ocular structures.

Section 3 of the present review mentioned some works of Van Blokland devoted to light reflection from the retina. However, this author is known to have been equally interested in corneal birefringence and the assessment of the contribution of both the cornea and the macula to total birefringence of the eye media [91, 92]. This interest is quite natural because it is characteristic of polarisation physiological optics that different polarisation effects influence one another in selected eye media which makes it very difficult to achieve unambiguous interpretation of experimental findings.

Stanworth and Naylor [85] assumed the cornea to behave like an uniaxial crystal whereas Van Blokland [91] regarded it as a crystal having two axes because the pictures he observed resembled conoscopic figures of a biaxial lamella in the convergent light (which is equivalent to a bent biaxial lamella with two axes seen in a parallel light beam). The latter author maintained that both the lens and the macula (specifically, the fovea) exhibited only weak birefringence [91]. He evaluated phase lag in different parts of the pupil plane using linearly polarised and circularly polarised light which enabled him to distinguish between partly depolarised and elliptically polarised light. The phase shift patterns obtained in this study allowed for unequivocal interpretation based upon the assumption that the cornea behaved like a biaxial crystal with the fast main optic axis perpendicular to its surface and the slow accessory axis oriented downward towards the nose. This inference was confirmed by independent findings obtained with the eye model provided with an artificial cornea made from a biaxial material.

The study reported in Ref. [92] was focused on apportioning the phase shift to the retina and the cornea. By varying the entry and exit positions of the light beam around the foveal centre of the retina without altering their location at the cornea, it was possible to distinguish between the two components. This result was interpreted as indicating that phase shift in the cornea was more than an order of magnitude higher than in the retina.

A series of investigations reported in the Russian language [93 – 95] concerned polarisation of scattered light in various transparent ocular tissues, in the first place in the cornea as well as in the lens and the vitreous body. These studies provided calculated and experimentally determined parameters of scattered radiation, specifically those for the cornea, regardless of the state of polarisation and the angle of the incident light. Light scattering by the cornea was estimated with the use of a model of a system of long cylinders (collagen fibers) with the radial distribution of probability function obtained from the analysis of electron microphotographs. Light scattering prameters were calculated on the basis of the Mee theory. It was demonstrated that the watery liquid and the vitreous body are isotropic and do not practically affect polarisation characteristics of the passing light. The cornea has anisotropic properties, and the magnitude of anisotropy can vary greatly depending on the corneal portion being examined. Anisotropy is especially pronounced at the periphery of the cornea and along its horizontal and vertical meridians. The same work contains information about orientation of optical axes and phase shift values for selected corneal portions. Applied aspects of these studies may be of value for clinical ophthalmology in that the above findings can potentially be used in the development of diagnostic tools to evaluate the state of transparent eye media and improve the effectiveness of laser eye surgery.

Both the curvature and the strain in the cornea (hence, its birefringence) depend not only on intraocular pressure but also on the state of extraocular muscles that control eye movements. This suggests the possibility of studying the role of muscular function in the light-polarising activity of the cornea. This problem was also extensively examined in the Russian scientific literature [96 – 98]. The authors studied corneal interference patterns in polarised light in a large number of intact eyes and also in enucleated porcine, rabbit, and cadaverous human eyes interposed between crossed polarisers. A dark cross was found on the central corneal surface whereas its periphery displayed characteristic interference patterns of coloured fringes (isochromes) in the form of a rhombus, the angles of which rested on horizontal and vertical meridians of the eye. It was this diamond-shaped figure that was most sensitive to alterations of the functional and anatomical states of the extraocular muscles. The authors applied the thin-membrane theory to calculation of the relationship between corneal tension and mechanical stress on the cornea. An eyeball model was designed with a thin spherical membrane which experienced pressure of the intraocular fluid from the inside and overstretching by extraocular muscles from the outside with the concomitant contraction of the sclera. The authors derived formulas describing the asymptotically strained condition of the membrane at the site where the force was applied. These formulas were used to compute the strains inside the spherical membrane. The curves connecting points of identical strain (isochromes) and main tension points (isoclines) were calculated and constructed with account taken of the gradient in the membrane thickness (corresponding to the corneal gradient in which the thickness varies from 1 mm at the side to 0.4 mm in the central portion). The shape of these theoretical curves turned out to be in good agreement with the experimentally found interference patterns. In order to bring the model into better conformity with the real situation, the calculations were made with by considering the anatomical site of attachment of each extraocular muscle and its mechanical strength. Calculations were also performed to estimate strain distribution throughout the cornea in the eyes with anomalous muscular attachment and functional

activity. For example, the studies being reviewed provided reliable objective information about the relationship between the altered interference patterns (rounded edges of the rhombus, its dislocation, angular shifts) on the one hand, and the displacement of the site of application of muscular action and changes of its strength on the other hand, in different clinical forms of squint including complicated cases. Taken together, these data allow the pathogenetic mechanisms of extraocular muscular dysfunction to be better understood and the optimal methods for the treatment and elimination of its different forms to be recommended. In addition, experimental models of interference patterns using cadaveric human eyes were proposed in order to validate the above methodology. With the use of springs and other special devices, researchers simulated the eyball position in the orbit and applied staggered loads to the cornea.

7. Polarisation properties of the lens

The cornea appears to be the major but not the sole ocular medium responsible for birefringence in the eye. Macular structures have been shown to contribute to phase shift. Different authors agree that the vitreous body is an isotropic structure. The potential role of the lens as a source of birefringence is discussed below.

It has been mentioned earlier that Cogan [56] observed the polarisation cross on an isolated lens placed between crossed polarisers and used this finding in an atttempt to explain the appearance of Haidinger's brushes. The experiments revealed regular radial orientation of the particles of which the lens is made.

Weale [99] has found that, being a uniaxial crystal, the lens exhibits the property of birefringence, similar to other multilayer tissues. The index of refraction for an unusual ray of light is lower than for the ordinary one. Δn is of the order of 10^{-6}. Birefringence increases with increasing age. It is also related to the degree of lens remodelling which in turn depends on the age of the subject. These findings may have implications for clinical medicine since they provide a deeper insight into etiology of senile cataract.

Japanese authors [100] examined linear and circular birefringence in lenses dissected from bovine eyeballs. They measured the lens thickness and the rotation of the plane of polarisation upon transmission of light in relation to its wavelength. Comparison between the observed and calculated values allowed the authors to distinguish between optical rotations due to linear and circular birefringence in order to evaluate each separately. They associated linear birefringence with the quasicrystalline molecular arrangement of collagen proteins in the lens whereas circular birefringence was considered to be related to the asymmetry of their inner molecular structure. The order of magnitude of Δn was limited to 10^{-4}. However, the authors were uncertain whether these data were valid for the lens *in vivo* and did not totally exclude the possibility of there being an artifact of lens dissection and manipulation in the course of experiments which might have lead to increased tension and structural changes.

High transparency of the normal lens is of paramount importance for maintaining its vital functions. At the same time, microfluctuations of the refractive index are known to result in light scattering by the lens. Formation of cataract is associated with protein complexing into high molecular weight aggregates which may have enhanced light-scattering potential. This leads to the loss of transparency by the lens. On the other hand, the lens is a structure capable of birefringence even though its birefringence is small. This makes it optically anisotropic which cannot but affect its scattering characteristics. The isotropic lens would exhibit light-scattering activity only if the polariser and the analyser were parallel ($I_{||}$) whereas in the anisotropic lens, the light is scattered when the polariser and the analyser are mutually perpendicular ($I_{\perp}$).

This line of reasoning allowed Bettelheim [101, 102] to hypothesise that in the normal lens, there is a balance between intrinsic birefringence and form-birefringence providing a near-zero total birefringence in the absence of $I_{\perp}$-scattering. If this is true, then artificial disturbance of the balance should result in an increase of light scattering, and predominantly its $I_{\perp}$-component should be observable. Experiments were carried out to prove this supposition. The author took photographs of nuclear and cortical sections of rat and bovine lenses in parallel and crossed polarisers. Some sections served as controls while others were used to artificially induce optical anisotropy. Placed in water, bovine lenses underwent a different degree of swelling and became opaque. The rats were sacrificed at different intervals after being fed a diet containing galactose which had previously been shown to induce the development of cataract. The lenses were obtained from enucleated eyes. Light-scattering components $I_{||}$ and $I_{\perp}$ for the inhomogeneous medium were calculated with regard for fluctuations of both density and optical anisotropy. In the normal lens, the two birefringence components were in equilibrium, and only $I_{||}$ light-scattering component could be observed. Experiments on induced anisotropy in the bovine lens revealed the development and further growth of the $I_{\perp}$ light-scattering component. The ratio $R = I_{\perp}/I_{||}$ reflected the relative contribution of optical anisotropy to light scattering. The development of optical anisotropy in treated bovine lenses influenced the $I_{\perp}$-component stronger than the $I_{||}$-component and that in the nucleus to a greater extent than in the cortical sections. This may indicate that there was a greater degree of macromolecular organisation in the fibre cells of the nucleus than of the cortical portion of the lens. In the rat lens, both components grew with growing cataract. Initially, the $I_{\perp}$-component increased faster until the R value reached a plateau. These findings agree with biochemical and microscopic observations on the development of cataract. Moreover, the understanding of the relationship between the two light-scattering components provides the basis for further studies of cataract formation in both the nucleus and the cortex of the lens.

It was mentioned earlier that Refs [94, 95] reported data on light scattering not only in the cornea but also in the lens. Specifically, polarisation of scattered light by the normal and cataract-afflicted rabbit lens was evaluated experimentally. These studies revealed substantial changes in the characteristics of the opaque lens suggesting the presence of large (about 1 μm) nonspherical scattering particles in the medium. This finding may have implications for quantitative diagnosis of pathological processes in the lens tissue.

8. Polarisation sensitivity in invertebrates

It has already been mentioned that the eye structure in different vertebrate species has much in common. It can therefore be assumed that entoptic polarisation phenomena, such as Haidinger's brushes, constitute an inherent feature in vertebrates as they do in humans. Also, they may be of some importance for the orientation of migratory animals, along with their ability to use the night sky, the Earth's magnetic lines, and other hypothetical cues as navigational aids. Certain studies suggest the ability of pigeons [103] and turtles [104] to detect polarised light although experimental data available in the literature need to be confirmed.

For all that, there are organisms showing an extraordinary degree of sensitivity to polarised light. These are in the first place insects, especially bees. Visual sensation in insects may be described in terms of their behaviour (e.g. anisotropy of movements) or based on electroretinograms (ERGs). Electroretinography is widely used to study vision in humans and animals including arthropods. Nevertheless, the bulk of information about polarisation sensitivity in insects has been obtained by direct observation of their behaviour in polarised light. A book by Frisch [105] appears to provide the most detailed account of these studies. Honeybees have long been known to perform what is currently referred to as a dance. A scout bee uses the dance to notify the other bees about a new source of food. A dancing bee that returned fully loaded to the comb runs straight across a few cells, then goes back to the starting point along a curved path, and repeats these dance cycles again and again. The location of the food source is immediately indicated by the direction of the straight run provided the bee performs on the horizontal surface. If the bee dances on the vertical face of the honeycomb, it characteristically transforms the system of coordinates by converting the angle at which she dances to the line drawn in the direction of the Sun into the angle to the vertical (opposite to the force of gravity). Numerous observations indicate that bees need not necessarily see the Sun to communicate directional information by means of various dance-like movements. At the same time, the direction of the straight run has been shown to depend on a variety of environmental factors among which polarisation of the blue skylight appears to be of primary importance. The honeybee performs properly oriented dance-like movements only when she sees at least a small opening of the blue sky that appears between the clouds. Both the direction and the degree of polarisation in different parts of the sky vary from 0 to 70% – 80% [106]. Distribution of polarisation across the sky is directly related to the Sun's position. Therefore, polarisation in a selected segment of the blue sky may in principle serve as a clue in determining the direction towards the Sun (the main axis in 'the bee's system of coordinates'). The hypothesis of polarisation involvement in the mechanism of navigation in honeybees has been unequivocally confirmed by experimental data. Briefly, horizontal honeycombs were placed in a dark chamber having a window oriented towards the northern part of the cloudless sky. Straight runs of the dancing bee were directed towards the West indicating location of the food source relative to the hive. When the comb was illuminated through the window by the light from the southern part of the sky (with the use of a mirror), orientation of the dance was inverted, and the straight runs of the bee pointed to the East. When the sky was concealed behind the clouds, the bee performed random dance-like movements. In the chamber with the window covered with a polaroid, orientation of the straight component of the bee's dance did not significantly change as compared with that in the absence of the polaroid, provided oscillations were allowed to pass through the polaroid parallel to the predominant direction of polarisation of the blue skylight. Following rotation of the polaroid, straight runs of the bee turned by the same angle. If turning the polaroid towards one side always resulted in the deviation of the run in a certain direction (e.g. to the right), then turning it towards the other side inevitably caused the bee run to the left. With this approach it was possible to change the dance angle in any way but not by more than 50° – 60°. If the deviation exceeded this angle, the bee moved at random and the runs became chaotic. Statistical analysis of experimental errors confirmed that the differences were significant. Collectively, the results of these studies were interpreted as indicating high polarisation sensitivity of the bees' organs of sight. It was shown later that honeybees perceive only polarised light of a shorter wavelength ($\lambda < 500$ nm) and are especially susceptible to polarisation of ultraviolet light ($\lambda < 400$ nm).

Like bees, many other invertebrates (insects, spiders, crustaceans, etc.) are sensitive to polarised light. The list of animals in which the ability to respond to polarised light has been discovered and described includes tens of species [107]. But only bees exhibit such a remarkable behavioural trait as oriented dance movements which allowed experiments like those reported above to be performed. Experimental studies on the sensitivity to polarised light in the majority of other species only demonstrated that rotation of the polaroid over a moving animal resulted in the deviation of the animal's path to the same side. Moreover, the ability of many invertebrates (bees, flies, *Xiphosura*, *Hemiptera*, etc.) to perceive polarised light was confirmed in independent experiments in which the ERG technique was used. A 90° turn of the plane of polarisation was normally accompanied by a 15% – 20% change in the electric signal from a responding visual cell. This roughly corresponds to the effect of a two-fold change in light intensity, a physiologically significant effect.

Common occurrence of polarisation sensitivity amongst invertebrate animals is certainly not a mere coincidence. It implies an important biological function and its role in the mechanisms of visual orientation in insects which is comparable with their ability to use the Sun and the Moon as navigational aids. It is these three elements of the 'sky compass', i.e. the Sun, the Moon, and polarisation of the sky, on which the ability of insects to orientate themselves in space is founded. It is worthwhile to note that animals must have an internal clock to be able to use the sky compass because the meaning of its constituent elements is variable in time. Various types of the internal clock have been found to function in arthropods, but this interesting problem is beyond the scope of the present review.

Now, what are the possible mechanisms that enable insects to analyse polarised light?

To begin with, it is conceivable that insect eyes can respond to intensity fluctuations resulting from reflection, refraction, and scattering of polarised light in the environment, rather than to polarisation proper. Doubtless, such

indirect responsiveness to polarisation must play a certain role; however, it does not account for all the known facts pertaining to polarised light perception. Evidently, intraocular structures must exist which immediately respond to polarised light per se.

Two hypothetical mechanisms have been suggested to explain polarisation sensitivity.

One hypothesis implies indirect perception of polarisation within ocular media. Characteristics of light refrac-tion and reflection at numerous interfaces between different portions and layers of these media (except the angle of incidence and index of refraction) show marked dependence on the state of polarisation. Therefore, illumination of the retina varies as polarised light is transmitted through multilayer ocular media. This mechanism is certainly operative in the eye, but it can hardly account for a great variety of the most complicated forms of behaviour in insects in response to polarised light (e.g. their ability to navigate).

The other hypothesis suggests that insects directly react to the state of polarisation. The cornerstone of this hypothesis is the facet structure of the arthropod's eye, a major trait that distinguishes it from the eye of vertebrate animals [107].

The cornea in the faceted eye of insects (Fig. 15) consists of a large number of closely packed convex hexahedrons made of chitin (facets), each of which serves as a pupil (a) for a separate visual structural unit, ommatidium. The number of these elements varies from hundreds to thousands. The facet diameter range from 15 to 40 μm. The axes of ommatidia are perpendicular to the corneal surface. The field of vision is 180° or more, and the angle between the axes of adjacent ommatidia is 1°–2°. The shape of the ommatidium is that of a truncated cone several hundreds of micrometers long and tens of micrometers wide, located between the cornea (a) and the basal membrane (h). Each ommatidium has three major functional elements: refractive, photoreceptive, and screening.

The refractive element consists of the pupil (a) and the lens cone (c) which functions both to focus a light beam and to prevent the lateral spread of light to neighbouring ommatidia.

Morphologically, the light-sensitive element is an elongated visual cell bearing a nerve fibre at one end. Each ommatidium consists of a few (up to 10) visual cells (f) packed into a bundle, retinula. A visual cell contains in turn a long and very thin functional structure called rhabdomere. Retinular rhabdomeres are axially arranged in ommatidia to form a compact 100–600 μm long structure, rhabdom (e).

The cross-section through a retinula shows a rosette surrounding the rhabdom. Ultrastructural features of the rhabdom are of paramount importance because it is in fact the primary organ of sight in which the light is absorbed. Also, it is responsible for polarisation sensitivity inherent in the insect eye. Rhabdoms found in different species of insects fall broadly into two categories: open and closed. Rhabdoms of the open type contain totally isolated rhabdomeres whereas in closed rhabdoms, rhabdomeres blend with one another.

Each rhabdomere consists of a large number of thin (400–1200 Å in diameter) closely packed tubules (microvilli) oriented roughly perpendicular to the longitudinal axis of the rhabdomer. The microvilli are regularly arranged to form a periodic structure. The walls of the microvilli have a 20–30 Å thick boundary layer containing specifically oriented molecules of the visual pigment.

The screening (light-insulating) element of an ommatidium is a light-absorbing or light-reflecting pigment (b, d, g) the molecules of which are aligned in such a way as to prevent light rays from entering through facets of the adjacent ommatidia and eliminate scattered light.

Square cross-sections through the periodic system of regularly arranged microvilli in many arthropods and cephalopods (Fig. 16) show a multilayer structure in which the alternating layers contain microvilli with mutually perpendicularly axes [108]. In turn, the layers are arranged perpendicular to the rhabdomere axis.

These data obtained by electron microscopy taken together with the results of behavioural and electrophysio-

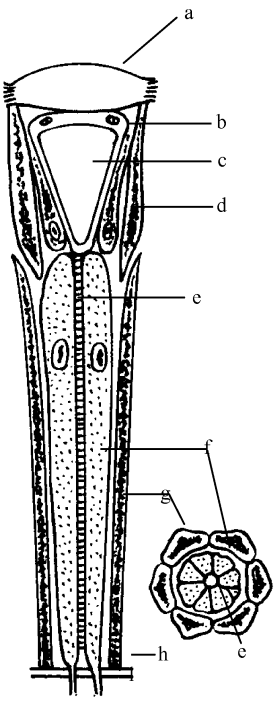

Figure 15. Schematic representation of an ommatidium.

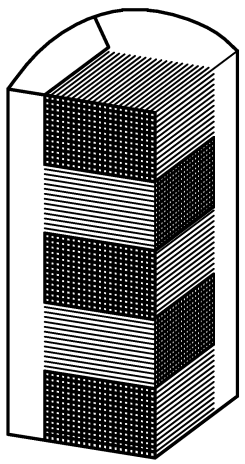

Figure 16. Periodic structure of microvilli.

logical studies [109] provide the basis for understanding of polarisation sensitivity in the organs of sight of insects, crayfish, crabs, lobsters, and a number of other invertebrate species. The physical mechanism underlying polarisation sensitivity involves dichroism of visual pigment molecules which is related to the degree of their regularity in the walls of microvilli.

The mechanisms behind polarisation sensitivity of visual organs in vertebrates (very low) and invertebrates (generally very high) being essentially different, it may be of interest to compare the structure of rod and cone outer segments in vertebrate animals with that of rhabdomeres in invertebrates [41 – 43] in order to evaluate dichroic potential in the eyes of these two types of organisms.

The rod outer segment in vertebrates is essentially a stack of disk membranes, i.e. lipid matrices, containing rhodopsin, a light-sensitive pigment. Rhodopsin molecules are globular proteins partly embedded in the double lipoid layer of the membrane. Interaction between hydrophilic and hydrophobic forces results in the orientation of the oscillator of absorption almost parallel to the membrane surface. The membrane is a fluid substance with the viscosity of olive oil. Rotational diffusion of rhodopsin molecules normally occurs in the plane of the membrane [46, 47] which results in chaotic orientation of oscillators in the membrane plane. Therefore, rhodopsin molecules do not exhibit dichroism when the light travels parallel to the axis of the outer segment, as under normal physiological conditions. In contrast, marked dichroism of the rod outer segment is readily apparent if it is illuminated by the light from a laterally posed source, because only the electric vector of the light parallel to the membrane plane can be absorbed in this case.

Photoinduced dichroism may be expected to develop if the rod outer segment is illuminated by physiologically oriented linearly polarised light, owing to the bleaching of molecules in which oscillators are parallel or oriented approximately in the same direction as the electric vector. Such an effect is negligible in intact cells because of rapid rotational diffusion. However, photoinduced dichroism is experimentally observable in cells fixed in glutaroaldehyde to arrest molecular rotation. Data on the kinetics and temperature dependence of photodichroism in intact cells were used to evaluate the viscosity of lipid membranes.

Chaotic orientation of oscillators in the plane of the membrane may have pragmatic physiological connotation and is by no means to be regarded as a byproduct of evolution. It facilitates the maximum utilisation (absorption) of the incident light admitted by photoreceptors because of the impaired self-screening effect. Had oscillators in the plane of the first disk membrane been regularly aligned, they would have been able to absorb only the electric vector parallel to them, whereas the perpendicular vector could not have been absorbed in the adjoining layer with oscillators perpendicular to the vector. It was calculated that the total absorption of unpolarised light in case of chaotic orientation of oscillators in the plane of the membrane was twice that in case of their regular arrangement.

Dichroic patterns of rhabdomeres in invertebrate organisms are quite different [42]. Rhodopsin molecules are distributed in the boundary layer of the walls of microvilli where layers are oriented perpendicularly to the rhabdomere axis. Moreover, reciprocal orientation of microvilli in the adjoining layers is mutually perpendicular. Oscillators of absorption in the walls of microvilli show chaotic distribution. However, this does not interfere with the development of dichroism as long as the light travels in the 'physiological' direction. In order to simplify calculations, it is convenient to think of single microvilli as long, narrow boxes having a square cross-section (see Fig. 17). On the whole, oscillators present in all surfaces of the box are randomly oriented and can be categorized into two equally-sized groups. Half of the oscillators are taken to have axial orientation, with the other half being perpendicular in relation to the box axis. Dichroism for the 'physiological' light is absent in the upper and the lower surfaces of the box but is apparent in the lateral surfaces. This provides the basis for polarisation sensitivity to the light perceived by a rhabdomere under physiological conditions. Chaotic orientation of the visual pigment in the walls of microvilli is more favourable than the perfect alignment or partial orientation of its molecules for maximal utilisation (absorption) of the light entering the eye, due to the self-screening effect. Here again, chaotic orientation has been estimated to be twice as advantageous as any other [42, 110].

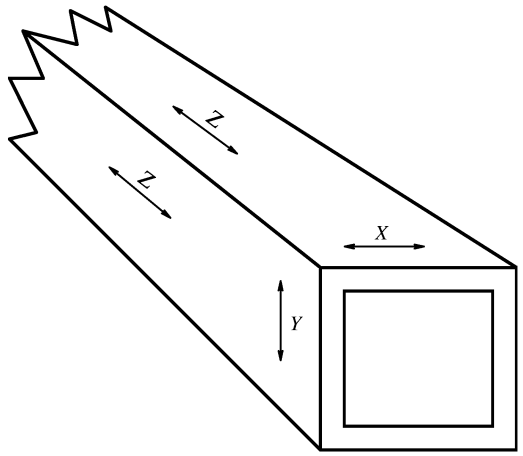

Figure 17. Box-model of microvillus.

Experimental studies have provided unequivocal evidence of the relationship between polarisation sensitivity (assessed from behavioural patterns) and dichroism (electrophysiological data and direct optical measurement of polarisation using enucleated photoreceptors). Where there was paradoxical discrepancy between the results obtained by both methods (the former indicating high polarisation sensitivity, the latter — small dichroism or its absence), this was indirectly shown to be due to structural changes during enucleation [111].

Now, it is only natural to try and examine potential evolutionary factors responsible for the marked difference between polarisation sensitivity in visual organs of invertebrate and vertebrate animals (in the first place, in human eyes). At present, it is difficult to offer a comprehensive and universally acceptable explanation for the divergence of this feature in the course of evolution. Following are some considerations that may happen to be relevant if the solution of this problem is to be sought for.

The first question to answer is whether polarisation sensitivity is really necessary and polarised light is so common in nature as to be worth being specifically perceived by the organ of sight. The answer is definitely 'yes'. Suffice it to remind about polarisation patterns of the light scattered by the sky, aquaeous media, and other surfaces [106]. A most reliable criterion in this context is the magnitude of polarisation as related to the requirements of individual organisms in terms of behaviour. Polarisation must be apparent at a megascale to be worthy of perception by different animals. In other words, a honeybee must have at least a flower meadow as a source of polarised light, for birds such a source may be the length of a migration route, etc. In the immediate environment of a vertebrate organism displaying relatively poor mobility, numerous local depolarisation events interfere with its response to macropolarisation which makes direct perception of polarised light of little value for the animal.

An important function for any visual system to perform is space perception which is realised through the solution of rather a difficult problem of forming images of three-dimensional objects on the two-dimensional retina. The static facet system of the insect eye solves this problem at least in part by means of 'polarisation scanning'. At the same time, major features of space perception by the human eye are essentially due to the dynamic structures that are responsible for the remarkable ability of the eye to move and binocular vision [112]. Eye mobility allows us to compensate for the small angle of the visual cone for acute vision ($\sim 7°$) which is determined by the small area (fovea) of acute vision and high resolution. The major processes involved are spatial summation and temporal cumulation, both being necessary for primary discrimination between the useful signal and fluctuations. This makes the labile system of visual information in vertebrates essentially different from static facet structures of invertebrate animals. Certainly, the final sensory perception of space is formed in brain structures, specifically using the constancy mechanism which makes up for geometric imperfections interfering with image construction of three-dimensional objects on the two-dimensional retina. However, this problem pertains to physiological processes in the eye–brain pathway and is beyond the scope of optical and polarisation phenomena discussed in the present review. The objective of this discussion was to emphasise that the above differences between the two types of eyes may all be due to a common cause. This prompts analogy of sight differences in insects and humans with difference between fixed instincts of insects and flexible human thinking.

Acknowledgements. I wish to express my gratitude to L I Belova, Head, The Library of the Physical Institute, Russian Academy of Sciences, and T V Sergeeva, in charge of MBA, for their kind and valuable assistance in search of literature sources.

References

1. Vladimirov Yu A, Potapenko A Ya *Fiziko-khimicheskie Osnovy Fotobiologicheskikh Protsessov* (Physico-Chemical Bases of Photobiological Processes) (Moscow: Vysshaya Shkola, 1989) p. 143
2. Timofeev Yu P, Fridman S A, Fok M V *Preobrazovanie Sveta* (Transformation of Light) (Moscow: Nauka, 1985) p. 109
3. Stiles W S, Crawford B H *Proc. R. Soc. London B* **112** 428 (1933)
4. Wright W D, Nelson J H *Proc. Phys. Soc.* **48** 401 (1936)
5. O'Brien B *J. Opt. Soc. Am.* **36** 506 (1946)
6. Barany E *Acta Ophthalm.* **24** 93 (1946)
7. O'Brien B *J. Opt. Soc. Am.* **37** 275 (1947)
8. De Groot P J, De Pender E *Vision Res.* **19** 1065 (1979)
9. De Groot P J *Vision Res.* **19** 1253((1979)
10. Stromeyer C F, Mulligan J B, Birch D G, Dawson B M *Vision Res.* **22** 217 (1982)
11. Enoch J M *J. Opt. Soc. Am.* **53** 71 (1963)
12. Fischer W, Rohler R *Vision Res.* **14** 1013 (1974)
13. O'Brien B *J. Opt. Soc. Am.* **41** 882 (1951)
14. Artal P *J. Opt. Soc. Am. A* **6** 1941 (1989)
15. Safir A, Hyams L *J. Opt. Soc. Am.* **59** 757 (1969)
16. Weale *J. Physiol.* **186** 175 (1966)
17. Campbell F W, Cubisch R W J *J. Physiol. (London)* **186** 558 (1966)
18. Gorrand J M, Alfieri R, Boire J Y *Vision Res.* **24** 1097 (1984)
19. Rohler R, Schmielau F *Vision Res.* **16** 241 (1976)
20. Rohler R, Miller U, Aberl M *Vision Res.* **9** 407 (1969)
21. Charman W N *Brit. J. Physiol. Opt.* **34** 34 (1980)
22. Van Blokland G L *J. Opt. Soc. Am.* **A2** 72 (1985)
23. Van Blokland G J, Van Norren D *Vision Res.* **26** 485 (1986)
24. Van Blokland G J *Vision Res.* **26** 495 (1986)
25. Enoch J M, Hope G M *Invest. Ophthal.* **11** 765 (1972)
26. Atkins P W *Molecules* (New York: Scientific American Library, 1987)
27. Hagins W A, Jennings W H *Discuss. Faraday Soc.* **27** 180 (1959)
28. Forster Th *Fluoreszenz organischer Verbindungen* (Gottingen, 1951)
29. Ermolaev V L, Bodunov E N, Sveshnikova E B, Shakhverdov T A *Bezizluchatelnyi Perenos Energii Elektronnogo Vozbuzhdeniya* (Radiationless Transfer of Electron Excitation Energy) (Leningrad: Nauka, 1977)
30. Agranovich V M, Galanin M D *Perenos Energii Elektronnogo Vozbuzhdeniya v Kondensirovannykh Sredakh* (Electron Energy Transfer in Condensed Media) (Moscow: Nauka, 1978)
31. Zhevandrov N D *Opticheskaya Anizotropiya i Migratsiya Energii v Molekulyarnykh Kristallakh* (Optical Anisotropy and Energy of Migration in Molecular Crystals) (Moscow: Nauka, 1987)
32. Tao T *Biochem. J.* **122** 54P (1971)
33. Stryer L *Science N.Y.* **162** 526 (1986)
34. Tao T *Biopolymers* **8** 609 (1969)
35. Kawamura S, Tokunaga F, Yoshizawa T, Sarai A *Vision Res.* **19** 879 (1979)
36. Schmidt W J *Kolloid-Z. B* **85** 137 (1938)
37. Liebman P A, Jagger W S, Kaplan M W, Bargoot F C *Nature (London)* **251** 31 (1974)
38. Liebman P A *Biophys. J.* **2** 161 (1962)
39. Wald G, Brown P K, Gibbons J R *J. Opt. Soc. Am.* **53** 20 (1963)
40. Strackee L *Vision Res.* **10** 925 (1970)
41. Liebman P A, in *Photoreceptor Optics* (Eds A W Snyder, R Menzel) (New York: Springer, 1975) p. 199
42. Laughlin S B, Menzel R, Snyder A W, in *Photoreceptor Optics* (Eds A W Snyder, R Menzel) (New York: Springer, 1975) p. 237
43. Waterman T H, in *Photoreceptor Optics* (Eds A W Snyder, R Menzel) (New York: Springer, 1975) p. 339
44. Pak W L, Helmich H G *Vision Res.* **8** 585 (1968)
45. Collins F D, Love R M, Morton R A *Biochem. J.* **51** 669 (1952)
46. Cone R A *Nature (London) New Biol.* **236** 39 (1972)
47. Poo M, Cone R A *Nature (London)* **247** 438 (1974)
48. Born M, Wolf E *Principles of Optics* sixth edition (Oxford: Pergamon Press, 1980)
49. Haidinger W *Annal. Physik B* **63** 29 (1844)
50. Shurcliff W A *J. Opt. Soc. Am.* **45** 399 (1955)
51. Neuberger H H *J. Opt. Soc. Am.* **30** 258 (1940)

52. Brumberg E M, Feofilov P P *Dokl. Akad. Nauk SSSR* **32** 192 (1941)
53. Helmholtz H *Handbuch der physiologischen Optik* (Leipzig: Voss, 1867) p. 421
54. De Vries H, Spoor A, Jielof R *Nature (London)* **166** 958 (1950); *Physica* **19** 419 (1953)
55. Boehm G *Acta Ophthal. B* **18** 109, 143 (1940)
56. Cogan D C *Arch Ophthal.* **25** 391 (1941)
57. Brewster D *Phil. Trans. R. Soc. London* **1** 21 (1815)
58. Valentin G *Arch. Ophthal.* **4** 227 (1858)
59. Stanworth A, Naylor E J *Brit. J. Ophthal.* **34** 282 (1950)
60. Naylor E J, Stanworth A *J. Physiol. (London)* **124** 543 (1954)
61. Hallden U *Arch. Ophthal.* **57** 393 (1957)
62. Summers D M, Friedmann G B, Clements R M *J. Opt. Soc. Am.* **60** 271 (1970)
63. Bone R A *Vision Res.* **20** 213 (1980)
64. Bone R A, Landrum J T *Appl. Optics* **22** 775 (1983)
65. Bone R A, Landrum J T *Vision Res.* **24** 103 (1984)
66. Hemenger R P *J. Opt. Soc. Am.* **72** 734 (1982)
67. Hochheimer B F *Vision Res.* **18** 19 (1978)
68. Hochheimer B F, Kues H A *Appl. Optics* **18** 3811 (1982)
69. Ranan C V *Memoirs of the Raman Research Institute* Vol. 10 (Bangalore, 1963) p. 81
70. Tamarova R M *Biofizika* **12** 652 (1967)
71. Shurcliff W A *Polarized Light: Production and Use* (Cambridge, MA: Harvard University Press, 1962)
72. Vavilov S I *Mikrostruktura Sveta* (Microstructure of Light) (Moscow: Izd. Akad. Nauk SSSR, 1950) p. 49
73. Sommer A, Kues H A, D'Anna S A, Arkell S, Robin A, Quigley H A *Arch. Ophthal.* **102** 864 (1984)
74. Dreher A, Reiter K, Bill J *Invest. Ophthal.* **29** 355 (1988)
75. Goldschmidt M *Arch. Ophthal.* **44** 129 (1950)
76. Forster H W *Am. J. Ophthal.* **38** 661 (1954)
77. Schmidt I *Arch. Ophthal* **52** 583–597 (1954)
78. Sloan L L, Naquin H A *Am. J. Ophthal.* **40** 393 (1955)
79. Tamarova R M, Dolbishcheva V M, Avetisov E S *Trudy Instituta Med. Instr. i Oborud.* (Proc. Inst. Med. Intruments and Equipment) (Moscow, 1962) p. 72
80. Feigenberg I M *Dokl. Akad. Nauk SSSR* **253** 500 (1962)
81. Dmitrievskii I I, Preprint MIFI 014-85 (Moscow, 1985)
82. Chukova Yu P *Dokl. Akad. Nauk SSSR* **300** 504 (1988)
83. Freund D E, McCally R L, Farrel R A *J. Opt. Soc. Am. A* **3** 1970 (1986)
84. Shute S *Nature (London)* **250** 163 (1974)
85. Stanworth A, Naylor E J *J. Exp. Biol.* **30** 160 (1953)
86. Smith R W, Weale R A *J. Physiol. (London)* **246** 37P (1974)
87. Bour L J, Cardoso N *Vision Res.* **21** 1413 (1981)
88. Stanworth A, Naylor E J *J. Brit. Ophthal.* **34** 201 (1950)
89. Stanworth A *J. Exp. Biol.* **30** 164 (1953)
90. Cope W T, Wolbarsht M L, Jamanashi B S *J. Opt. Soc. Am.* **68** 1139 (1978)
91. Van Blokland, Verhelst S C *J. Opt. Soc. Am. A* **4** 82 (1987)
92. Brink H B, Van Blokland G J *J. Opt. Soc. Am. A* **5** 49 (1988)
93. Maksimova I L, Tuchin V V, Shubochkin L P *Opt. Spektr.* **60** 801 (1986)
94. Maksimova I L, Tuchin V V, Shubochkin L P *Opt. Spektr.* **65** 615 (1988)
95. Shubochkin L P, Abstract of Candidate Thesis, Saratov, 1987
96. Kochina M L, in *Aktualnye Voprosy Oftalmologii* (Current Problems of Ophthalmology) (Kharkov, 1980) pp 45, 47
97. Kochina M L *Kibernetika i Vichislitel'naya Tekhnika* (Cybernetics and Computer Technology) (Kiev, 1991), No. 90, p. 97
98. Pen'kov M A, Altukher G M, Kochina M L *Biofizika* **27** 313 (1982)
99. Weale R A *J. Physiol. (London)* **284** 112P (1978)
100. Takeguchi N, Nakagaki M *J. Opt. Soc. Am.* **58** 415 (1968)
101. Bettelheim F A *Exp. Eye Res.* **21** 231 (1975)
102. Bettelheim F A *J. Colloid Interface Sci.* **63** 251 (1978)
103. Kreithen M L, Keeton W T *J. Comp. Physiol.* **89** 83 (1974)
104. Carr L *In the Ocean Without a Compass*
105. Frisch K von *Bees, Their Vision, Chemical Senses and Language* (Ithaca, NY: Cornell University Press, 1950)
106. Zhevandrov N D *Anizotropiya i Optika* (Anisotropy and Optics) (Moscow: Nauka, 1974)
107. Mazokhin-Porshnyakov G A *Zrenie Nasekomykh* (Vision in Insects) (Moscow: Nauka, 1965)
108. Waterman T H, Horch K W *Science* **154** 467 (1966)
109. Naka K, Kuwabara M *Nature (London)* **184** 455 (1959)
110. Gribakin F *Nature (London)* **246** 357 (1973)
111. Goldsmith T H, in *Photoreceptor Optics* (Eds A W Snyder, R Menzel) (New York: Springer, 1975) p. 392
112. Raushenbakh B V *Sistemy Perspektivy v Izobrazitel'nom Iskusstve. Obshchaya Teoriya Perspektivy* (Perspective Systems in Fine Arts: General Theory of Perspective) (Moscow: Nauka, 1986)