Advances in light scattering*

G. S. Landsberg
Usp. Fiz. Nauk **163**, 33–50 (April 1993)

1. LIGHT SCATTERING AND FLUORESCENCE

The difference between fluorescence and light scattering is readily described in terms of familiar concepts. In the case of fluorescence, we are dealing with the excitation of radiation that is typical of the fluorescing material. The spectrum of this radiation is largely determined by the nature of the fluorescing material, whilst the wavelength of the exciting light plays a secondary part. It is obvious that the exciting radiation must be such that it is absorbed by the target material. As a rule, the relevant absorption band has a maximum that is shifted somewhat toward shorter wavelengths relative to maximum of the florescence spectrum (Stokes' rule).

Light scattering, on the other hand, is a process whereby the primary beam of light incident on a body undergoes a change in its direction of propagation, but there is no change in its frequency: the spectrum of scattered light repeats the spectrum of the exciting radiation. There is, of course, a change in the wavelength distribution of the scattered-light intensity, which is described by Rayleigh's law[1] according to which the intensity is inversely proportional to the fourth power of the wavelength.

The differences established above require further elucidation. From the standpoint of the mechanism responsible for fluorescence and scattering, the difference between them may be formulated in terms of classical theory as follows. Flourescence is the excitation of vibrations that are characteristic of the molecules and atoms of the fluorescing medium. The vibrations have periods that are determined by the processes occurring in the medium itself, and must therefore be classified as *natural* vibrations. Conversely, scattering is due to the excitation of vibrations in which an atom is forced into an oscillatory process whose period is equal to that of the external wave, i.e., these are *forced* vibrations. Accordingly, there *should be no wavelength change* on scattering. However, a wavelength change *may not* be observed in fluorescence either. As a matter of fact, in the gaseous state, isolated atoms are characterized by well-defined periods, so that they are able to absorb only within a very narrow monochromatic part of the spectrum, and the period of natural vibrations excited in them is equal to the period of the absorbed light. Fluorescence is then a resonance phenomenon, i.e., the wavelength of fluorescent radiation is equal to that of the exciting (absorbed) light. Indeed, the fluorescence of sodium vapor discovered by Wood[2] is of this type. The same phenomenon of resonant fluorescence was subsequently observed in the vapors of other materials (Hg and I_2; Ref. 3). In liquids, or solutions, we have to deal with molecules that interact strongly with the ambient molecules. The natural optical periods of liquids are therefore less sharply defined than those of monatomic vapors or gases. Accordingly, the absorption spectrum of liquids typically consists of relatively broad bands, and one cannot speak of strict resonance between light and atoms. For the same reasons, i.e., molecular interactions, the fluorescence spectrum of these objects is also banded. The fact that absorption and fluoresence spectra are not identical cannot be simply explained in terms of classical ideas. On the other hand, it is well-known that Stokes' law was formally deduced by Einstein[4] from the theory of light quanta.

Thus, we can define fluorescence as the onset of *natural* vibrations (or quantum processes leading to the emission of natural frequencies) that arise under the influence of incident light; in contradiction to this, light scattering is a process whereby *forced* vibrations (or the corresponding quantum processes) take place.

This difference is related to another question that is particularly important from the standpoint of the theme of this article.

When fluorescence—ordinary or resonant—is excited, we are dealing with the natural frequencies of matter. The actual emission of light is a secondary event that is separated from the primary phenomenon, i.e., from the interaction with light, by processes that result in the absorption of the incident light energy. We do not know exactly the nature of these processes except that they reduce to internal perturbations at the end of which the atom is in a different quantum state. Experiment suggests, however, that it is probable that the time interval occupied by these processes is of the order of 10^{-9} s (Refs. 5 and 6). The fact that the above two events are distinct is also reflected in the fact that the phase of the emitted light is unrelated to the phase of the exciting radiation. The initial phase of light emitted by each center is therefore largely determined by processes taking place in its interior. Thus, even centers separated by distances of the order of a wavelength, i.e., centers that are excited by a set of waves that are definitely mutually coherent, become sources of secondary waves that are mutually incoherent. It follows that fluorescence propagates uniformly in all directions because it is effectively due to independent sources. There are no preferred directions of propagation because waves emitted by different sources do not interfere.

In contrast to fluorescence, we shall interpret scattered light as taking the form of secondary waves due to forced vibrations of electrons in atoms or molecules under the influence of primary light. Its period is the same as the period of the latter. At the very high frequency of ordinary light (of the order of 10^{15} s^{-1}), the process of forced excitation of an electron should very rapidly reach its steady state. In all probability, this occurs after a few dozen vibrations, so that the vibrations become the source of steady secondary waves in a time of the order of 10^{-13} s. This is shorter by a factor of the order of 10^3 than the interval that

 1063-7869/93/040252-15$10.00

separates the act of excitation from the act of emission of fluorescence or other processes associated with the excitation of natural vibrations.[1)] Of course, the fact that it is *forced* vibrations that are involved in light scattering ensures that the period of the secondary waves generated by these vibrations is the same as the period of the exciting light. Moreover, the initial phase of the secondary waves is determined by the phase of the primary wave. Hence, all centers that lie so close to one another that they can be excited by waves belonging to the same coherent wave train are sources of secondary waves that are coherent with one another and with the primary wave. The observed wave is thus seen to arise from interference between these secondary waves as they superimpose on the primary wave. In other words, light scattering is a phenomenon that relies on the same basic process as all other light propagation phenomena in a material medium (rectilinear propagation, dispersion, reflection, and refraction). An electromagnetic wave entering a material medium at first propagates instantaneously with its vacuum velocity c. However, after a very short interval of time, the wave induces the vibrations of electrons present in the medium, which become the sources of secondary waves that are coherent with the primary wave. As they combine, these waves produce a resultant wave which propagates with speed that depends on the properties of the medium. It is well-known that all this leads to a dispersion formula of the usual form.[7,8,38] The refractive index is therefore initially equal to unity, but rapidly rises to its usual value as the steady secondary waves become established. This process is, however, so rapid that there is no way of demonstrating experimentally the departure of the refractive index from its normal value.

2. PHYSICAL CAUSE OF MOLECULAR LIGHT SCATTERING

However, the ability of the secondary waves to interfere with one another, which underlies the above theory of dispersion, leads to the rectilinear propagation of light, which is well-known from Fresnel's discussion. In other words, a plane primary wave should remain plane in the material medium if this medium is optically homogeneous. Optical homogeneity implies that the number of centers in a small volume (i.e., a volume whose linear dimensions are comparable with the wavelength) is proportional to the chosen volume. An infinitesimally thin layer adjacent to the wave front drawn through some particular point in the medium would then be uniformly filled with centers acting as sources of secondary (Huygens) waves. If we divide this layer into Fresnel zones, and procede in the usual way, we can show that the resultant wave propagates rectilinearly, i.e., the secondary waves emitted in lateral directions are removed by destructive interference.

As far back as 1881, Rayleigh discussed the question of light scatterng and showed that forced coherent vibrations could not be responsible for the lateral scattering of a plane primary wave. However, Rayleigh[1] showed that this approach was valid only for a medium consisting of fixed particles. He considered that when particles executing disordered motion are present, there can be no question of a constant phase difference between the vibrations produced in them: these can only be produced by the delaying of the exciting waves propagating with finite speed between the successive layers of the medium. According to Rayleigh, randomly moving particles, i.e., particles in thermal motion, thus become sources of incoherent secondary waves, and can therefore scatter a plane wave in all directions. It is well-known that Rayleigh used these ideas as a basis for the derivation of a formula giving the intensity of scattered light in a homogeneous medium (molecular scattering).

Rayleigh's treatment must, however, be augmented by further considerations. Mandel'shtam[9] showed later that the presence of randomly moving particles does not in itself give rise to incoherent secondary waves if the number of these particles is very large. In such cases, we can again divide the medium into small volumes that are stationary in space and for which the above discussion of the phase distribution of secondary waves is valid. To ensure that the Fresnel construction again leads to rectilinear propagation of a plane wave we need only demand that the number of centers contained in these small volumes be proportional to the small volumes, i.e., the medium must satisfy the optical homogeneity condition formulated above. In precisely the same way, an optically homogeneous medium consisting of random removing molecules should not give rise to the scattering of plane waves. However, a medium consisting of a large number of moving molecules cannot be optically homogeneous even for waves with long wavelengths such as those of light. Smoluchowski[10] was the first to draw attention to the fact that density fluctuations associated with the molecular structure of a medium should give rise to a departure from optical homogeneity. This phenomenon and the associated scattering of light become particularly appreciable near critical points at which the compressibility of the liquid becomes much greater.

The phenomenon of opalescence near a critical point becomes so considerable that it serves as one of the readily observed indicators of the approach of the critical state. Smoluchowski thus gave an explanation of this 'critical opalescence,' and at the same time identified the physics of light scattering by a homogneous medium.

Since these density fluctuations are a direct consequence of the moelcular nature of matter, it is natural to refer to this type of fluctuational scattering of light as *molecular scattering*. We have to remember, however, that the graininess associated with the molecular structure of matter is not in itself sufficient to ensure light scattering in the optical range. The graininess is coarse enough to produce the scattering of short waves (X-rays) since the separation between the molecules is 10^{-8} cm, i.e., it is comparable with the wavelength of x-rays. In the optical range, on the other hand, this medium may be looked upon as homogeneous. It is only when the density fluctuations produce a departure from uniformity in the distribution of vibrating centers that light waves become diffracted by these inhomogeneities in precisely the same way as departures from uniformity on a wavefront (produced by a screen or a diffraction grating) give rise to diffraction whereby waves are deflected from their initial direction of propagation.

Einstein[11] took Smoluchowski's ideas about the role of

fluctuations in scattering as his starting point in a derivation of the scattered light based on the above considerations. His derivation may be referred to as thermodynamic since it does not make explicit use of the molecular description and relies on the fact that deviations from the average density that require work can occur at the expense of the kinetic energy of the molecules. In other words, the most probable deviations are those that involve work of the order of RT per gram-molecule. These considerations suffice for the derivation of the general formula for the scattered light intensity as a function of absolute temperature, the Avogrado number, and the constants of the medium (compressibility and the refractive index as a function of density). A more detailed analysis of the problem (the effect of the shape of the molecules on polarization and intensity, and so on) requires special assumptions about the nature of the electromagnetic fields generated inside the medium by interactions between the molecules, i.e., it involves a more detailed consideration of molecular ideas. Extensions of the Einstein thermodynamic derivation employing molecular kinetics were put forward later by Cabannes, Born, Gans, Raman *et al.* For gases, the formula derived by Einstein is in complete agreement with the original Rayleigh formula. This is so because, for gases, Rayleigh's assumption that the secondary waves are completely incoherent is mathematically equivalent to the diffraction of light by the randomly distributed condensations and rarefactions of the medium that constitute the above density fluctuations. This mathematical equivalence, should not, however, make us blind to the profound physical difference between the ideas of Rayleigh on the one hand and Einstein and Smoluchowski, on the other.

3. POSSIBLE CHANGES IN THE WAVELENGTH OF SCATTERED LIGHT

Thus, in contrast to fluorescence, molecular light scattering produces secondary waves that are mutually coherent and are created by the forced vibrations of electrons in the medium, which are generated by the primary light wave. Density fluctuations cause a departure from the optical homogeneity of the medium, and some of the energy of the primary wave is transported by these secondary waves in all directions, but the wavelength of the scattered waves remains, of course, unaltered.

The following problem arises: is it possible that a change in wavelength on scattering could occur and, if so, what could be the possible physical causes of such change?

In the classical theory that relies on the vibrations of electrons, which we have used so far, one possible cause is the Doppler effect due to the thermal motion of atoms and molecules. In our case, the Doppler effect assumes an exceedingly unusual form which we shall now consider. We showed above that lateral scattering is basically due to the formation of fluctuational inhomogeneities in the medium, so that scattering can be looked upon as the reflection of light by these inhomogeneities. This means that, when the Doppler effect is calculated, we have to consider the velocity of these inhomogeneities and not the molecular velocities proper. It was shown by Mandel'shtam[12] that the expected wavelength change is independent of the form of the perturbation that produces the departure from homogeneity and exclusively on the ratio of its velocity of propagation to the velocity of light and on the angle between the direction of observation and the direction of propagation.

For gaseous media, the speed of the perturbation propagating in the medium by virtue of its elasticity (the velocity of sound) is of the same order as the thermal velocity of the molecules. We thus find nothing unusual in gaseous media, but the situation is different in solids. In the Debye theory of specific heat,[13] any thermal motion in a solid[2)] may be looked upon as an ensemble of elastic waves propagating in all directions with the velocity of sound. From this point of view, molecular scattering of light may be looked upon as the reflection of light waves by the inhomogeneities created in the medium by the elastic waves. In other words, we expand the temperature fluctuations in the density of the medium (which are the physical cause of molecular light scattering) into a set of elastic waves that appear randomly at different points in the medium with different intensities and propagate in all directions with the velocity of sound. In solids, this velocity is much greater than the molecular velocity, especially at low temperatures. The set of such elastic waves transforms, at each instant of time, the homogeneous solid into a set of spatial gratings with all possible periods. Diffraction by these gratings constitutes molecular light scattering. For a given wavelength of light and a given direction of observation (for example, at an angle ϑ to the primary beam), diffraction is due to a particular single set of these spatial gratings moving in opposite directions with the velocity of sound v. Application of the Doppler principle then leads to the conclusion that, instead of a monochromatic wave of frequency ν, two waves should appear with frequencies given by

$$\nu\left(1 \pm 2\frac{v}{V}\sin\frac{\vartheta}{2}\right),$$

where v is the velocity of sound, V is the velocity of light in the medium, and ϑ is the angle between the primary and the scattered waves. This special Doppler effect was formulated by Mandel'shtam in 1918. In a paper published in 1922, Brillouin[14] also considered the scattering of light by sound waves and arrived *inter alia* at the same phenomenon.

The question of a possible change in the wavelength of scattered light can also be approached from another point of view in which we are guided by the ideas drawn from quantum theory.

Any exchange of energy between a quantum of light undergoing scattering and the medium is equivalent in quantum theory to a change in the wavelength of scattered light. Since the discovery of the Compton effect, which revealed the possibility of this exchange in x-ray scattering, there have been frequent attempts to detect a similar phenomenon in the optical range, but all such attempts have ended in failure. The reasons for this are not difficult to see: there is a fundamental flaw in the formulation of these experiments. As is often the case in derivations performed

in quantum theory, our knowledge of the process under consideration is incomplete. We are not, therefore, in a position to conclude what is the probability of a particular process, the possibility of which is predicted by quantum theory. Since the formulation of the correspondence principle by Bohr (and before the advent of the new quantum mechanics), this gap was filled by examining each process from the classical point of view and then transferring the results to the corresponding quantum phenomenona. Here, too, it will be useful to consider from the classical point of view the processes for which it has been suggested that quantal change in wavelength should be investigated. For example, Ross[15] has tried to detect the change in wavelength due to multiple reflections from a mirror or scattering in paraffin (which is equivalent to reflection from paraffin crystallites whose dimensions are relatively large compared with the wavelength). Experiments have been carried out in Frank's laboratory in Göttingen in which the phenomenon under investigation was effectively the reflection of light by a mirror.

These experimenters took the theory of the Compton effect as their starting point, but assumed that the change in wavelength would be numerically much smaller than expected because the energy transfer should occur between a quantum and an atom (and not an electron as in the Compton effect), since light absorption processes rely on the atomic mechanism. Thus, since the mass of the atom is much greater than the mass of the electron, the conditions for energy transfer (derived from the laws governing elastic collisions) are much less favorable than in the Compton effect. Attention was therefore directed toward ways of enhancing the effect (by multiple scattering in Ross' case) or toward the use of more refined optical methods (in which absorption was exploited as a means of observing wavelength changes by Rump[17] in Frank's laboratory). However, the basic flaw in all this was that the light that was observed had undergone regular reflection, which we know can occur only when the coherence of reflected rays is preserved. It is only then that the rays can interfere, and there is only one direction, determined by the laws of reflection, in which bright light corresponding to the interference maximum is observed and rays propagating in all other directions are extinguished altogether. It was explained above that the coherence condition is met by secondary waves if the centers responsible for these waves are sufficiently close to one another, i.e., if volumes with linear dimensions comparable to the wavelength contain large numbers of molecules. The coherence conditions are then still satisfied despite the intensive thermal motion of our molecules, and regular reflection can take place.[3)] The conditions are satisfied on any solid mirror, and reflection is possible. A change in wavelength occurs when the same light waves transfer energy to molecules in the mirror, in which case they become mutually incoherent, lose their ability to interfere, and therefore cease to be regularly reflected. Instead, they are scattered in all directions and are not seen by an observer studying reflected light.[4)] Moreover, we recall that wave interference involves the addition of amplitudes, i.e., the resultant brightness is proportional to the square of the number of radiating centers. On the other hand, if the radiated waves do not interfere, then we have to add the intensities, i.e., the resultant brightness is proportional to the number N of centers. For reasonably large values of N, the brightness of reflected and scattered light is found to be completely incommensurate. However, this does not exclude the possibility that a change in wavelength might be observed on reflection from a mirror. We need only recall that such modified waves must be sought among waves scattered in all possible directions and not in the strong beam of regularly reflected waves.

This *surface* scattering is also due to fluctuation phenomena whereby the smooth surface of a mirror is continuously disturbed by shallow waves of molecular origin, which produce an increase in the surface area of the mirror. The intensity of these waves decreases with increasing surface tension of the surface material. Surface scattering is particularly readily observed on the separation boundary between two liquids near the critical mixing point (Mandel'shtam[17]). It is also amenable to observation on the surface of mercury (Raman and Rambas[18]).

Thus, waves whose wavelengths undergo a change as they interact with matter, and become mutually incoherent as a result, can be observed and investigated in molecular scattering (surface or volume), but not in regular reflection. As explained above, molecular scattering *due to density fluctuations* tends to enhance the intensity of waves propagating in all directions, despite the fact that the individual secondary waves are mutually coherent. Incoherent radiation will also propagate in all directions if it is produced as a result of the interaction of light with the medium. Indeed, incoherent scattering accompanied by a wavelength change was discovered precisely in studies of molecular scattering by Raman and Krishman[19,20] in Culcutta, where they were investigating molecular scattering by liquids, and, independently, by Mandel'shtam and the present author[21,22] in Moscow, in the course of studies of molecular scattering by solids.

4. CHANGE OF WAVELENGTH OBSERVED IN SCATTERED LIGHT

The change in wavelength observed by the above workers may be looked upon as the optical analog of the Compton effect if the latter is understood as energy transfer between light quanta and material systems (atoms and electrons) well away from resonance with the incident light. The mechanism responsible for the phenomena in these two cases, is, however, significantly different. In particular, optical experiments involve only the energy of the light quantum. Accordingly, the result of observations is independent of the direction of scattering, which was confirmed experimentally by Mandel'shtam and the present author who showed that the picture remains the same when light is observed at 60°, 90°, or 120° to the primary beam. Conversely, in the Compton effect, the wavelength is known to be significantly different in different directions.

The phenomenon itself was discovered in studies of the spectrum of light that had undergone molecular scattering. For high enough scattered intensities, the corresponding

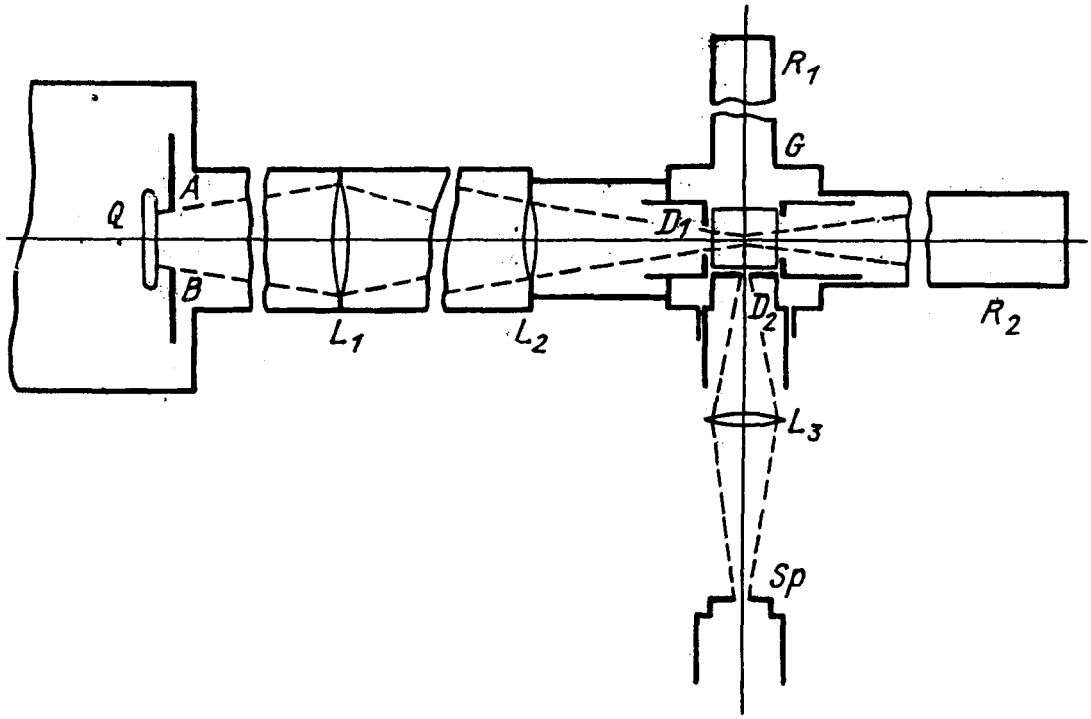

FIG. 1. Principle of the experiment.

spectrograms contained both the lines due to the primary source (mercury lamp) and, for each such line, a group of satellites with the modified wavelength.

The Raman–Krishnan and Mandel'shtam–Landsberg experiments employed similar apparatus. Figure 1 illustrates the apparatus used by Mandel'shtam and Landsberg, in which Q is the source of light (quartz lamp), L_1 and L_2 are lenses that focus the light on the object under investigation, D_1 and D_2 are diaphragms that remove stray light, and L_3 is a lens that projects the visible path of the beam in the scattering body on to the slit of spectrograph Sp. Tubes R_1 and R_2, blackened on the inside, serve as black background and absorber of rays transmitted by the body, respectively. These measures, designed to protect the spectrograph from unwanted rays, are important in quantitative measurements. Not all the precautions are essential when only the detection of the phenomenon is involved.

Wood[23] suggested a somewhat different method that has considerable advantages, especially in the investigation of liquids and gases. In Wood's apparatus (Figs. 2a and b), the mercury lamp is brought as close as possible to the tube that is parallel to the lamp and contains the material under

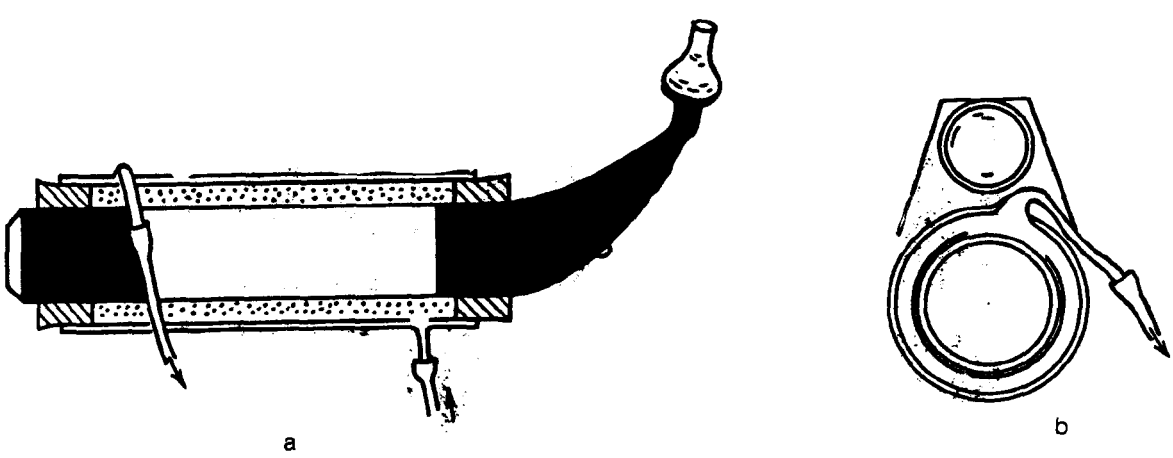

FIG. 2. a—General appearance of vessel containing the material under investigation: b—section through apparatus, showing relative position of its components.

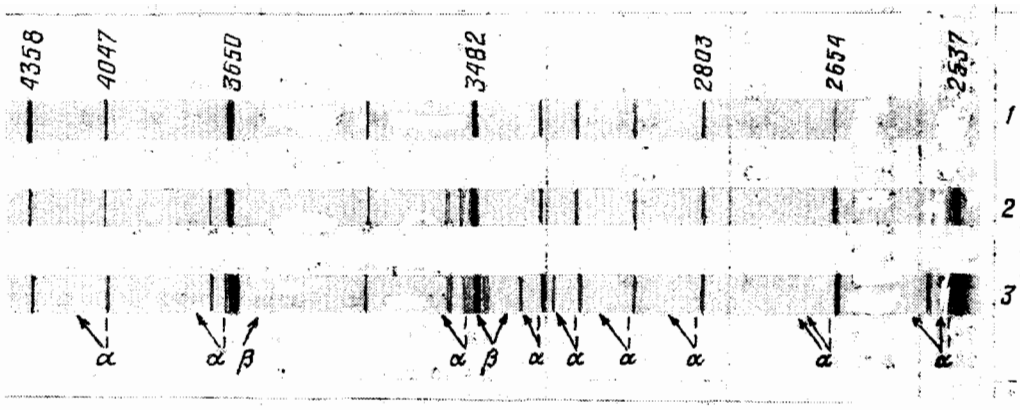

FIG. 3. Spectrogram of light scattered by quartz: *1*—comparison spectrum, *2*—light scattered by quartz at 20 °C, *3*—light scattered by quartz at 210 °C, α—red satellites, β—violet satellites.

investigation. Two additional aluminum reflectors enhance the illumination. Water cooling is used to prevent overheating. A flat wall on the left (Fig. 2a) is used for observations and the opposite blackened end acts as a black background. Blackening near the flat wall excludes unwanted radiation. When the layer of liquid under investigation is thick enough and the spectrograph is carefully adjusted, with the collimator tube parallel to the axis of the tube containing the material under investigation, the spectrograph is protected from unwanted stray reflections. The advantage of this method lies in the much higher incident-light intensity and the considerable thickness of the layer (tube length) that scatters the incident light. The latter fact is particularly significant in the case of liquids and gases, and enabled Wood to reduce the exposure to a few minutes. Spectra investigated by these methods have now been obtained for crystals (Landsberg and Mandel'shtam,[24] Ramakrishma-Rao,[25] and Wood[23]), for liquids (Raman and Krishnan[26], Cabannes,[27] Pringsheim,[28] and others), and for gases (Ramdas[30]).

Figures 3–5 shows some typical examples.

Early work had already revealed that the observed satellites could be grouped into several systems. All lines in each system are characterized by the fact that the *frequency* difference between a given satellite line and the corresponding principal line remains constant across the entire spectrum. This frequency difference $\Delta\nu$ has a particular value for each set of satellites.[21,26,27] Moreover, it was found that, in addition to satellites lying on the long-wavelength side (red satellites), there are much weaker symmetric satellites, the first of which lies on the short-wavelength side (violet satellites). Each system thus consists of a set of satellites with a constant frequency difference $\pm\Delta\nu$ (Refs. 26 and 30). Table I lists the data for quartz and illustrates these results.

The fact that $\Delta\nu$ is a constant provides the basis for a simple theoretical interpretation of the phenomenon. In the language of light quanta, which is particularly convenient in this context, we can describe the observed effect as follows. If the energy of the incident quantum is $h\nu$ and the energy of the scattered quantum is $h\nu'$ then $h\nu - h\nu'$ is the energy transferred to or taken from the scattering material. The question then arises as to whether the difference $h(\nu-\nu')$ is in some way related to the nature of the scattering material.

5. RELATION BETWEEN THE OBSERVED PHENOMENON AND THE NATURAL INFRARED FREQUENCIES OF THE SCATTERING MATERIAL

If the process under consideration is indeed a process of energy transfer between incident light and scattering

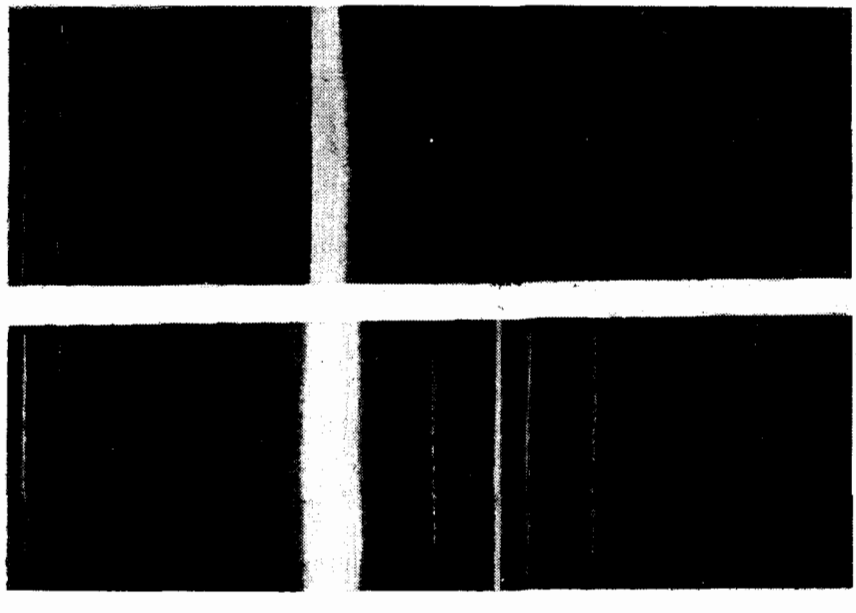

FIG. 4. Spectrogram of light scattered by benzene. The comparison spectrum is shown at the top.

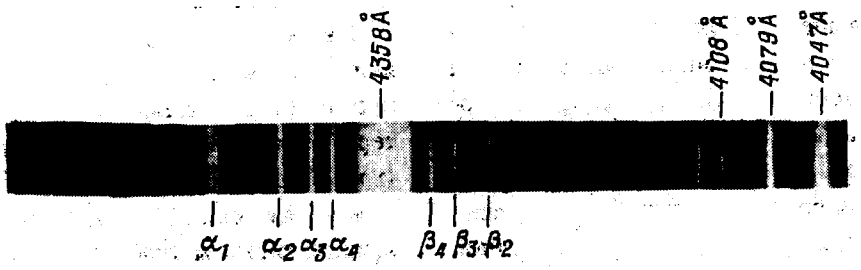

FIG. 5. Spectrum of light scattered by carbon tetrachloride (as reported by Wood): $\alpha_1,\alpha_2,\alpha_3,\alpha_4$-red satellites of the 4358 Å line, $\beta_1,\beta_2,\beta_3,\beta_4$—the corresponding violet satellites.

material then $h(\nu-\nu')=h\nu_k$ is a quantum transferred to, or taken from, the medium. Consequently, $\nu_k=\nu-\nu'$ is the frequency of some periodic processes typical of the medium. The numerical value of $\nu-\nu'$ lies in the infrared range, so that the first step was to try to compare $\nu-\nu'$ with the infrared frequencies of the scattering medium.[21,26,27]

The extensive data now available leave no room for any doubt that the above guess was correct: the frequencies of transferred (received) quanta are indeed the infrared frequencies of the scattering materials.

Table II collects together some examples of the results obtained so far. To facilitate comparison, it lists the values of $\lambda_k=c/\nu_k$ where c is the velocity of light, ν_k is the change in the frequency of the incident light, and λ_i represents the wavelengths corresponding to the infrared frequencies observed by the usual method. We note that, for most bodies, λ_i is determined by absorption methods, so that it corresponds to the absorption maximum. Dispersion theory shows that the position of the absorption maximum is not exactly the same as the natural frequency, but is shifted somewhat toward shorter wavelengths. For crystalline bodies, the necessary correction has been reported by Försterling[31], but Havelock[32] subsequently showed that the correction should be much smaller.

The data assembled in Table I clearly show that it is precisely the natural infrared oscillations, characteristic of the scattering medium, that determine the change in the wavelength observed in the above experiments. The maximum discrepancies between the data reported by different

TABLE I.

Red satellites		Fundamentals	Violet satellites	
$\Delta\nu\cdot10^{-13}$	$\Delta\lambda$, Å	λ, Å	$\Delta\lambda$, Å	$\Delta\nu\cdot10^{-13}$
1,37	88,5	4358,3	—	—
1,41	78,5	4046,8	−73,5	1,37
1,38	62,9	3660,3	−61,0	1,39
1,41	63,5	3650,2	−59,2	1,35
1,42	54,1	3341,5	—	—
1,38	45,8	3131,8	−45,3	1,41
1,40	46,3	3125,6	−45,6	1,42
1,38	42,4	3023,5	—	—
1,42	42,2	2967,3	−41,3	1,43
1,41	40,0	2893,6	—	—
1,40	37,0	2803,5	—	—
1,39	35,5	2752,8	—	—
1,41	33,4	2653,7	−32,2	1,39
1,38	29,7	2536,5	—	—
1,38	29,9	2534,8	—	—
1,38	28,5	2482,0	—	—
$\Delta\nu_{av}=1{,}395\cdot10^{13}$				$\Delta\nu_{av}=1{,}394\cdot10^{13}$
Average value $\nu_k=(1.395\times0.005)\times10^{13}$; the corresponding wavelength is $\lambda_k=21.50$ μm.				

TABLE II.

Material	λ_k, μm	λ_i, μm	Notes	Refs.
Quartz	9.0	8.7		[24–26, 29,35]
	13.5	12.8		
	21.5	20.7		
	38	-	No measurements	
	48	-	available	
	80	-		
	94	-		
	118	-		
Toluene	47.6	-	There are numerous	[29]
	19.4		further infrared	
	16.1	-	lines above this	
	12.8	-	without satellites	
	10.2	13.0		
	9.8	10.2		
	8.3	9.7		
	7.3	8.4		
	6.2	7.25		
	3.43	6.2		
	3.28	3.34		
		3.34		
Benzene	16.5	-	There are a few further	[24, 27–29]
	11.8	11.8	infrared lines without	
	10.1	9.7–10.2	satellites	
	8.5	8.5		
	6.76	6.7		
	6.28	6.2		
	3.21	3.27		
Monochlorobenzene	52.3	-	There are numerous	[29]
	11.7	-	further infrared lines	
	23.9	-	without satellites;	
	16.2	-	some, e.g., 6.94 and 6.77,	
	14.1	-	are particularly strong	
	10.0	9.86**	and are listed here 9 (* and **)	
	9.81	9.86**		
	9.18	9.28**		
	8.64	8.7		
	-	6.94*		
	-	6.77**		
	6.33	6.27**		
	3.26	3.26*		

authors lie within the range of experimental uncertainty. The discrepancy between λ_k obtained in the above way and λ_i found by the method relying on infrared absorption is determined by two factors. First, there is, of course, a contribution due to errors in absorption measurements which frequently have to deal with a maximum that is relatively flat, so that λ_i cannot be found with the necessary precision. In the case of very strong absorption, two closely spaced absorption bands can merge into one. An example of this is the band between 12.5 and 13.5 μm, noted by Coblentz in carbon tetrachloride. Wood's data, obtained by the new method, show that it actually consists of two lines, one at 12.2 and the other at 13.2 μm. Moreover, the discrepancy between the absorption maximum and the natural frequencies, which was noted above, may also be significant. We may therefore consider that reproducible measurements made by the scattering method can provide more reliable and direct data on the natural infrared frequencies of the medium than studies relying on absorption. Moreover, the new method is much simpler and more universal. Infrared measurements encounter extreme difficulties in monochromatization, especially at longer wavelengths. Rubens' residual ray method, which is almost unique in giving reliable results, is exceedingly difficult because it allows monochromatization not an arbitrary wavelength, but only at the wavelengths for which the necessary reflectors have been found. Moreover, new apparatus is required for each new wavelength. The exceedingly small number of measurements made at long wavelengths (50 μm or greater) is directly due to this difficulty. Conversely, in the new method, all infrared frequencies are accessible to observation in a single experiment. To find the long-wave natural frequencies, all we need is to have a spectrometer with sufficient dispersion and, consequently, strong enough scattered light. Wood's method, described above, is of considerable interest in this connection.

Despite the great novelty of the proposed method, it has already yielded some new results in the study of infrared frequencies. It is clear from Table II that it has given us numerous long-wave frequencies. Of course, some of these data will be confirmed by the corresponding absorption measurements. Indeed, in one case, reported by Professor Pringsheim,[5)] this has already taken place. Special measurements of infrared absorption in quartz, performed at Pringsheim's suggestion at the Rubens' laboratory in Berlin, have resulted in the discovery of a new and very strong band at about 38 μm for which the scattering method had already provided some evidence. This band has so far escaped observation because the measuring instrument employed a quartz window that absorbed this part of the spectrum. Absorption measurements became possible when this window was replaced with a paraffin plate, and revealed a new long-wave band of quartz. We note that the 38-μm line found by Pringsheim in quartz is much weaker than the 48-μm line which had been unknown until recently. However, all these attempts to detect an absorption line at 48 μm have failed, which means that either this band is absent altogether or it is exceedingly weak.

The above discrepancy between the intensity of observed satellites and the corresponding absorption band is not exceptional. Experimental data show that many of the infrared frequencies obtained by the absorption method are not seen in scattering spectra. Moreover, some of the strongest absorption bands (for example, the 7.0-μm band of Iceland Spar), have frequently not been seen at all. In other cases, the strongest absorption maxima correspond to very poorly defined satellites in the spectra (for example, 8.5 μm in quartz). On the other hand, the few satellites that have been seen are occassionally very strong and there are certain difficulties in correlating them with the infrared absorption lines (for example, the 9.1 μm in Iceland Spar). It seems to me that, at present, a complete interpretation of these phenomena would be difficult to achieve. The absence or the low intensity of some of the satellites suggests that they are difficult to excite although our system is capable of handling the corresponding natural oscillations. In some cases, however, the absorption maxima may correspond to overtones or combination tones due to the presence of particular fundamental vibrations. The associated satellites should not then appear or, more precisely, the probability of their appearance would be exceedingly low since otherwise we would have the situation where a given incident quantum would give way to two or more infrared quanta—an event of vanishing probability. It is possible that the situation could be altered by changing the excitation conditions (e.g., by using a different exciting wavelength; see below). It is also possible, especially in relation to crystalline bodies, that the excitation of typical molecular vibrations is easier than the excitation of the lattice, which is reasonable on the basis of certain theoretical considerations. This is indicated *inter alia* by the absence of satellites from the scattering spectrum of rocksalt and fluorite.[24] Since they consist ions, these crystals do not have infrared molecular frequencies. They have known absorption bands (60 μm for rocksalt and 35 μm for fluorite) that characterize the vibrations of the lattice as a whole. These conclusions cannot as yet be regarded as final. Evidence against them includes the long-wave satellites of quartz and Iceland Spar, which are hardly vibrations characterizing molecular crystals. From this point of view, there is considerable interest in studies of crystals with the same molecular frequencies (e.g., calcite crystals) and also in parallel studies of crystals and the corresponding solutions.

The appearance of satellites that are not directly related to infrared frequencies cannot be unambiguously explained at the present time either. This applies in the first instance to the satellite corresponding to $\lambda = 9.1$ μm found in Iceland Spar, which can be related to one of the relatively numerous but relatively weak infrared frequencies recorded in Iceland Spar (e.g., $\lambda = 8.8$ μm Ref. 36), especially when the first Försterling correction is taken into account. On the other hand, $\lambda = 9.1$ μm is in good agreement with one of the fundamental frequencies of the CO_3 group, which can be calculated from Born's theory as an optically inactive frequency.

This has been pointed out by Kornfeld[37] who carried out such calculations for the calcite group.[39] The existence

TABLE III. Fundamental frequencies corresponding to infrared bands (λ in μm).

Iceland spar	Sodium nitrate
6,7	7,1
(9,1)	(9,6)
11,4	12,0
14,2	14,4

of such optically inactive frequencies is also supported by experimental evidence. Schäfer *et al.*[40] have performed numerous measurements on the infrared absorption bands of different calcites and were led to the conclusion that the entire set of these bands can be looked upon as a system of combination vibrations consisting of four fundamental vibrations typical of the CO_3 group, which can be predicted from Born's theory. Three of these fundamental vibrations correspond to the three actually observed absorption maxima and the fourth must be chosen so that it can be used to account for all the experimental results. For all the calcites that were investigated (dolomite, cerussite, witherite, magnesite, siderite, and Iceland Spar) this proposed fundamental vibration should correspond to the wavelength of 9.2 μm, i.e., a figure very close to that calculated by Kornfeld (about 8 μm) and almost exactly equal to the frequency measured by the new method.

The optical inactivity of one of the frequencies is explained by the fact that the corresponding oscillations are not associated with a change in the electric dipole moment of the molecule. This frequency does not therefore appear in absorption measurements because the corresponding oscillation is not excited by the alternating field of the light wave. However, it may be considered that if a molecule is made to vibrate with a different, active frequency under the influence of incident light, a continuous vibration will also be excited mechanically, and the result will be the appearance of the combination vibrations indicated by absorption methods. Something similar may be occuring in light scattering. The effect of quanta with energy much greater than is necessary for the excitation of natural oscillations may give rise to considerable perturbations in the molecule. Optically inactive—but intrinsic to the molecule—fundamental vibrations can then arise as a secondary effect. Of course, this explanation is not entirely satisfactory, especially since in the case of Iceland Spar the satellite corresponding to this optically inactive frequency is relative strong. Nevertheless, Pringsheim used these Iceland Spar data in an attempt to explain the appearance of satellites corresponding to the $\lambda=9.6$ μm found in nitrites. Pringsheim[33] assumed that, apart from three natural frequencies known from absorption spectra, NO_3 has a fourth optically inactive frequency whose value can be interpolated by analogy with CO_3. Table III shows that the value $\lambda=9.6$ μm ascribed to this inactive frequency is in reasonable agreement with the CO_3 data which, as we have seen, are well founded.

The relatively limited data on molecular infrared frequencies obtained by the new method are not sufficient for a significant generalization. On the other hand, studies of certain organic liquids have led to the conclusion that the *C–H* bond is characterized by a particular frequency corresponding to $\lambda=3.27$ μm (Ref. 28), which is also indicated by absorption data. However, the new method should allow a substantial expansion of factual information, since it undoubtedly offers a number of advantages as compared with previous methods. They include simplicity and universality, an ability to produce more accurate data in a more direct way, and, finally, the fact that the frequencies obtained by the new method do actually characterize the natural frequencies of matter and are not some overtones or combination tones of fundamental natural oscillations.

6. VIOLET (ANTI-STOKES) SATELLITES AND THEIR IMPORTANCE IN THE THEORY OF THE PHENOMENON

The law illustrated by Table I shows that the frequency ν' of scattered light is given in terms of the incident frequency by the expression $\nu'=\nu\pm\nu_k$ where ν_k is the natural frequency characterizing the scattering system. The observed frequency is therefore the combination frequency that arises when the natural vibrations of a system interact with an extraneous vibration.

From this standpoint, the new type of scattering can be distinguished from classical scattering by referring to it as *combination scattering* (Kombinationsstreung)—a phrase that we shall use from now on.

Experiment shows (Figs. 3 and 5) that, when the violet and red satellites are completely symmetric in the sense of their position relative to the fundamental line, their intensities are very different and the difference increases with the distance from the fundamental line, i.e., with increasing value of the corresponding frequency ν_k. This intensity difference cannot be explained classically: it requires the quantum-mechanical approach. Actually, the red and violet satellites can be given two possible classical interpretations.

Envision a molecule in the form of an electric dipole rotating with constant angular velocity $\omega_k=2\pi\nu_k$ about the y axis that is perpendicular to the direction of the dipole moment. Suppose that the dipole intercepts a plane polarized wave of frequency ν, propagating along the x axis, so that the electric vector lies along the z axis. This wave can be described by $z=A\cos 2\pi\nu t$ and induces in our dipole an electric dipole moment proportional to $A\cos 2\pi\nu t\cos\varphi$ where $\varphi=\omega_k t=2\pi\nu_k t$ is the angle between the dipole and the electric field of the wave (assuming that the dipole initially points in the direction of the z axis). Our dipole is then a source of radiation described by the formula

$$I=kA\cos 2\pi\nu t\cdot\cos 2\pi\nu_k t$$
$$=\frac{kA}{2}\cos 2\pi(\nu+\nu_k)t+\frac{kA}{2}\cos 2\pi(\nu-\nu)t.$$

In other words, the radiated wave does indeed contain waves with frequency $\nu\pm\nu_k$, but the intensities of the two modified waves should be equal.

The other classical interpretation of the modified wavelength of scattered light runs as follows.

Consider a sinusoidal wave $A \sin 2\pi\nu t$ incident on a system executing natural vibrations of frequency ν_k. When the amplitudes are large, the vibrations cease to obey a simple sinusoidal law, since the equation describing the vibrations will not be linear. It is well-known that the superposition of such oscillations produces combination tones with frequencies $\nu+\nu_k$ and $\nu-\nu_k$. These tones are largely analogous to the the sum and difference tones familiar from acoustics, and are obtained when a particular resonator is fed with two waves with frequencies ν and ν_k, respectively. As in acoustics, the necessary condition for them to arise is that the equations are nonlinear. This could occur in the above experiments because, even at normal temperatures, the infrared vibrations can have very large amplitudes. The combination tones can thus explain the presence of the red and violet satellites that are symmetric relative to the fundamental line. However, here again the question of intensity is not satisfactorily answered. The relative intensity of the two satellites should be the same, but experiments show that the violet satellites are much weaker than the red, and can only be observed for the very brightest lines.

The classical interpretation of the red and violet satellites is therefore seen to lead to an unsatisfactory result.

It is therefore natural to turn to the quantum-mechanical interpretation of the observed phenomenon. In terms of the hypothesis of light quanta, the appearance of the scattered light of lower frequency means that some of the energy of the incident photon (namely, $h\nu-h\nu'$) is transferred to the medium in the form of the photon $h\nu_k$ that is typical of it. On the other hand, the reverse process in which a photon is added to the incident photon $h\nu$ and produces a violet satellite of frequency $\nu+\nu_k$ is also possible. This simple treatment was put forward at one time by Smekal[41] who concluded that modified components could appear in scattered light. Smekal's treatment was concerned with isolated atoms, but it obviously applies to our systems as well. In the case of crystal lattices, the frequency ν_k can be the frequency of the natural vibrations of atomic complexes and, perhaps, characterizes the lattice vibrations as well.

It is readily shown that, from the quantum-mechanical point of view, the question of the relative intensity of red and violet satellites does not lead to conflict with experiment. Let us examine this in terms of the hypothesis of light quanta. The same results may be arrived at without resorting to an extreme modification of quantum-mechanical ideas such as the hypothesis of light quanta. Heisenberg and Kramers[42] have given a quantum theory of scattering of radiation by atoms, which is close to the Kramers quantum theory of dispersion, i.e., it is entirely based on the correspondence principle. Like Smekal, they arrive at the conclusion that the scattered radiation contains both the original frequency and the frequencies $\nu+\nu_a$ or $\nu-\nu_e$ if ν_e and ν_a are the frequencies corresponding to the emission and absorption by the atom under consideration. Their method is essentially a translation to the quantum mechanical language of the derivation and formulas obtained in classical theory. In other words, they take as their point of departure the nonlinear equations for the vibrational process, which lead to combination tones. However, the question of the relative intensity of the sum and difference tones receives completely different answers in classical and quantum theories The intensity of classical radiation is determined in quantum theory as the probability of transition from one stationary state to another, so that it depends on the excited stationary states. In Schrödinger's wave mechanics, the explanation of the difference between the red and violet satellites intensities again encounters certain difficulties. According to Schrödinger, the appearance of a particular line with frequency $\nu\mp\nu_k$ is possible only if there are molecules in both the first and second states, A and B, and the transition between these states determines the frequency ν_k. The corresponding line intensities are then determined by the product of the concentrations of the molecules in the two states, i.e., by the same product $N_A N_B$, whether we have in mind a transition from A to B or from B to A, i.e., whether we obtain the combination line $\nu+\nu_k$ or $\nu-\nu_k$ (Ref. 49). Born[59] has noted, however, that the original interpretation given by Schrödinger is not the only possible one. Moreover, for several other reasons, Born prefers the statistical interpretation of the new quantum mechanics in which the relative intensity of the red and violet satellites is as satisfactorily explained as it is from the standpoint of light quanta.

The following elementary discussion will give an idea—not entirely vigorous—of the expected intensity of red and violet satellites. The modified frequencies $\nu\mp\nu_k$ are obtained when light quanta take part in scattering in which there is energy transfer to the scattering centers. The intensity of red and violet satellites can then be regarded, other things being equal, as proportional to the number of centers capable of receiving or giving up a quantum $h\nu_k$. The former include all the centers that are not excited. Moreover, some of the excited centers will be able to receive an additional proportion of energy $h\nu_k$, i.e., they can also contribute to the red satellite. Another fraction of excited centers will give up their energy to radiation in the form of quanta $h\nu_k$ and will undergo transitions to a lower excited state, thus creating the violet satellite.

Of the two periodic processes that can occur in molecules, namely, rotation and vibration, the former is not significant here because the rotational frequencies are too low to explain the observed effects: they can only give rise to a broadening of lines that is comparable with thermal broadening. The vibrations of molecular groups, on the other hand, can be looked upon in the first approximation as harmonic, so that excitated states corresponding to the energy difference $h\nu_k$ are possible.[6)] According to the Boltzmann formula, the number of centers in these states is given by

$$N_1=N_0e^{-h\nu/kT},\quad N_2=N_0e^{-2h\nu/kT},$$

$$N_3=N_0e^{-3h\nu/kT}.$$

The processes that result in the emission of the red and violet satellites are none other than the positive and negative emissions in Einstein's well known derivation.[42] We

shall not introduce a major error if we suppose that the probabilities of the two transitions are equal ($B_m^n = B_n^m$ in Einstein's formulas). The intensity of the red satellites is thus proportional to the number of all the unexcited centers plus one half of all the excited centers, and the intensity of the violet satellites is proportional to half the number of excited centers, i.e.,

$$J_r = K\left(N_0 + \frac{1}{2}N_1 + \frac{1}{2}N_2 + \ldots\right)$$

$$= KN_0\left(1 + \frac{1}{2}e^{-h\nu/kT} + \frac{1}{2}e^{-2h\nu/kT} + \ldots\right)$$

$$= KN_0\left(1 + \frac{1}{2}\frac{e^{-h\nu/kT}}{1 - e^{-k\nu/kT}}\right),$$

$$J_v = K\left(\frac{1}{2}N_1 + \frac{1}{2}N_2 + \ldots\right)$$

$$= KN_0\left(\frac{1}{2}e^{-h\nu/kT} + \frac{1}{2}e^{-2h\nu/kT} + \ldots\right)$$

$$= KN_0\left(\frac{1}{2}\frac{e^{-h\nu/kT}}{1 - e^{-h\nu/kT}}\right).$$

Hence the required intensity ratio is given by

$$\frac{J_v}{J_r} = \frac{1/2\ e^{-h\nu/kT}}{1 - 1/2\ e^{-h\nu/kT}} = \frac{1}{2e^{-h\nu/kT} - 1}.$$

This formula shows that the intensities of the violet and the red satellites should be very different. Our formula, like any other formula in quantum theory, will of course lead to the classical result in the limit. Indeed, when ν is small and T is large, we have $J_v = J_r$, as expected in classical theory. The phenomenon we are discussing was interesting because for values of ν that we encounter experimentally even at ordinary temperatures T, the energy $h\nu$ is close to kT, i.e., the intensity of the violet satellites is appreciable. The intensity of the violet satellites should rise rapidly with decreasing μ, and this is indeed confirmed by experiment. The beautiful photographs taken from Wood's paper[23] and reproduced in Fig. 5 can serve as a clear illustration of the above discussion.

Next, our formula also shows that the violet-satellite intensity is very temperature dependent. Thus, for satellites with $\lambda_k = 21.5\ \mu$m (quartz), the intensity of the violet satellites at normal temperatures ($T = 300$) is about 5% of the intensity of the red satellites. However, when the temperature is raised to $T = 500$, the intensity of the violet satellites should increase by a factor of 3, reaching 15% of the intensity of the red satellites. Strictly speaking, the intensity of the red satellites should also fall somewhat with increasing temperature, but there is an attendant reduction in the number of unexcited centers, which gives rise to the appearance of excited centers. However, this reduction is negligibly small in comparison with existing unexcited centers. We may therefore expect that, as the temperature is raised, the intensity of the red satellites will be unaffected, but the intensity of the violet satellites will become much greater.

The following must, however, must be borne in mind when the corresponding experiment is performed. Such low intensities can only be measured by photographic densitometry. To exclude the possible influence of variations in source intensity, it is best to measure the intensity ratio of the two satellites and also their ratio to the fundamental. However, the fundamental-line intensity does not remain constant with increasing temperature. Indeed, the intensity of unmodified lines depends on the intensity of fluctuations in the medium, which rapidly increases with temperature. The Einstein–Rayleigh formula shows that the intensity of classically scattered waves is proportional to the absolute temperature, and this was confirmed experimentally by measurements on quartz, performed by the present author.[44] On the other hand, the intensity of the satellites should not depend on the fluctuations because the corresponding change in wavelength would lead to the incoherence of this combination scattering. It can therefore take place in all directions, even when the medium is optically homogeneous, and its intensity is unrelated to departures from the homogeneity of the medium, i.e., to the fluctuation intensity.

The complete picture of the temperature dependence of the spectrum of scattered light should therefore consist of the following. The intensity of the fundamental lines increases in proportion to the absolute temperature, the intensity of the red satellites remains constant, and the intensity of the violet satellites increases more rapidly than the intensity of the fundamental lines.

All these theoretical conclusions have been checked and verified experimentally. In the experiments of Mandel'shtam, Leontovich, and the present author,[24,45] light scattered by a quartz crystal at 20 °C and 210 °C was photographed on the same plate on which spectral intensity markers were also deposited. This means that the development conditions were absolutely identical for all the photographs. The exposure time used for hot and cold quartz was the same (105 h). The operation of the lamp were monitored in order to confirm that the unavoidable brightness variations observed over the five-day interval were more or less uniformly distributed for both exposures. The recorded line intensities were compared by examining the photographs with a microphotometer. The conditions under which the hot and cold quartz is photographed do not, of course, have to be identical when only the effect of temperature on the relative intensities of the red and violet satellites is required. However, under the conditions described above, it is possible to verify all the conclusions listed above. Indeed, the results of these measurements are entirely satisfactory. The intensity of the red satellites remains unmodified. The ratio of the fundamental-line intensities lies between 1.40 and 1.87 (for different wavelengths) with a mean of 1.61, whereas the ratio of the absolute temperatures is 1.65. The intensity of the violet satellites rises so rapidly that the increase can be seen even on reproductions (see Fig. 3, middle and right).

Quantitative measurements of this increase are difficult because of the low intensity of the violet satellites, so much so that the corresponding blackening of the plate, even for

the 100-h exposure, is nowhere near the normal blackening of a plate, and the relation between photographic density and light intensity cannot be reliably established. There is no doubt, however, that the intensity increases much more rapidly than one would expect from a linear variation, which is in accordance with the above formula.

Recently, Krishnan[46] has measured the effect of temperature on the intensity of violet satellites in carbon tetrachloride which was well defined (see Fig. 5). However the temperature of carbon tetrachloride cannot be increased too much (in Krishnan's experiments the temperatures were 34 °C and 81 °C, so that the rise in intensity of the violet satellites cannot be considerable. Krishnan examined his spectrograms with a recording microphotometer and concluded that his data indicated an increase in the intensity of the violet satellites.

7. DIFFERENT QUESTIONS RELATING TO COMBINATION SCATTERING

Experiments concerned with the effect of temperature on the intensity of combination scattering provide an experimental confirmation of the frequently canvassed idea that the secondary waves involved in this phenomenon are mutually incoherent. Actually, the fact that the red-satellite intensity is temperature independent shows that the corresponding light propagates in all directions with constant intensity, independently of whether or not the fluctuational departure from homogeneity in the medium is large or small. The discussion presented at the beginning of this review shows, however, that the implication of all this is that the radiation responsible for our satellites constitutes a set of mutually incoherent waves, which is in accord with our ideas about their origin. A well-known confirmation of the fact that combination scattering is incoherent can also be found in the experiments of Bogros and Rocard[47] and Martin[48] who showed that there is no appreciable increase in the intensity of combination lines in a mixture of water and phenol at the critical solution temperature when the classical (coherent) scattering rises very rapidly (opalescence). In these experiments, the fundamental lines could be recorded on the spectrogram in a few minutes whereas the satellites could not be detected even after a three-hour exposure. The conclusion that combination scattering is incoherent is in conflict with the observation described by Raman in one of his first communications.[20] According to Raman, the intensity of combination scattering increases in parallel with the intensity of classical scattering observed in CO_2 in which a cloud is produced by a sudden expansion. However, this observation seems erroneous[49] and has not been confirmed by others. On the other hand, it may be that the conclusion that combination scattering is incoherent is still somewhat premature. Observed facts suggest only that density and concentration fluctuations, which determine the classically scattered intensity, are not directly related to combination scattering.

Conversely, there are several indications that the intensity of combination scattering in a given region is determined by density, i.e., by the number of molecules per unit volume and not by their random distribution. For example, Rambas[29] investigated scattering by liquid and gaseous ether and concluded that the observed satellite intensity was lower in the vapor than in the liquid by a factor of about 300, whereas the corresponding ratio of liquid to vapor densities was 250. The intensity was estimated, approximately, from the duration of exposures producing similar blackening, so that the agreement that was achieved can be regarded as entirely convincing. A similar conclusion, i.e., that the intensity of combination scattering was proportional to density, has also been reported by Daure[50] although his conclusion is based on a very rough estimate of the relevant intensities.

The question of line intensity in combination scattering is of some independent interest and studies of it can provide information about the mechanism responsible for the appearance of the combination lines. As noted above, we are still not in a position to determine why the intensities of some satellites are much greater than the intensity of others, whereas the absorption intensity of the corresponding infrared oscillations will use the reverse situation.

Approximate estimates made by most authors working with liquids show that the intensity of the brightest satellites amounts to 1–2% of the fundamental-line intensity.[23,27,36,50] Measurements on quartz crystals made by Leontovich and the present author[45] have produced a much larger figure. They were performed by photographic photometry and showed that the ratio obtained for the brightest satellites in quartz was about 40%. This result is not inconsistent with the above observations on liquids. Actually, since the intensity of combiantion scattering depends on density, it should be of the same order for liquids and crystals. On the other hand, the fundamental-line intensity due to fluctuations should be higher in liquids than in crystals by a factor of several hundred. The intensity of the red satellite of quartz obtained in these experiments throws further light on something noted by the present author in the course of studies of the temperature dependence of the intensity of light scattered by quartz.[44] It was found that about three quarters of the scattered light rises linearly with temperature whereas the remaining quarter remains constant. It was assumed that this fraction was due to random inhomogeneities in the crystal and not to molecular fluctuations. Current studies show, however, that the combination scattering effect, which was unknown at the time, contributes appreciably to the overall effect. When account is taken of the other satellites and of the reduction in their relative intensity in comparison with visible radiation, the temperature-independent fraction should be responsible for about 40% of the constant component, or about 28% of the total intensity, which is in very good agreement with the above observations. The slight reduction in the relative intensity of the satellite with increasing wavelength of the fundamental line, which was mentioned above, suggests that it would be useful to investigate this phenomenon in a wider spectral range. It is possible that this would throw further light on the mechanism of the phenomenon itself. If we exploit the striking analogy put forward by Pringsheim,[49] we can liken the

phenomenon of combination scattering to the inelastic electron-atom collision of the first and second kind, which is accompanied by energy transfer between the colliding systems. On the other hand, classical scattering corresponds in the first approxiamtion to elastic scattering in which there is only a change in the direction of motion of the bombarding electrons without change in their energy. At the same time, we know that inelastic collisions are possible only when the energy of the incident electrons reaches a certain critical value typical for the target atoms, and that the probability of this process is a function of the energy of the electrons. This excitation function has not as yet been adequately investigated and the corresponding function for the phenomena in which we are interested here is awating its turn.

Another way of investigating the excitation mechanism for particular vibrations is to examine the polarization of the modified and unmodifed lines. The simple Rayleigh theory predicts that the scattered light should be completely polarized in the plane containing the primary and secondary waves. To be specific, let us suppose that this plane is horizontal. Forced vibrations should occur in the scattering medium in the same direction as the vibrations in the exciting light. Even when the latter is natural radiation, all its vibrations are confined to the vertical plane perpendicular to the primary ray. If the primary beam is parallel, and the direction of observation is at right angles, to it, the transverse nature of the light will ensure that only waves cwith vertical vibrations of the electric vector, i.e., rays polarized in the horizontal plane, will propagate in the direction of observation. This conclusion has been confirmed by experiments with classical scattering. However, it became clear later that, for some media, the polarization is not 100%. The reason for this must be sought in the anisotropy of the molecules of the scattering medium. Previous discussions have implicitly assumed that the scattering molecules were isotropic, so that an electric dipole moment parallel to the electric vector of the exciting field was excited with the same intensity in all directions. Since all the electric vectors of the exciting field are confined to the plane perpendicular to the primary beam, the induced electric dipole moments are also confined to this plane, i.e., light propagating in directions perpendicular to the primary beam is plane polarized. For anisotropic molecules, on the other hand, the induced electric dipole moments are different for different directions in the molecules, so that their direction must depend on the orientation of the molecule. The induced electric dipole moments will not therefore be confined to the plane perpendicular to the primary beam. Rayleigh gave this explanation[51] of the fact that light scattered by gases was partially polarized, as first reported in Ref. 52. The phenomenon of partial depolarization was subsequently also observed in liquids in which it can be very substantial. A method of estimating the anisotropy of molecules from the depolarization factor was later developed in numerous papers by Cabannes, Raman, Gans, and others.

Nevertheless, the scattered light is always polarized to a greater or lesser extent. It is then natural to ask: to what extent does this conclusion apply to the new type of scattering. In their early publications,[19,20,26] Raman and Krishnan noted that the new radiation was highly polarized, and saw in this a confirmation of the fact that the observed phenomenon was not fluorescence. This is not a convincing argument because, as noted above, scattered light can be partially polarized (up to 50% or less); on the other hand, polarized fluorescence has been detected in both gases and liquids, and measurements upon it have been reported in numerous recent publications.[53–55] From the standpoint of the mechanism of combination scattering that we presented above, the complete polarization of this scattered radiation is not at all unavoidable. Energy transfer between light and molecules can thus be naturally likened to a new type of emission, so that the polarization of this light should strongly depend on the properties of the excited (emitting) molecule. Nothing unexpected would arise if the different combination scattering lines had different polarizations. This would mean that, for anisotropic molecules, forced vibrations in a particular direction would more readily excite particular natural infrared vibrations, whereas for another direction of the forced vibrations, other infrared frequencies would be more readily excited. Actually, subsequent observations showed that different combination lines had different polarizations that could be greater or smaller than the polarization of the fundamental lines. However, combination lines corresponding to the same infrared vibration, i.e., the same change in the incident frequency, had the same polarization, whatever the fundamental line of the incident light was being examined. For example, Cabannes[56] found that, in the case of benzene, the fundamental lines were 40% polarized, the satellites corresponding to $\Delta\nu=2.98\times10^{13}$ were polarized almost completely (90%), and satellites corresponding to $\Delta\nu=9.2\times10^{13}$ were only 25% polarized. Similar observations were performed subsequently by Raman and Krishnan[57] in benzene and amyl alcohol and by Pringsheim *et al.*[30] in benzene, toluene, carbon tetrachloride, and a nitric acid solution. It became clear that different polarizations (between zero and 90%) corresponded to different satellites (different $\Delta\nu$). However, the polarization of a particular satellite (given $\Delta\nu$) was the same whatever the fundamental line was chosen for investigation. Moreover, in the case of carbon tetrachloride, which is distinguished by exceedingly bright red and violet satellites, the estimated polarization of both is found to be the same, as can be seen from Table IV. When Table IV, which is based on the data of Pringsheim *et al.*,[33] is examined, it must be remembered that the uncertainty in the estimated polarization, especially for the relatively weak violet satellites, may be very considerable because these figures must be regarded as very approximate.

Measurements of the polarization of fundamental lines and satellites in crystals are of particular interest because of the regular distribution and orientation of the molecules.

The data obtained so far are not sufficiently extensive to enable us to draw any particular conclusion. However, it may be that differences between the polarizations of different satellites will provide detailed information about the

TABLE IV.

$\Delta\nu \cdot 10^{13}$	Polarization (%)		
	Fundamental $\lambda = 1016$ Å	Fundamental $\lambda = 1359$ Å	
	Red satellites	Red satellites	Violet satellites
6,05	—	5	15
9,45	6	6	11
13,70	90	90	90
22,70	17	17	—

mechanism responsible for them. For example, Pringsheim has noted that the satellite with $\Delta\nu$ that corresponds to the C–H bond in many organic compounds has the same type of polarization in different compounds.

Generally, it is patently obvious that there are at present more questions than answers in this new field. The basic phenomenon—its physical meaning and interpretation—is undoubtedly clear, but there is an extensive range of controversial and puzzling points that will be cleared up only when more data become available. I have tried to show on the preceeding pages that, in addition to the studies of different materials that may enrich our knowledge of the natural infrared frequencies of molecules, and, perhaps, of the crystal lattices as well, there are many unanswered questions about the excitation of these infrared vibrations, the factors governing their intensity, the polarization of combination lines, and so on.

8. CONCLUSION

It will be appropriate to conclude this paper by returning to the question posed at the beginning of this review.

From the standpoint of the new type of combination scattering described above, the difference between fluorescence and scattering ceases to be as sharp as it seemed heretofore. It is clear that we can have scattering of light in which the forced vibrations of a system combine with its natural vibrations so that the distinction between natural and forced oscillations becomes meaningless. The phenomenon of combination scattering may be looked upon as *additional* fluorescence. In ordinary fluorescence, we can readily observe natural emission for which the molecule is first excited. On the other hand, the residue of the energy (Stokes shift) is not directly emitted, and we can make only more or less plausible assumptions about its fate. In combination scattering, on the other hand, it is precisely this residue that is observed. The energy of natural vibrations, on the other hand, is not directly observed, and it is only numerical data that indicate that there is no doubt that the excited natural emission lies in the infrared. Of course, it is possible to choose objects for which the excited natural emission and the 'residue' will be in a range convenient for observation. The essentially new fact is, however, the excitation of strong infrared vibrations by light whose frequency lies in the distant part of the spectrum (in the ultraviolet). The observed energy transfer between light and matter does not fit at all the framework of conventional classical ideas about resonance. The processes that we encounter here are very close to, if not identical with, the phenomena of positive and negative absorption postulated by Einstein[60] in his well-known derivation of the formula for blackbody radiation. From this point of view, the phenomenon that we have described provides further and not insignificant support for the quantum character of light.[7)]

* First published in UFN in February 1929.

1) This difference occurs when the period of the forced vibration is appreciably different from the natural period of the resonators, which is commonly the case in light scattering. When the two periods are equal, the rate at which stationary states are established depends on the damping of the natural vibrations, and the process probably takes $\sim 10^{-9}$ s. The phenomenon of resonant fluorescence is thus similar to scattering in this respect as well.

2) It is well-known that the extension of these ideas to liquids and gaseous media does not lead to agreement with experiment. This suggests that solids have to be examined separately.

3) Because of this, waves that undergo regular diffraction by the mirror cannot be affected by the thermal motion of the molecules in the mirror (by the Doppler principle). This is a fundamental flaw in one of the experiments by Rump [cf. Z. Phys. **29**, 196 (1924)].

4) We note that the Compton effect should not prevent precise measurements of x-ray wavelengths, as might appear at first sight. Actually, in x-ray spectroscopy, we observe x-rays that undergo regular reflection from a crystal plane, i.e., there is definitely no change in wavelength.

5) Reported at the Sixth Congress of the Association of Russian Physicists, August 6–10, 1928.

6) The subscript **k** will be omitted henceforth for the sake of simplicity.

7) Since this paper was written (December 1928), there have been some two dozen new papers devoted to combination scattering. They could not be included in this review or in the list of references apended hereto. Some of these papers are very interesting but do not contribute anything that would necessitate a significant modification of our text.

1 Lord Rayleigh, Philos. Mag. **12**, 81 (1881).
2 R. W. Wood, Philos. Mag. **23**, 689 (1912).
3 L. Dunoyer, C. R. Acad. Sci. **156**, 1067 (1913).
4 A. Einstein, Ann. Phys. **17**, 132 (1905).
5 W. L. Lewschin, Z. Phys. **32**, 307 (1925).
6 E. Gawiola, Z. Phys. **42**, 853 (1927).
7 E. Esmarch, Ann. Phys. **42**, 1257 (1913).
8 A. Sommerfeld, Phys. Z. **8**, 811 (1905); see also Festschrift für H. Weber, 1912.
9 L. Mandel'shtam, Ann. Phys. **23**, 626 (1907).
10 M. V. Smoluchowski, Ann. Phys. **25**, 205 (1908).
11 A. Einstein, Ann. Phys. **33**, 1275 (1910).
12 L. I. Mandel'shtam, Zh. Russ. Fiz.-Khim. Obshch. **58**, 831 (1926).
13 P. Debye, Ann. Phys. **17**, 88 (1922).
14 L. Brillouin, Ann. Phys. **17**, 88 (1922).
15 P. A. Ross, Proc. Natl. Acad. **9**, 246 (1923).
16 W. Rump, Z. Phys. **29**, 196 (1921).
17 L. I. Mandel'shtam, Ann. Phys. **41**, 609 (1913).
18 C. V. Raman and L. A. Ramdas, Proc. R. Soc. London **108**, 561 (1925); **109**, 150, 272 (1925).
19 C. V. Raman and K. S. Krishnan, Nature (London) **121**, 501 (1928).
20 C. V. Raman, Indian J. Phys. **11**, 1 (1928).
21 G. S. Landsberg and L. I. Mandel'shtam, Naturwissenschaften **16**, 551 (1928).
22 G. S. Landsberg and L. I. Mandel'shtam, Zh. Russ. Fiz.-Khim. Obshch. **60**, 535 (1928).
23 R. W. Wood, Philos. Mag. **6**, 729 (1928).
24 G. S. Landsberg and L. I. Mandel'shtam, Z. Phys. **50**, 789 (1928).
25 I. Ramakrishna-Rao, Indian J. Phys. **11**, 131 (1928).
26 C. V. Raman and K. S. Krishnan, Indian J. Phys. **11**, 399 (1928).
27 J. Cabannes and P. Daure, C. R. Acad. Sci. **186**, 1533 (1928).
28 P. Pringesheim and B. Rosen, Z. Phys. **50**, 741 (1928).
29 L. A. Ramdas, Indian J. Phys. **111**, 131 (1928).

[30]G. S. Landsberg and L. I. Mandel'shtam, C.R. Acad. Sci. **187**, 109 (1928).
[31]K. Försterling, Ann. Phys. **61**, 577 (1920).
[32]T. H. Havelock, Proc. R. Soc. London **105**, 488 (1924).
[33]A. Carelli, P. Pringesheim, and B. Rosen, Z. Phys. **51**, 511 (1928).
[34]K. S. Krishnan, Nature (London) **122**, 650 (1928).
[35]C. E. Bleeker, Z. Phys. **50**, 781 (1928).
[36]F. Mutossi, Z. Phys. **48**, 616 (1928).
[37]H. Kornfeld, Naturwissenschaften **16**, 653 (1928).
[38]P. P. Ewald, Fortschritte der Chemie, Physik und Physikalischen Chemie, XVIII, 8.
[39]H. Kornfeld, Z. Phys. **26**, 205 (1924).
[40]C. Schäfer, C. Bormuth, and F. Matossi, Z. Phys. **39**, 681 (1925).
[41]A. Smekal, Naturwissenschaften **11**, 873 (1923).
[42]H. A. Kramers and W. Heisenberg, Z. Phys. **31**, 681 (1925).
[43]A. Einstein, Z. Phys. **18**, 121 (1917).
[44]G. S. Landsberg, Z. Phys. **45**, 442 (1927).
[45]G. S. Landsberg and M. Leontowitsch, Z. Phys. **53**, 439 (1929).
[46]K. S. Krishnan, Nature (London) **122**, 650 (1928).
[47]A. Bogros and J. Rocard, C. R. Acad. Sci. **186**, 1833 (1928).
[48]W. N. Martin, Nature (London) **122** (1928).
[49]P. Pringsheim, Naturwissenschaften **16**, 605 (1928).
[50]P. Daure, C. R. Acad. Sci. **186**, 1833 (1928).
[51]Lord Rayleigh, Philos. Mag. **35**, 373 (1918).
[52]R. J. Strutt, Proc. R. Soc. London **94**, 453 (1918).
[53]F. Weigert, Verh. Phys. Ges. **23**, 100 (1920).
[54]G. Schmidt, Phys. Z. **23**, 100 (1920).
[55]S. J. Vavilov and W. L. Lewschin, Z. Phys. **16**, 135 (1923).
[56]J. Cabannes, C. R. Acad. Sci. **187**, 651 (1928).
[57]C. V. Raman and K. S. Krishnan, Nature (London) **122**, 169 (1928).
[58]G. S. Landsberg, Z. Phys. **43**, 772 (1927).
[59]M. Born, Naturwissenschaften **16**, 673 (1928).
[60]A. Einstein, Verh. Deutsch Phys. Ges. (1917).

Translated by S. Chomet