Demonstration of the acoustic Doppler effect

V. V. Maĭer and R. V. Maĭer

V. G. Korolenko Glazov Pedagogical Institute, Udmurtiya

(Submitted 27 September 1990; resubmitted after revision 29 November 1990)
Usp. Fiz. Nauk **161**, 149–153 (March 1991)

The acoustic Doppler effect is of course the change in the frequency of sound perceived by a detector when the detector and the source are in relative motion in an elastic medium.[1] The frequency of the sound source, ν_0, is related to the absolute change ($\Delta\nu$) in the sound wave perceived by the detector by the approximate equation $\Delta\nu = (\nu_0 v/c)\cos\alpha$, where c is the sound velocity in the medium, v is the velocity of the detector with respect to the source, and α is the angle between the sound propagation direction and the direction in which the detector is moving. An important point here is that the motion of the source and the motion of the detector with respect to the medium are not equivalent. When the velocities of these motions are low, however, the distinction between the Doppler frequency shifts can be ignored, since it is determined by a small quantity of second order with respect to the ratio of the source velocity (or of the detector velocity) to the sound velocity.

The demonstrations of the Doppler effect which are customarily recommended[2] are based on direct auditory perceptions of the audience. These perceptions are frequently false. The beats which arise during the superposition of waves from sources moving in different velocities, and which are also frequently used to demonstrate the Doppler effect, can be explained not only in terms of a Doppler frequency shift but also in terms of the motion of an interference intensity distribution with respect to the detector. For this reason, the only way to demonstrate convincingly and clearly the acoustic Doppler effect is to make use of modern facilities for classroom experiments, which make it possible to measure objectively a small frequency shift of sound.

Figure 1 shows a schematic diagram of the apparatus which we are proposing. The source of sound is a fixed dynamic loudspeaker *1* with a power of 0.5–1 W, connected to a GZ-33 sonic-frequency generator *2*. The frequency of the source of vibrations is determined by a ChZ-33 digital frequency meter *3*. The sound is detected by a DÉMSh-*1* microphone *4*, which is connected by shielded cable *5* to a fast-response, narrow-band frequency meter *6*, which is intended for measuring the Doppler frequency shift. The microphone is positioned nearly at the end of a duralumin pendulum shaft *7*, which is 0.5 m long. It can be rotated around the shaft. The rocking axle of the pendulum is made from a pair of conical sliding bearings and is mounted in a holder *8*, which is, in turn, attached to the rod *9* of a standard ring stand. A tin clamp *10* on the pendulum shaft makes it possible for electromagnet *11*, connected to power supply *12*, to hold the pendulum in a deflected position. An opaque plate *13*, of length $d = 50$ mm, attached to the lower end of the pendulum makes it possible to measure the maximum velocity of the microphone. As the pendulum passes through its equilibrium position, this plate blocks, for a certain time interval τ, the light beam emitted by light-emitting diode (LED) *14*, which is connected to power supply *15*. On holder *16*, opposite the LED, is a photodiode *17*. The output signal from this diode goes to a timer consisting of a quartz oscillator *18*, with a frequency of 10 kHz, with a switching device and a three-place pulse counter *19*. The error of the time measurements by this meter is 10^{-3} s. The velocity of the microphone at the lowest point of its trajectory is calculated from $v = dl_{\text{pend}}/(\tau l_{\text{pl}})$, where l_{pend} and l_{pl} are the distances from the pendulum rocking axle to microphone *4* and plate *13*, respectively. The ring stand with the pendulum is placed on a table *20* with a pointer *21* for adjusting and measuring the angle (α) between the propagation direction of the sound wave and the velocity of the microphone near the equilibrium position. This table can be rotated with respect to a fixed scale *22*, marked in angular degrees.

Figure 2 is a schematic circuit of the fast-response, narrow-band frequency meter. The output signal from the microphone, BM1, is amplified by operational amplifiers DA1 and DA2. After a conversion into square pulses by buffer elements DD1.1 and DD1.2, this signal is sent to univibrator DD2. The square pulses obtained at the output from this univibrator have a length which is independent of the sound intensity and which is determined by the parameters of the time-setting circuit R8, C3. This approach is necessary so that the instrument will respond to changes in only the sound frequency. The values of R8 and C3 are chosen such that the length of the pulses from the univibrator is approximately equal to half the period of the sound in the working range. These pulses go to a parallel oscillator circuit L1, C4, whose coil is wound around a ferrite core 8 mm in diameter and 30 mm long. This coil consists of 500 turns of PÉL 0.29 wire. The working frequency of the instrument, of the order of 4.63 kHz, is at the middle of the right-hand branch of the resonance curve of this circuit. This oscillator circuit can of course be made adjustable by, for example, varying the inductance of the coil. It would then become possible to select some "all-purpose" value of the working frequency. This value should not, however, be in the interval 4–5 kHz, since the microphone recommended has a sensitivity peak in this interval. It was verified experimentally that the working region of the resonance curve of the circuit is essentially linear over the range of Doppler frequency shifts corresponding to velocities from 0 to ± 2 m/s. The voltage from the oscillator circuit is rectified by diode VD1 and filtered by cell C6, R13. It then goes to the inverting input of amplifier DA3. The noninverting input of this amplifier receives a constant voltage from a variable or trimmer resistor R19. The size of this resistance determines the position of the working point on the resonance curve of the circuit. It is selected in the course of the adjustment of the instrument. When a voltmeter is

 0038-5670/91/030262-03$01.00

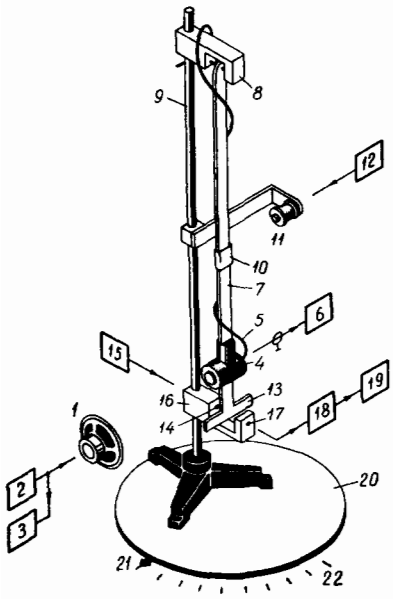

FIG. 1.

connected to the output of operational amplifier DA3, one obtains the narrow-band frequency meter desired.

Since the velocity of the microphone and thus the sound frequency which the microphone perceives change fairly rapidly as the pendulum vibrates, the voltmeter must have a fast response. An oscilloscope would be a suitable fast-response voltmeter; another possibility is a modern plotter. However, we find that a voltmeter based on a linear gas-discharge display is preferable. This type of voltmeter is in the circuit in Fig. 2. Display unit HG1 is connected in the collector circuit of transistor VT1, whose base receives a constant voltage from the output of amplifier DA3. Beside the display device, whose working length is 100 mm, is a ruler marked in millimeters. The resistances of trimmer resistors R14 and R15 are chosen in such a way that with switch SA1 in one position the sensitivity of the frequency meter is (on the ruler scale) 1 Hz/cm, while in the other position it is 2 Hz/cm. Variable resistor R21 is used to zero the instrument.

The following sequence of steps is recommended for operating this experimental apparatus.

Explain the operating principle of a narrow-band frequency meter. Point out the functional units: The limiting amplifier, the device which generates pulses of fixed amplitude and fixed shape with the frequency of the acoustic signal, the oscillator circuit, the detector, the low-pass filter, and the fast-response voltmeter.

Turn on the sonic-frequency generator, the digital frequency meter at the output of this generator, and the narrow-band, fast-response frequency meter. Demonstrate the linearity of the scale of the latter instrument by varying the

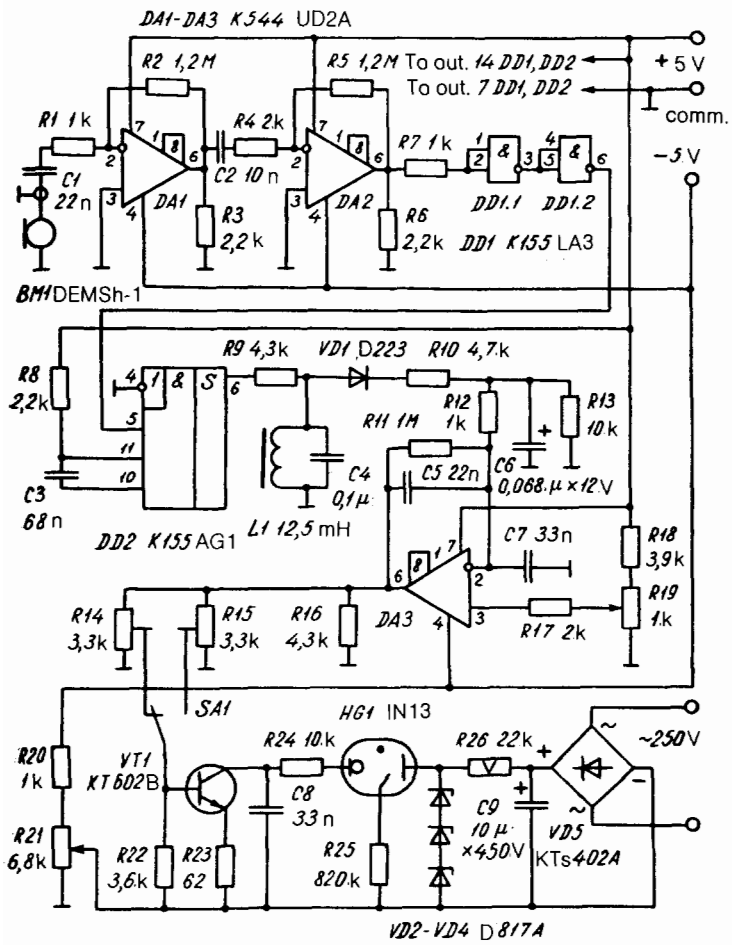

FIG. 2.

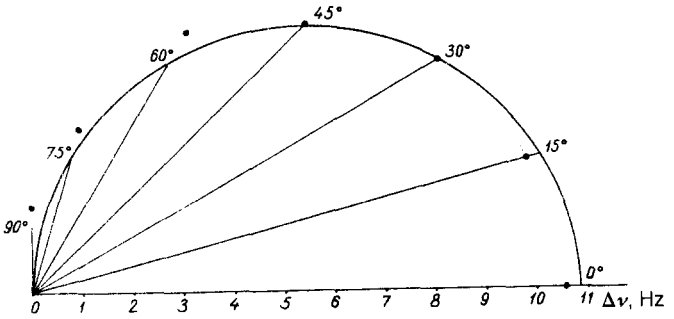

FIG. 3.

frequency of the sound. State that the error in the measurements of frequency shifts by this instrument is no worse than 5%. Demonstrate, through an abrupt but not large change in the sound frequency, that the digital frequency meter, despite its high precision, is incapable of detecting a Doppler frequency shift quickly. Turn down the sound volume to demonstrate the finite sensitivity of the narrow-band frequency meter in terms of intensity. Explain that when there is a standing sound wave in the working volume the microphone may happen to lie in a minimum so deep that the frequency meter does not perceive a signal.

Turn on the power supply for the electromagnet, the quartz oscillator with the switching device, the pulse counter, and the LED. Demonstrate the process of measuring the microphone velocity, and report the error of these measurements, which is no higher than 1%.

Put the pendulum with the microphone in motion in such a way that the pendulum first approaches the loudspeaker and then moves away from it. Demonstrate the Doppler increase and decrease, respectively, in the frequency of the sound. If necessary, carry out measurements which confirm the Doppler effect at a quantitative level.

Rotate the vibration plane of the pendulum with the microphone in such a way that the angle between the velocity of the microphone at the lower point of its trajectory and the propagation direction of the sound wave increases from 0 to 90°. Demonstrate that the Doppler frequency shift decreases monotonically to zero in the process.

Figure 3 shows some results found in an experiment of this type, along with a theoretical curve.

Leaving the microphone at rest, move the loudspeaker with respect to the microphone. Demonstrate that the result is, within the experimental error, the same frequency shift as in the case in which the microphone is in motion.

Unless you attempt to get into quantitative estimates, these experiments will take no more than a few minutes of lecture time. They will demonstrate the existence and features of the acoustic Doppler effect in a highly convincing way.

[1] G. S. Landsberg, *Optics* [In Russian], Nauka, M., 1976, pp. 433–436.
[2] V. I. Iveronova (Ed.), *Lecture Demonstrations in Physics* [In Russian], Nauka, M., 1972, pp. 235–236.

Translated by D. Parsons