Desorption stimulated by electronic excitations

V. N. Ageev, O. P. Burmistrova, and Yu. A. Kuznetsov

A. F. Ioffe Physicotechnical Institute, Academy of Sciences of the USSR, Leningrad
Usp. Fiz. Nauk **158**, 389–420 (July 1989)

The methods and the experimental technique for investigating desorption stimulated by electronic excitations (DSEE) under electron and photon irradiation of the surface of a solid are described. The most general experimental results of DSEE research on adsorption systems with different kinds of bonding are systematized. The basic DSEE models involving single- and multi-electron excitations are discussed as well as the effect on the characteristics of DSEE of relaxation of excitations as a particle is moved away from the surface. Various applications of methods based on DSEE for studying the condition of the surface of a solid and the processes occurring on it are described. The prospects of predicting stability under irradiation of adsorption systems and film coverings when their electronic subsystem is excited are discussed.

1. Introduction. Irradiation of the surface of a solid with electrons or photons can be accompanied by desorption of charged and neutral particles: positive and negative ions, atoms and molecules in the ground and in excited states. Desorption can both result from thermal heating of the surface of the solid by the irradiation flux or from direct transfer of the potential energy of electronic excitation into the kinetic energy of the desorbed particles. Below we shall discuss only desorption directly stimulated by electronic excitations (DSEE). Ever-growing attention has been paid to the latter in recent years.[1,2] This involves the need to understand the mechanism of this phenomenon to solve many fundamental problems of physics and chemistry of surfaces, and also the important role, often negative, that DSEE plays in modern technology and in the development of quantitative methods of surface analysis.

The DSEE phenomenon is observed in many electrovacuum instruments that use electron and photon fluxes. Here it is often difficult to distinguish their contribution to desorption, since the irradiation of the surface of a solid with electrons can yield photons and vice versa. In particular, DSEE can elevate the pressure of the residual gases in vacuum devices, e. g., contaminate the hydrogen plasma in thermonuclear reactors, lead to erroneous pressure measurements by ionization manometers, give rise to false peaks in mass spectra, initiate vacuum breakdown, increase the number of multielectron scintillations in electrooptical converters, increase the degradation of various electron emitters, etc.[3,6] DSEE can substantially alter the composition of a solid surface when one irradiates with electrons or photons to analyze it, as happens in the currently most widely employed methods of electron spectroscopy, electron microscopy, and electron diffraction.[7,8] Accordingly, one must bear this phenomenon in mind to use these methods correctly. Excitation of the electronic subsystem of the surface can arise from laser action, ion bombardment, and even in the process of mechanical failure of the solid. Hence DSEE can play an important role in the erosion of surfaces in these processes.[9,10] In particular, DSEE can cause degradation of mirrors in laser optics[9] and ion emission in secondary-ion mass spectrometry.[10]

On the other hand, DSEE is a direct method of diagnostics of radiation stability of solid surfaces upon excitation of their electronic subsystems. Understanding of the nature of this phenomenon can facilitate elucidation of the mechanism of defect formation in the bulk of a solid upon decay of electronic excitations and can correspondingly indicate the pathway for improving the radiation stability of materials.[11–13] Very importantly, one can obtain by DSEE direct information on the parameters of motion of desorbing particles, which is extremely important for reconstructing the repulsive potentials and their relaxation from the experimental data.

Since the mechanism of DSEE involves electronic transitions at the surface, study of DSEE is necessary for the further development of the theory of chemisorption and heterogeneous catalysis—phenomena caused by the redistribution of electron density between the adsorbed particles and the surface of the adsorbent.[14–17]

One must also know the laws of DSEE for developing the scientific bases of electron and x-ray lithography—very important processes in modern microelectronics.[8,18,19]

Already today the methods of surface analysis based on DSEE enable one to obtain unique information on the direction of binding of adsorbed particles to a surface, on the geometric structure of adsorbed molecules, and lifetimes of electronic excitations at a surface.[18–21] We should especially note that these methods are the most "surface-oriented" of all the methods of surface diagnostics, since they allow analyzing the particles solely in the upper monoatomic layer.

Although DSEE studies have already been conducted over several decades, only in recent years has considerable progress been made in understanding the mechanism of this phenomenon. It is based on the electronic excitation of the adsorption bond corresponding to a repulsive redistribution of the electron density between the adsorbed particle and the surface. The limiting stage of desorption is the relaxation of the electronic excitation, which can return the particle being desorbed to the surface.

A considerable number of reviews has been devoted to the DSEE phenomenon.[14,22–25] Therefore we shall pay the major attention in this review to the studies of greatest significance, as we see it, for understanding the mechanism of DSEE, and for applying DSEE to study various processes at a surface, as well as to studies that have appeared after the publication of the most recent reviews.

2. Experimental technique and methods of study. Two fundamental possibilities exist for studying DSEE: 1) direct re-

 0038-5670/89/070588-17$01.80

cording of desorbed particles; 2) detection of changes in any surface properties in the process of irradiation: work function,[26,27] escape of ions in DSEE,[28–30] magnitude of Auger peaks,[7,31–33] and intensity of reflections in the low-energy electron diffraction pattern.[34] Naturally the former possibility is the more promising, since it enables one to study directly the properties of the desorbing particles. However, owing to the smallness of DSEE cross sections, to realize it one requires a rather complicated special apparatus that enables measuring small ion currents. The latter possibility, although experimentally realized considerably more simply, does not allow gaining unequivocal information on DSEE, since the properties of the surface can change upon irradiation, not only owing to desorption of particles, but also owing to dissociation of adsorbed molecules,[35] disordering of the adsorbed layer,[36] and transition of particles into new adsorbed states.[23]

However, if we can neglect these processes and the desorption cross section Q does not depend on the concentration of adsorbed particles, then one can find the magnitude of Q from the dependence of the change in magnitude of any characteristic β of the desorbed layer on the time t of irradiation of the surface with the flux ν according to the relationship

$$\ln \beta = -\nu Q t.$$

2.1. Methods of measuring the ion component of DSEE. Let us discuss the methods of direct measurement. The simplest way to study the desorption of positive ions involves using a hemispherical energy analyzer with a retarding electric field,[28,37,38] which allows one to measure the energy distributions of the desorbed ions, to cut off the electrons scattered by the target, and the ions formed as a result of ionization of the gas in the volume of the device. Mass analysis of the desorbed ions is usually performed with mass spectrometers. To measure the positive ions one uses sector magnetic static mass spectrometers,[39,40] quadrupole mass analyzers,[41,42] and time-of-flight mass spectroscopes,[3,43,44] and to detect negative ions—sector magnetic static mass spectrometers,[45,46] and quadrupole mass spectrometers.[47,48] Mass spectrometers possess high sensitivity, especially in the single-ion-counting regime. However, owing to the narrow entrance angle of the ions into the mass spectrometer and the loss of ions in passing through the mass spectrometer, the measurement of the absolute desorption cross sections using them involves considerable difficulties. Time-of-flight mass spectrometers are especially convenient when one must simultaneously measure ions over a broad range of masses, and quadrupole mass spectrometers in analyzing ions over a broad range of energies. To analyze ions both in mass and in energy, and also to determine the absolute yield of ions, it is convenient to combine mass spectrometers with hemispherical energy analyzers having a retarding electric field.[49,50] Figure 1 shows a diagram of such an instrument.[50] A small fraction of the ion current through the aperture in the ion collector passes into the mass analyzer and is analyzed for mass. If a ribbon is used as the target, then to improve the homogeneity of the retarding electric field one can use a semicylindrical system of electrodes. This improves the resolution of the analyzer in the normal component of the energy (in the plane perpendicular to the axis of the cylinders). However, it yields no information on the tangential component along the ribbon.[51]

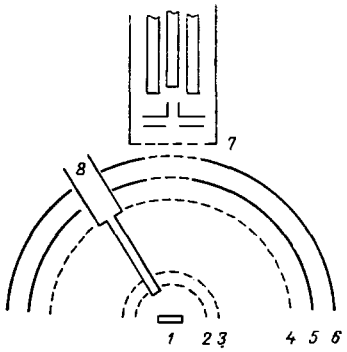

FIG. 1. Diagram of a mass spectrometer combined with a retarding electric field.[50] *1*—target, *2–4*—grids, *5*—ion collector, *6*—shield, *7*—quadrupole mass spectrometer, *8*—electron gun.

To analyze the ions in energy, dispersive energy analyzers have been used, in particular, of the cylindrical-mirror type,[52] which have a high resolution and sensitivity. However, in using such analyzers it is difficult to determine the absolute yield of ions. In certain studies the energy analysis of ions using an energy analyzer with a cylindrical mirror has been combined either with ion analysis in a magnetic field,[53] or with ion analysis by time of flight,[54] which enabled obtaining data on the mass of the ions.

In analyzing the energy distribution of the ions, one must take account of the contact potential difference between the target and the electrode retarding the ions or the entrance slit of the energy analyzer, as well as the inhomogeneity of their surfaces with respect to work function. The contact potential difference leads to a shift in the energy distribution in the energy scale, while inhomogeneity of the surface of the electrodes with respect to work function can alter the form of the energy distribution in the low-energy region.[21]

Uniform irradiation of the surface with electrons and photons is important. Inhomogeneityof the intensity of irradiation over the surface of the target can lead to complex hinetic dependences of the desorption, to false estimates of the cross sections, and in particular, to an apparent dependence of the cross sections on the concentration of the adsorbed particles.[55,56] Additional difficulties arise in studying photostimulated desorption (PSD), which it is convenient to excite with synchrotron radiation, as this enables one to obtain intense photon fluxes with smoothly varying quantum energy. In the region of the PSD threshold one must take account of the possible excitation of desorption involving harmonics of the fundamental frequency of the radiation, which are usually present in the fluxes at the output of the monochromator.[57] When measuring the ion yield as a function of the photon energy one must know the dependence of the intensity of the photon flux on the photon energy. Special methods have been developed to take these effects into account.[58]

The angular distributions of the ions in DSEE can be obtained either by amplifying the ion fluxes with microchannel plates and visualizing the spatial distribution of the ion currents on a fluorescent screen[59] or by measuring the spatial distribution of the ion currents by using ion detectors movable with respect to the specimen and having a narrow entrance aperture,[60,61] or conversely, by rotating the specimen along with the irradiation source with respect to the

detector.[62] The chief advantage of an apparatus of the latter type is its ability to measure the relative intensities of the ion currents as a function of angle, to increase the signal/noise ratio by using a stroboscopic technique, and also to determine the mass and energy of the desorbed ions by using mass spectrometers and energy analyzers as the ion detectors.

Moreover, in this variant of the measurements one need not compress the pattern of angular distributions, as is done in the former variant, at large polar angles of desorption owing to the limited dimensions of microchennel plates. However, the use of this technique requires considerable time for obtaining the pattern of angular distributions of the ions. Large irradiation times of the target can alter the state of the adsorbed layer during the time of experiment. Therefore it is desirable to compare the angular distributions obtained by both methods.

2.2 Direct measurements of DSEE of neutral particles face considerable difficulties. Therefore correctly done studies of the neutral component of DSEE have appeared only in recent years. This involves the fact that, although the DSEE cross sections of neutral particles exceed those of ions by factors of tens or more, to record neutrals one must first ionize or excite them, whereas the probability of these processes amounts to $\sim 10^{-4}$. Correspondingly, the sensitivity of a recording instrument for neutrals must be at least 10^3 times greater than for ions. Moreover, in studying DSEE of neutral particles the problem arises especially sharply of excluding thermodesorption occasioned by the extra heating of the surface by the flux of exciting radiation.

In the case of DSEE of ions, as a rule, thermodesorption does not contribute substantially to the ion currents, since the surface ionization of even the alkali metals requires heating the surface to several hundred degrees.[63] However, thermodesorption of neutral particles can occur at an appreciable rate upon raising the temperature of the substrate by several tens of degrees. Therefore the power of the exciting radiation must be as small as possible. Naturally this reduces the sensitivity of recording the DSEE of neutrals.

Usually one uses various temperature transducers to monitor the constancy of the surface temperature, e.g., thermocouples. However, owing to the presence of a temperature gradient over the surface of the specimen and the lag in establishing it, such monitoring is not effective enough. One can decide more reliably on the influence of surface heating by the irradiating flux on the DSEE from the kinetic dependences of the desorbed flux of neutrals[64] or from their energy and angular distributions.[62,65,66]

The methods used for recording neutrals can be classified into two groups; 1) those based on ionizing the particles; 2) those based on recording the excitation of the neutral particles.

The most widely employed method of ionizing the neutral particles in DSEE is ionization by electron impact in the ion sources of mass spectrometers[62,65–73] having the targets arranged in their direct-view region. Owing to the narrow input aperture of the ion sources, one can rotate the target and the source for irradiating the surface to study with mass spectrometers the angular distributions of the desorbed neutrals,[62,66] while measuring the time of flight of the neutrals from the target to the ion source to study their energy distributions.[65,66,73] To distinguish the signal of the neutrals in DSEE from the background of particles of residual gas having the same mass-charge ratio, one can use amplitude modulation of the irradiating flux with synchronous detection of the signal at the output of the mass spectrometer.[62,65–67,69–71] To record radicals it is important to establish a single-flight recording regime, since radicals can interact with the gas adsorbed on the inner walls to cause an increase in pressure. To diminish this effect it has proved useful to use a special glass chamber in the region of the source of the mass spectrometer.[62,65–67] The lack of measures to suppress this effect in the early studies could have had the effect that the pressure increase observed there in DSEE might result from secondary processes.[6,74,75] The chief defect of this method of recording neutrals is its relatively low sensitivity owing to the small probability of ionization of the particles by electrons in the gas phase.

One can substantially increase the sensitivity of recording (up to a factor of 10^4) by using detectors based on surface ionization to ionize the neutrals.[64] A defect of this method of ionization is its selectivity, since high efficiency of ionization is attained only for substances having a low ionization potential, such as, e.g., the alkali and alkaline-earth metals and their compounds, and also substances with high electron affinities such as, e.g., the halogens.[76]

The ionization of neutrals can be performed with a laser. In this case one can obtain information on the rotational states of the desorbed molecules and on their kinetic energy.[77–79] Upon taking into account the resonance character of photon ionization and the large intensity of laser radiation, we can assume that this method of ionization will prove in the future to be highly effective and will allow obtaining unique information on the state of the desorbed neutrals.

If the neutrals leave the surface in the excited state, then they can be detected by monitoring the current of electrons ejected from a collector[38,80–84] or the spontaneous radiation accompanying their deexcitation.[85–93]

A defect of the former method is the uncertainty of the chemical nature of the detected neutrals and the impossibility of detecting neutrals having an excitation energy lower than the work function of the collector. Moreover, in this method complications arise in interpreting the data since one must take account of the contribution to the electron current to the collector made by the photoelectrons.[80–82]

In the latter method one can decide on the nature of the neutrals by noting the character of the spontaneous-emission spectrum. Three types of spectra are observed: discrete lines of free atoms, broader lines of free molecules, and the continuous luminescence of solids. The position of the spectral lines allows one to identify the chemical nature of the desorbed particles. The spectral dependence of the emission intensity is studied by using monochromators. Here, to diminish the contribution of radiation from the solid[85,86,91] and to diminish the Doppler broadening of the lines,[88,90] the radiation is collected at a glancing angle to the surface of the target. The intensity of the radiation depends on the distance from the surface of the target, with this dependence being determined by the relationship between the velocity of the particles and their lifetimes in the excited state.[90,92,93] Analysis of the spectra of excited molecules enables one to determine the contributions of rotational and vibrational excitations to the excitation energy of the molecules.[92,93] The defects of this method of detecting neutrals include the difficulties of determining the absolute values of the desorption

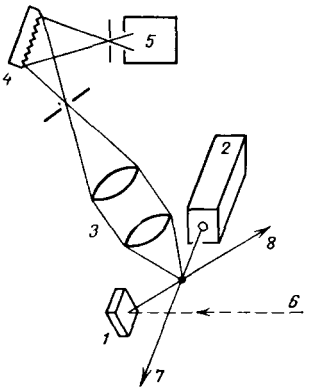

FIG. 2. Diagram of the detection of fluorescence caused by laser irradiation in the measurement of the yield of sodium neutrals in the ground state.[94] *1*—specimen, *2*—laser, *3*—lenses of the optical system, *4*—diffraction monochromator, *5*—photomultiplier, *6*—beam of electrons (or photons), *7*—laser beam, *8*—flux of desorbed sodium neutrals.

cross sections of the excited particles, as well as the limitation of the range of excitation energies and lifetimes of the excited particles in which they can be detected.

If the neutrals are desorbed in the ground state, then they can be excited with a laser and then detected by the fluorescence of the excited particles, analogously to the way in which this is done in desorption of excited neutrals.[87–91,94] Since there are considerably fewer excited neutrals in DSEE than neutrals in the ground state,[89–91] we can neglect the contribution to the fluorescence intensity from desorbed excited neutrals. If the laser radiation is directed parallel to the plane of the target, then fluorescence will occur at the emission frequency of the laser (Fig. 2), and thus one can determine the relative yield of neutrals as a function of the state of the target and the parameters of the radiation acting on it.

If one directs the laser radiation along the beam of desorbed neutrals (Fig. 3), e.g., from the back side of a transparent target, then the Doppler effect will influence the fluorescence radiation of photons. This allows one to study the velocity distribution of the desorbed neutrals.[94] To record the fluorescence one usually employs photomultipliers, while to increase the signal-to-noise ratio one modulates the radiation exciting the target and synchronously detects the signal at the output of the photomultiplier.[88–90,94]

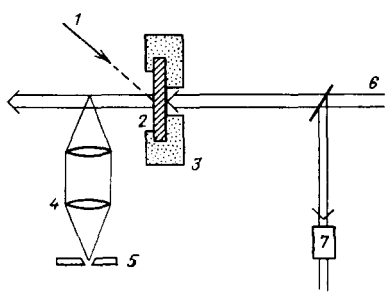

FIG. 3. Diagram of the detection of fluorescence caused by laser irradiation in measuring the velocities of sodium neutrals.[89] *1*—beam of electrons (or photons), *2*—specimen, *3*—specimen holder, *4*—focusing optics, *5*—entrance slit of monochromator, *6*—laser beam, *7*—etalon cell for tuning the laser frequency.

3. Fundamental experimental laws of DSEE. DSEE has been observed from surfaces with different types of binding between the particles: van der Waals,[6,34,72,95–97] covalent,[15,16,98–101] and ionic.[15,40,70,90,101–103] DSEE has not been observed in the case of metallic bonding.[64] The following positive atomic and molecular ions have been detected: O^+,[14,23] H^+,[14,23] F^+,[41,103–105] Cl^+,[57,103,106] Cs^+,[40] Na^+,[40,106,107] Li^+,[21,108] Ba^+,[109] N^+,[95,99], C^+,[95,110] CO_2^+,[111] CO^+,[14,23] OH^+,[43,112,113] O^{++},[109], F^{++},[103] and the negative atomic ions O^-,[45–48,114] H^-,[45,46,174] and neutral particles of CO,[62,65–67,79] N_2O,[62,65] N_2,[62,65] NO,[62,77–79] Cs,[40,64] Na,[40,89,90,94] Li,[21,87,90] Xe,[115] Kr,[72] and also the excited particles CO^*,[79,81–84] H^*,[73,88] OH^*,[91–93] Li^*,[85,90,116] and Na^*.[85,90,116]

The quantitative characteristics of DSEE, and sometimes also the qualitative dependences, depend substantially on the type of bonding of the particles to the surface and on the individual features of the desorbed particles. However, nevertheless, we can distinguish certain general laws of DSEE:

1. The magnitudes of the fluxes of desorbed particles are proportional to the flux of exciting radiation.[39,116]

2. The cross sections for DSEE are small in comparison with the ionization cross sections of the corresponding particles in the gas phase,[14,23] and they increase with decreasing binding energy of the particles with the surface. The DSEE cross section of neutrals lies in the range from 10^{-16} cm^2 [23,14] to 10^{-22} cm^2, [64,117] while that for ions lies from 10^{-10} cm^2 [14] to 10^{-25} cm^2.[40]

3. The yield of ions in DSEE usually does not exceed one percent of the yield of neutrals.[14,15,23,40,66,88,101]

4. The yield of excited neutrals is smaller by a factor of 10^2–10^3 than the yield of neutrals in the ground state.

5. The dependence of the DSEE yield on the energy of the exciting radiation has distinct thresholds in the energy region from 5 eV[68] to 32 eV.[86]

In certain cases characteristic features appear in these relationships that correspond to the excitation energy of core levels of the atoms, which are usually manifested better in photon than in electron stimulation of desorption (Fig. 4).[112,118] The desorption of doubly charged ions occurs at energies exceeding the ionization energy of the core levels.[103]

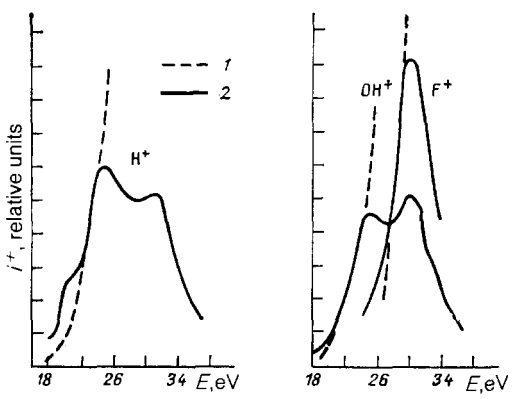

FIG. 4. Dependence of the yield of electron-stimulated (*1*) and photostimulated (*2*) desorption of ions of hydrogen, hydroxyl, and fluorine from the surface of TiO_2 on the energy of the electrons and photons in the threshold region.[43]

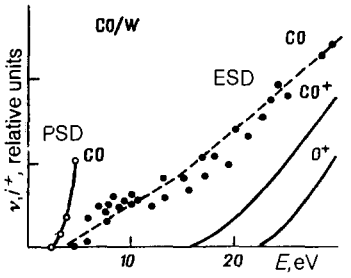

FIG. 5. Dependence of the DSEE yield of neutrals and ions from the CO/W adsorption system on the energy of the exciting particles in the threshold region.[99]

6. For systems with a covalent type of bonding, the thresholds for appearance of neutrals usually lie in the energy region of excitation of the valence electrons and below the value of the thresholds for appearance of ions (Fig. 5).[99] The energy dependences of the ion yield can manifest features corresponding to ionization of core levels[119,120] (Fig. 6) and multielectron excitations[16] (Fig. 7).

7. For systems with an ionic type of bonding, the features on the energy dependences of DSEE of ions and neutrals of the same chemical nature (Fig. 8)[21,40,41,86,94,106–108] usually coincide and correspond to the ionization energies of core levels.

8. The desorption cross-sections of neutrals within the limits of a monolayer do not depend on the concentration of the adsorbed particles,[40,64,72] while the desorption cross sections of ions with coverings greater than half a monolayer gradually increase with increasing coverage (Fig. 9).[21,40]

9. Ions have a broad energy distribution reaching several eV,[15,47,73,106] while the energy of neutrals in the ground state does not exceed 1 eV.[66,77,88,121] The excitation energies of neutrals are close in magnitude to the energies of ions.[66,73,84,90]

10. With increasing surface temperature, the ion yield in systems with ionic bonding either does not depend on the temperature, or declines,[122] while in systems with covalent bonding it increases (Fig. 10).[29,47] The yield of neutrals in the ground state increases,[34,89] while the yield of excited neutrals declines with increasing temperature of the substrate.[88,89]

11. For ions one can observe a sharp anisotropy of the angular distributions that reflects the symmetry of the arrangement of the adatoms with respect to the atoms of the substrate,[24,123,124] and the directionality of the adsorptive intramolecular bonds of the particles to the surface.[18,19,24] Here the range of escape of the ions in a certain cone of emission is considerably smaller than for neutrals in the ground state. In turn the latter is considerably narrower than for thermally desorbed particles.[16,66] The angular distributions of excited neutrals resemble those of ions.[16,83]

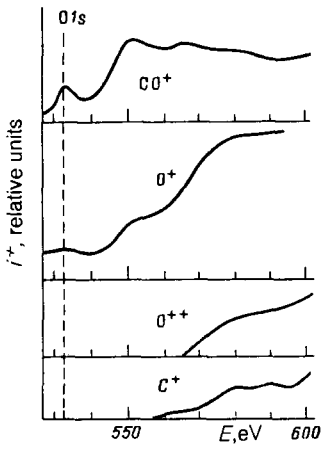

FIG. 7. Ion yield in the photostimulated desorption from an adlayer of CO on Ru (001) as a function of the photon energy near the 1s level of oxygen.[16]

12. For positive[21,47,125,126] and negative[47] ions a considerable isotope effect exists, consisting in an increase in the desorption cross-section of the light isotope as compared with the heavy one. There is no isotope effect for neutrals.[21,127]

13. The thresholds for appearance of ions and their angular and energy distributions coincide for desorption stimulated by electrons and photons.[43,57,106]

4. The mechanism of DSEE. The direct transfer of kinetic energy to an adsorbed particle by an electron, and *a fortiori* by a photon, in an elastic collision at not too great energies cannot lead to desorption of the former owing to the great difference of masses of the colliding particles. The desorption of particles upon irradiating a surface with elec-

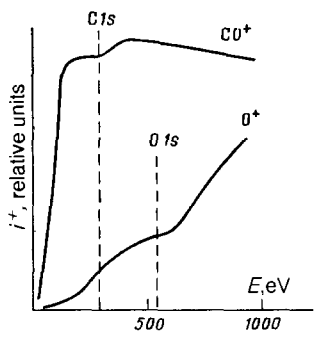

FIG. 6. Dependence on the electron energy of the currents of CO^+ and O^+ ions in DSEE from an adlayer of carbon monoxide.[119]

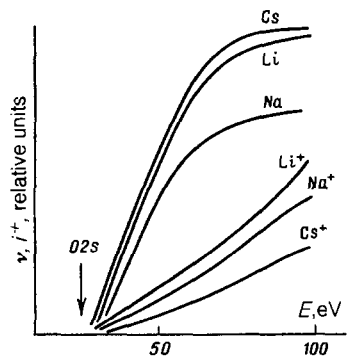

FIG. 8. Dependences of the ion currents and atom fluxes of lithium, sodium, and cesium in DSEE from oxidized tungsten on the electron energy.[21,40]

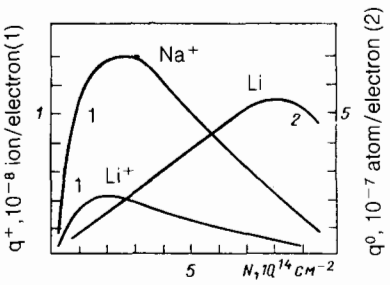

FIG. 9. Dependences of the yield of lithium and sodium ions (*1*) and of lithium atoms (*2*) in DSEE from oxidized tungsten on the surface concentration of the alkali metal.[21]

trons and with photons has many common rules[43,57,106] and results from excitation of the electrons that give rise to the adsorptive bonding. We can arbitrarily divide the desorption process into the following stages: initial electronic excitation, redistribution of electron density between the adsorbed particle and the surface, and displacement of the adsorbed particle owing to the evolution of the nonequilibrium state of the system, which can lead to desorption or return of the particle to the surface.

In this approach to describing desorption, various mechanisms remain outside the bounds of discussion, based on statistical models of the redistribution of the vibrational degrees of freedom among the particles forming the adsorption complex.

The initial electronic excitation can result either from direct excitation of the valence electrons in the Franck-Condon region,[26–28] or from ionization of the core levels with subsequent Auger decay.[128,129]

4.1. Single-electron excitations. The first consistent model of DSEE was based on a one-dimensional quasiclassical treatment analogous to the description of the process of dissociative ionization of molecules in the gas phase.[26,28] However, for molecules in the gas phase an electronic excitation can have a long lifetime sufficient for dissociation, while at the surface of a solid electronic excitations are absorbed by the solid. Therefore the desorption cross section has the form

$$Q = Q_e P, \tag{4.1}$$

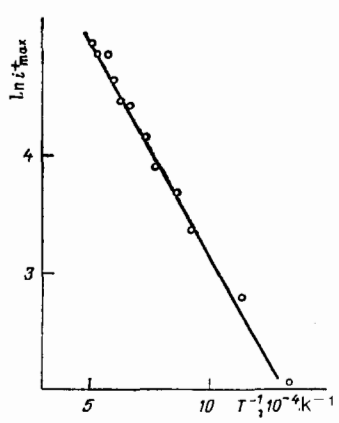

FIG. 10. Dependence on the reciprocal temperature[29] of the magnitudes of the maxima of the initial regions of the kinetic curves of the O^+ ion current in DSEE from an adlayer of oxygen on tungsten.

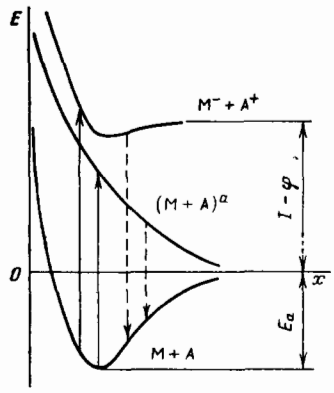

FIG. 11. Diagram of the potential energy of a metal–adsorbate system: (M + A)—bound state; $(M + A)^a$—antibonding state; and $(M^- + A^+)$—ionic state. The arrows indicate some of the possible transitions.

Here Q_e is the cross section for primary electronic excitation with account taken of the redistribution of electron density between the particle and the surface, and P is the probability of escape of the particle from the surface. The primary irradiation of the surface can cause a transition of the adsorbed particle-surface system from the ground state (M + A) to the ionic state $(M^- + A^+)$, or to the antibonding state $(M + A)^a$ in the Franck-Condon region (Fig. 11). The cross section of this process is comparable with those for analogous processes in the gas phase. The transition of the particles to the steep repulsive branches of the potential curves owing to electronic excitation leads to removal of the particles from the surface. In order that the particle might leave the surface as an ion, the minimal energy E of electronic excitation must be

$$E_i \geqslant E_a + I. \tag{4.2}$$

Here E_a is the energy of bonding of the particle with the surface and I is the ionization potential. If an electron of the adsorbed particle undergoes a transition to the Fermi level and its energy is transferred into the excitation energy of the system, then E_i is diminished by this amount.

In the process of leaving the surface the ions can capture electrons owing to resonance tunneling from the conduction band of the metal and Auger neutralization. The probability of desorption of an ion can be written in the form:

$$P^+ = \exp\left(-\int_{x_0}^{\infty} \frac{dx}{v(x)\,\tau(x)}\right), \tag{4.3}$$

Here x_0 is the equilibrium distance of the adparticle from the surface; $v(x)$ is the velocity of the ion at the point x, and $\tau \times (x) = \tau_0 \exp(-ax)$ is the lifetime of the ion at the distance x from the surface. If the kinetic energy of the ion at the instant of neutralization is greater than the energy of attraction of a particle in the ground state, i.e., the ion has passed through a certain critical distance x_k from the surface, then desorption of neutral particles will occur with the probability

$$P = \exp\left(-\int_{x_0}^{x_k} \frac{dx}{v(x)\,\tau(x)}\right). \tag{4.4}$$

Comparison of (4.3) and (4.4) implies that $P^+ < P$. Hence, for identical excitation cross sections Q_e, the cross section Q^+ for desorption of ions must be less than that of neutrals Q. Since $P, P^+ < 1$, then Q^+ and Q must be smaller than the cross sections of ionization of molecules by electrons and photons in the gas phase $Q_g \approx 10^{-16}\,\mathrm{cm}^2$. Actually the quantities Q and Q^+ lie in the range 10^{-17}–$10^{-24}\,\mathrm{cm}^2$, and the ion yield in DSEE is smaller than the yield of neutrals.[14,25,130] The very small cross sections of DSEE for metal-film systems are explained by the complete collectivization of the electrons in such systems, and correspondingly, by the small lifetimes of excited states.

The expressions (4.3) and (4.4) give rise to a strong dependence of the cross sections Q^+ and Q on the equilibrium distance x_0 of adsorbed particles from the surface, which determines the efficiency of electron exchange and the rate of escape of the ion from the surface. For Q^+ such a dependence is qualitatively implied by the experimental data.[3,26] However, for Q no substantial dependence on x_0 has been found.[21,130] Since x_0 can appreciably increase with increasing temperature upon excitation of vibrational transitions in the adsorbate-substrate system owing to the anharmonicity of the interaction potential and to changes in the density of the distribution of particles in the potential well, the cross sections Q^+ and Q should increase with increasing temperature of the substrate.[51] Such an effect has been observed for a number of adsorption systems for the desorption of ions.[51,131]

The model predicts broad energy distributions of the escaping ions and neutrals (of the order of several eV) owing to transitions of the adsorbed particles to the steep repulsive branches of the ion potential curves[53]:

$$\frac{\mathrm{d}i}{\mathrm{d}E} = i_e Q_B P^+ |\psi(x(E))|^2 \frac{\mathrm{d}x}{\mathrm{d}E}. \tag{4.5}$$

Here i is the ion current, i_e is the electron current, E is the kinetic energy of the ions, and $\psi(x(E))$ is the vibrational wave function of the adatom. Broad energy distributions for ions with a maximum have been observed experimentally.[26,28,29,53] However, these studies did not take into account the inhomogeneity of the electrodes of the energy analyzers with respect to work function, which can substantially distort the form of the distributions, especially in the low-energy region. For neutrals the energies proved to be considerably smaller and the extent of the distributions did not exceed several tens of eV.[65,121] This is difficult to explain if the main process of formation of neutrals is the neutralization of ions. Since $v(x) \sim m^{1/2}$, where m is the mass of the desorbed particles, Eqs. (4.3) and (4.4) imply the existence of a considerable isotope effect for DSEE, yet smaller for neutrals than for ions. An isotope effect has been found for the ions of the noble gases,[34,72] hydrogen,[125] oxygen,[127] and lithium.[126] However, for atoms of the isotopes of oxygen[127] and for atoms of the alkali metals[21] no dependence of the cross sections on the mass of the particles was found.

To describe the angular dependences of DSEE within the framework of the given model, it is assumed that the initial direction of escape of the particles coincides with the direction of the ground state of the chemical bond of the adparticle with the surface or with that of an intramolecular bond in the adsorbed molecule,[132] while the width of their cone of emission is determined by the vibrational wave function of the particle at the surface.[133] In the desorption of ions from the surface of a metal, their trajectory of motion can be influenced by the image potential,[134,135] and the form of the angular distributions—also by the neutralization of the ions by electrons of the metal[136] and the microrelief of the surface.

In the simplest case of a plane surface and without taking account of the real repulsive term, it has been shown that the image potential increases the polar angle Θ of desorption of an ion, and does not alter the magnitude of the azimuthal angle[134]:

$$\cos\Theta = \cos\Theta_0 \cdot \left\{ \frac{1 + [V_i/(E - V_i)\cos^2\Theta_0]}{1 + [V_i/(E - V_i)]} \right\}^{1/2}, \tag{4.6}$$

Here Θ_0 is the initial angle of desorption, V_i is the image potential at the equilibrium distance (x_0) of the ion from the surface, and E is the kinetic energy of the desorbed ion. This implies that a critical polar angle Θ_k exists of the initial inclination of the bond of the particle with the surface:

$$\Theta_K = \arccos \frac{V_i}{E - V_i}. \tag{4.7}$$

Exceeding this angle makes the escape of ions from the surface impossible.[134,137] The rate of neutralization declines exponentially with increasing distance of the ion from the surface of the metal. Correspondingly, the role of the neutralization process is greater for ions escaping with larger polar angles. Therefore the recorded angular distributions of ions are shifted toward smaller polar angles.[138] Consequently the image potential and the neutralization of ions at the surface of the metal influence in opposite directions the magnitude of the polar angle of the angular distribution of ions so as to compensate each other's action (Fig. 12).[136]

The influence of the image potential on the angular distribution of DSEE has been qualitatively confirmed by the observed increase in the kinetic energy of H^+ ions from the (110) face of Pt (from a condensed layer of water) from the center of the cone of emission to its border,[73] and also by the change in the yield of ions from adsorbed layers of molecules upon introducing electropositive impurities into the layer, which altered the angle of inclination of the molecules to the surface of the metal.[139] Also the broader angular distributions of neutrals as compared with ions are evidence favoring this effect.[66]

An influence of the neutralization of escaping ions on the form of the angular dependences of the ions and excited neutrals has been found experimentally in the existence of an

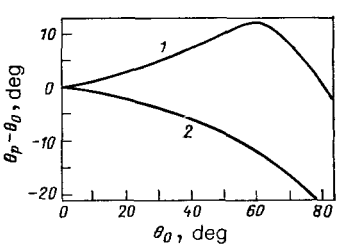

FIG. 12. Effect of the potential of the image forces (*1*) and of processes of neutralization of ions at the surface (*2*) on the angular distribution of DSEE ions as functions of the initial angle of desorption.[136] θ_p—measured angle of desorption.

azimuthal asymmetry of the cone of emission of CO^+ and CO^* in desorption from the (110) face of Ni.[83,140] The extended character of the contour of the emission spot along the densely packed rows of atoms is explained by the dependence of the rate of neutralization on the atomic relief of the surface.[141]

Thus the model qualitatively explains the fundamental experimental data for ions, although quantitative estimates are made difficult by the complexity of the quantitative description of the $\tau = \tau(x)$ relationship. However, not even qualitative agreement with experiment exists for neutrals. We can improve the agreement in the latter case if we assume that the main pathway of formation of neutrals is the excitation of the adsorption system into an antibonding state. Besides, a quantum-mechanical description of DSEE processes within the framework of the given model in the adiabatic Born-Oppenheimer approximation[142] with account taken of the nonadiabatic corrections[143] leads precisely to this conclusion. Application of scattering theory to DSEE for particles of large masses yields an expression for the desorption cross sections of ions analogous to those obtained in the semiclassical treatment.[26,28] The fundamental difference in the conclusions between the semiclassical and the quantum-mechanical treatments is reduced to the small probability of tunneling of electrons from the metal to the escaping ion, although taking account of the nonadiabatic corrections leads to a probability of desorption of neutralized ions different from zero.[143]

Calculations performed by using the quantum formalism for the desorption of hydrogen and oxygen from tungsten showed that taking account of quantum effects in the escape of particles from the surface can lead to a decrease in the probability of escape of particles by several orders of magnitude as compared with the semiclassical treatment.[144]

A more complete quantum-mechanical treatment that takes account of the nonresonance and resonance energy transfer from the excited adparticle to the metal leads to the conclusion that situations can happen in which the neutralization of ions can also lead to the desorption of neutrals, and not only to their capture into the ground state.[145]

However, the described model of DSEE does not take into account two important circumstances: the very small lifetimes of single-electron excitations ($\sim 10^{-16}$ s) at the surface of metals as compared with the times needed for escape of particles from the surface ($\sim 10^{-14}$ s), and the considerably smaller dimensions of the radii of the positive ions as compared with those of the corresponding atoms. In this regard the hypothesis has been advanced that the desorption of neutrals involves the excitation of the adsorbed particles into the ionic state, while the desorption of ions involves excitation of the adsorbed particles into the excited ionic state.[146]

In both cases the ions formed upon ionization of adsorbed particles move toward the surface of the metal under the action of the mirror-image forces (Fig. 13). As a result of neutralization the ions can undergo transition to the repulsive branch of the potential curve of the ground state. If their energy at the instant of neutralization is greater than the binding energy to the surface, i.e., the ion has passed through a certain critical distance toward the surface necessary to attain sufficient kinetic energy, then desorption of neutral particles should be observed. In the opposite case the particles again return to the ground state. Desorption of ions requires two successive tenneling transitions of electrons. The first converts the excited ion to a repulsive term of the ground state, and the second—to the ground state of the ion. If the energy of the neutralized atom is greater than the ionization potential of the atom, then desorption can occur after a repeated ionization. If this energy is less than the ionization potential, then the excited ionic state can lead to desorption of only neutral particles. Since the magnitude of the displacement of the excited particles depends on their velocity and correspondingly on their mass, the model predicts the existence of an isotope effect for DSEE. This effect should be smaller for neutrals than for ions, yet larger for ions than in the previous model, owing to the need for two successive tunneling transitions of electrons for their desorption.

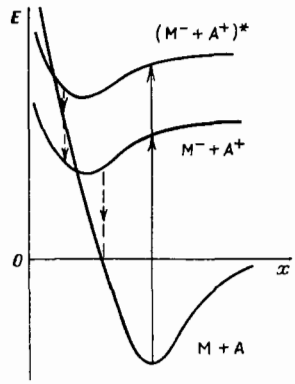

FIG. 13. Diagram of the potential energy of a metal-adsorbate system with account taken of the change in the radius of the ions as compared with the atoms.[146] (M + A)—ground state, $(M^- + A^+)$—ionized state, $(M^- + A^+)^*$—excited ionized state.

Depending on the scheme of desorption (motion of the desorbed ion away from the surface or displacement toward the surface with subsequent escape[146]), the magnitude of the isotope effect differs. Under the condition of repeated charge transfer it has the form[147]

$$\sigma = \frac{P^+(m_2)}{P^+(m_1)} = 1 - \delta\left(\frac{3}{2}Fm_1^{1/2} - 1\right), \tag{4.8}$$

in contrast to $\sigma = 1 - (\delta/2)Fm_1^{1/2}$, as is implied by Refs. 26 and 28. Here we have $\delta = (m_2 - m_1)/m_1$, while $F = F(\tau(x), v(x))$ is a function that depends on the rate of tunneling of an electron between the escaping particle and the substrate and on the concrete form of the terms of the ground and excited states of the system, which determine the velocity of displacement of the particle. The magnitude of the isotope effect substantially depends on the parameters of the process limiting desorption and on the course of the potential curves in the region active with respect to charge transfer. Therefore, for systems in which the charge-transfer process is the fundamental process limiting desorption, measurement of the magnitude of the isotope effect can facilitate refining the scheme of desorption and the parameters of neutralization. There is as yet no quantum-mechanical version of such a scheme of desorption. The presented semiclassical scheme does not take account of the broadening of the electronic levels of the adatoms near the surface of the metal,[16] which can lead to crossing of levels of excited states and also possible energy losses by ions upon reflection from the surface.

The discussed approach to describing DSEE includes as

the primary process one-electron excitation of the adsorptive bond, which alters the valence electrons of the adatom in the ground state. However, the lifetimes of such excitations are short owing to the strong electronic exchange of the particle with the surface of the metal. Apparently, actually such a mechanism of DSEE is possible for particles only in weakly bound or physically adsorbed states. Actually the possibility of such a mechanism has been confirmed in studying the desorption of Xe^{115} and Kr^{72} from the (110) face of W. The threshold for appearance of desorption of these atoms corresponded to their ionization energy, while the desorption of ions was not observed, while a strong isotope effect was observed for Kr. However, a final conclusion on the correctness of this model requires quantitative comparison of its conclusions with experimental data.

4.2. Multielectron excitations. More universal models must include complicated multielectron excitations that enable transfer of greater energy and a substantially more prolonged lifetime of the adsorbed particles in the excited state, which makes possible a higher efficiency of DSEE. Such models allow one to explain the simultaneous transfer of several electrons between the interacting particles in the presence of a considerable fraction of an ionic component of the bond, and also larger thresholds for appearance of DSEE, which in a number of cases correspond to the excitation energy of core levels of the atoms.

The first version of such a model was proposed for compounds with maximum valency[128,129]: the primary electron or photon creates a vacancy in the core electronic levels of cations and anions, which decay owing to inter- or intraatomic Auger transitions. If the Auger process changes the sign of the charge of an anion, the latter goes over onto the repulsive branch of the Madelung potential curve and acquires the ability to be desorbed as the result of a Coulomb explosion. Figure 14 shows a diagram of interatomic Auger decay in TiO_2. Since the valence electrons mainly lie on the oxide ions, a hole in the Ti ($3p$) level can be filled only by interatomic Auger decay accompanied by the removal of at least two electrons from the oxide ion, which imparts a positive charge to it. Desorption owing to interatomic Auger decay of vacancies in the cores of cations can occur only if all the valence electrons of the cations have been transferred to the anions, i.e., for compounds with the maximum valency. In the converse case the core vacancies of the cations will decay with greater efficiency by intraatomic Auger processes. In treating desorption one must take account of the crystal structure of the surface. Actually, cations can be desorbed only in the case in which the change in sign of the charge of

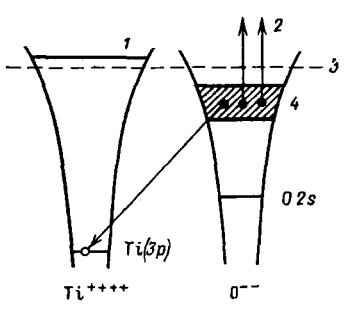

FIG. 14. Diagram of interatomic Auger decay in TiO_2.[128] *1*—conduction band, *2*—Auger electrons, *3*—Fermi level, *4*—valence band.

an individual anion leads to a repulsive force greater than the binding force of the cation with other unexcited anions.

The removal of electrons from anions requires a certain energy. In the Auger decay of a vacancy in a core level this is made possible by the transition of a valence electron to the core level. The maximum magnitude of the energy released here is determined by the energy difference between the top of the valence band and the vacant level (see Fig. 14). This energy value determines the threshold for appearance of desorption within the framework of the given mechanism.

Ionization of an anion can be treated in two stages: creation of a neutral, which is weakly bound to the substrate, and subsequent ionization of this neutral. If, after filling the core hole, the anion is converted into a neutral, then the entire energy E_m goes into ionizing the neutral:

$$E_m \geqslant I - \varphi + E, \tag{4.9}$$

Here I is the ionization potential of the neutral; φ is the work function of the substrate (if the energy of the primary electron is transferred to the neutral upon transition to the Fermi level) and E is the kinetic energy of the ion. If creation of a neutral requires removal of two electrons from the anion, the energy E_m will be spent according to the relationship

$$E_m \geqslant F_g + U + (I - \varphi + E), \tag{4.10}$$

Here E_g is the width of the forbidden band and U is the energy of repulsion of the hole. Analysis of the experimental values of the threshold energies for appearance of DSEE for systems with an ionic type of bonding shows good agreement with the predictions of this model.[40,57,86,112,128]

In the case of a covalent-type bond, in which the bonding is effected by shared electrons, there is no need to bring about a considerable charge transfer between the interacting particles by electronic excitation so as to lead to Coulomb repulsion. To do this it suffices merely to remove the shared electrons. However, it has turned out that, in the case of a covalent-type bonding, a mechanism involving excitation of core levels is more effective than direct excitation of the valence electrons. This results from the fact that the lifetime τ of a two-hole state is two orders of magnitude longer than for one-hole excited states,[148] both because of the considerable decrease in the dimensions of an atom upon two-hole excitation and because of the electrostatic repulsion of the holes within the bounds of the restricted allowed energy band.[149] The criterion for localization of a two-hole state that enables effective desorption in the presence of two-hole correlation is that the interhole repulsion U should exceed the magnitude of some effective covalent interaction γ.[98,150,151]

Within the framework of this mechanism, the desorption cross section is written in the following form[150]

$$Q^+ = \sum_i Q_i f_D P(t_k), \tag{4.11}$$

Here Q_i is the ionization cross section of the ith core level, f_D is the fraction of the core ionization events that lead via the Auger process to formation of two holes localized in bound orbitals; $P(t_k)$ is the probability that both holes created in bound orbitals at the instant of time $t = 0$ will survive to the time t_k required for the particle to move away from the surface to a distance x_k that excludes the possible capture of the particle by the surface. For localized holes the form of the

expression for $P(t_k)$ depends of the time and on the parameter γ^2/zU, where z is the coordination number of the lattice. If $\gamma^2 t/zU < \hbar$, then we have

$$P \sim \exp\left(-\frac{\gamma^2 \alpha t}{zU\hbar}\right), \tag{4.12}$$

while if $\gamma^2 t/zU \gg \hbar$, then we have

$$P \sim \beta^{1/2}\left(\frac{zU\hbar}{\gamma^2 t}\right)^3, \tag{4.13}$$

Here $\beta = (4\alpha)^4[\pi^2(1-\alpha)^8]$, while the value of α is close to 1/2.

In principle, two-hole localization can result not only from Auger decay of a core vacancy, but also from Auger transitions of the type VVV.[152] However, such transitions must be effected at low enough energies of the ionizing radiation and must lead to low thresholds for appearance of DSEE, which has not been observed experimentally. On the other hand, even in the case of adsorption systems with a covalent type of bonding, excitation channels have been realized in a number of cases via formation of core vacancies.[67,119] However, until recently the model based on excitation of core vacancies remained incomplete, since it mainly explained the existence of high values of the energy thresholds for appearance of DSEE, but faced a number of difficulties in explaining the magnitudes of the desorption cross sections, the energy distribution of the particles, and the isotope effect. Actually, in the previous model the escape of the ions from the surface was limited by electron exchange between the escaping particle and the surface; however, for systems with an appreciable fraction of an ionic component of bonding, neutralization processes cannot play a substantial role owing to the lack in such systems of a sufficient number of free electrons.

This method has been developed further through taking account of the relaxation of the local field of the surface.[40] The fundamental idea of this approach consists in redistribution of electron density between the adsorbed particle and the surface as a result of the primary electronic excitation in such a way that the adsorbed particle becomes either an ion or a neutral. If a repulsion arises between the ion and the surface with the energy $U_1(x') > 0$, the ion begins to escape from the surface (Fig. 15). In the process of escape of the ion from the surface, relaxation occurs in the spatial distribution

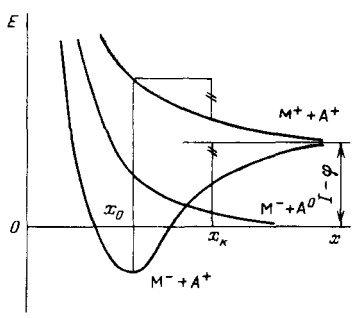

FIG. 15. Diagram of the potential energy of an adsorbed particle—surface system with account taken of relaxation of the local field of the surface.[21,40] $(M^- + A^+)$—ground state, $(M^- + A^0)$—excited neutral state, $(M^+ + A^+)$—excited ionized state.

of electron density in the substrate. Thus an attraction arises between the ion and the surface with the energy $U_2(x') < 0$, actually determined by the image potential.[117] If x is the distance of the ion from the surface at which the surface field relaxes, then the kinetic energy $E(x')$ of the ion for $x' < x$ is

$$E(x') = U_1(x_0) - U_1(x'), \tag{4.14}$$

Correspondingly the velocity of the ion is

$$v(x') = \left(\frac{2}{m}\right)^{1/2}(U_1(x_0) - U_1(x'))^{1/2}, \tag{4.15}$$

Here x_0 is the initial distance of the adparticle from the surface.

If the field relaxes when the ion lies at the distance x from the surface, the kinetic energy of the ion as $x' \to \infty$ is:

$$E(x, \infty) = U_1(x_0) - U_1(x) - U_2(x). \tag{4.16}$$

The condition for desorption of the ion is the inequality

$$U_1(x_0) \geqslant U_1(x_K) + U_2(x_K). \tag{4.17}$$

The relationship (4.17) enables one to find x_k, the critical distance of the ion from the surface. Ions that lie at a distance $x < x_k$ at the instant of field relaxation return to the surface, while ions for which $x \geqslant x_k$ leave the surface. The probability of escape of an ion from the surface can be written in the form:

$$P^+ = \exp\left(-\tau^{-1}\int_{x_0}^{x_K}\frac{dx'}{v(x')}\right). \tag{4.18}$$

The fundamental difference of Eq. (4.18) from (4.3), which was derived using the model of neutralization of desorbed ions, consists in the finite integration limit and the independence of τ on x', which in the given model determines the lifetime of the surface in the excited state. The independence of τ on x' substantially simplifies the problem, since to calculate P^+ it suffices to know only the dependences of U_1 and U_2 on x'.

The current i of desorbed ions that reach the point x without relaxation of the local field of the surface is determined by the relationship

$$i^+ = i_0 P^+ \exp\left(-\tau^{-1}\int_{x_K}^{x}\frac{dx'}{v(x')}\right). \tag{4.19}$$

Here i_0 is the ion current at the initial instant of time. Since the kinetic energy $E(x, \infty)$ of the ions as $x' \to \infty$ is unambiguously associated with x by using (4.16), Eq. (4.19) enables one to obtain the dependence of the ion current on the energy.

In contrast to the model in which the desorption of ions was limited by neutralization, the energy distribution of the ions in the given case is determined not so much by the probability of localization of a particle near the equilibrium position, i.e., by the vibrational wave function of the adatom,[53] as by the statistical process of relaxation of the local field of the surface. The introduction of the vibrational wave function to describe the adatom does not introduce in this case substantial changes in the form of the dependence of the current of desorbed ions on the energy, owing to a compensation effect: excitation of a particle closer to the surface leads to a greater

repulsion of it, and correspondingly it will pass through a greater path length in the same time. A bell-shaped form of the energy distribution of the ions in the model of relaxation of the local field of the surface is possible only if long-lived excited states ($\tau \approx 10^{-10}$–10^{-12} s) exist at the surface or if the desorbed particle is weakly attracted to the surface after relaxation, $U_2(x') \to 0$. However, such a situation is incompatible with the existence of an isotope effect or with a sharp dependence of the desorption cross section on the mass of the ion.[21] Therefore the form of the energy distribution is a good criterion for the applicability of any given desorption model.

If the interaction of the ion with the surface can be described within the framework of electrostatics, which is admissible for systems with a considerable fraction of ionic component of bonding, owing to its localization, the analysis of DSEE is simplified. The Coulomb character of the repulsion of desorbed ions is confirmed by the twofold increase in the mean kinetic energy of doubly charged ions as compared with singly charged ones.[103]

On the basis of the desorption model taking account of the relaxation of the local field of the surface, it has been possible for tungsten-oxygen-alkali metal systems to calculate the ratio of the desorption cross sections of the alkali-metal ions and their energy distributions, which proved to agree well with experiment, and also to determine the lifetime τ of oxygen adatoms in the excited state.[21]

Desorption of neutrals in this model involves the neutralization of the adparticle owing to electronic excitation and subsequent exchange repulsion of the electron shells of the adatom and the atoms of the surface. However, since at the initial instant of time after electronic excitation the adatom lies in the strong electric field of the surface, then owing to its polarizability it can be attracted to the surface, which favors its reionization. Therefore, for the adatom to escape from the surface, the relaxation of the electron density of the substrate must occur faster than the adatom can reionize. Relaxation hinders the reionization of the adatom and increases the exchange repulsion of the adatom from the surface. Since the desorption cross sections of neutrals do not depend on the mass,[21,40,127] while their energy distributions lie in the region of considerably smaller energies than for ions,[65,121] the reionization of adatoms can be substantial only at the surface, but not in the process of their escape. By using this model it has been possible to estimate the probabilities of Auger neutralization of Cs^+ ions, reionization of Sc atoms at positive oxygen ions, and energy distribution of Cs atoms in the W–O–Cs system.[121]

The angular dependences of DSEE in this model are explained as in the former model by the repulsion of particles after electronic excitation in the direction of their initial bond. Here, in the case of desorption of ions, the Coulomb character of their interaction enables one to take account of the influence on the form of the angular distributions of not only the image potential, but also of the lifetimes of the excited states.

Thus the model based on excitation of core vacancies and taking account of relaxation of the local field of the surface enables one to describe DSEE not only qualitatively, but quantitatively in adsorption systems in which one can neglect electron exchange between the escaping particles and the surface.

4.3. Dependence of the DSEE cross section on the concentration of adsorbate. It is fundamentally important for understanding the mechanism of DSEE to study the specifics of the excited state of the system that leads to desorption, in particular the influence of the localization of the chemosorptive bond and the delocalization of the excitation upon forming two-dimensional bands in the layer of adsorbate.

The existence of lateral interaction in a submonolayer of adsorbate leads in a number of cases to the appearance of a maximum on the concentration dependences of the current of desorbed ions in the range of 0.25–0.5 of a monolayer. This dependence has been observed for systems both with ionic (alkali metals on oxidized tungsten[21,40]) and covalent types of bonding (H, O, CO on metals[72,101,153,154]).

In the presence of phase transitions in the adsorbed layer[155] and of reconstruction of the substrate,[156,157] the concentration dependence is stepwise in character, and is well correlated with the change in the LEED patterns.[156]

To establish a distinct connection of the reduced efficiency of desorption with delocalization of excitation in the adlayer, one must eliminate the possible influence of reconstruction of the substrate with increasing coverage, and also simultaneously monitor the thresholds of appearance and angular and energy distributions of the desorbed ions.[158]

In contrast to ions, the concentration dependence of the yield of neutrals indicates a constancy of the desorption cross section within the limits of a monolayer (see Fig. 9) and a sharp decrease in their yield at degrees of coverage greater than 0.8–1.0.[21,64,72]

The variation of the desorption cross section of ions with increasing adsorbate concentration can be associated with several factors—variation in the charge state of an adsorbed particle and in the immediate environment owing to lateral interaction, existence of a phase transition of the two-dimensional condensation type, reconstruction of the substrate, and also the occurrence of chemical reactions at the surface.[159–161]

If a phase transition leads to formation of islands of adsorbate, the conditions of electron exchange between an island and the surface are sharply altered.

In the adsorption of an alkali metal, for example, the metallization of the islands can substantially decrease the desorption cross section of ions, either owing to decrease of the lifetime of excited states of the substrate under the islands,[21] or owing to a change in the charge state, and correspondingly, of the terms of the ground and excited states of the systems.[147,158] In the presence of two phases on the surface, the ion current will be proportional to the concentration N_1 of the alkali metal in the atomic phase. At a concentration of alkali metal $N < N_k$, where N_k is the critical concentration corresponding to creation of islands, we have $N_1 = N$. That is, only the atomic phase exists. When $N > N_k$, both phases coexist on the surface:

$$N = N_2 + N_K\left(1 - \frac{N_2}{N_0}\right), \tag{4.20}$$

Here N_2 is the concentration of metal in the islands; N_0 is the concentration of the metal in the monolayer. Upon substituting $N_2 = N - N_1$, we obtain the dependence of N_1 on N for $N > N_k$ (see Ref. 21):

$$N_1 = \frac{N_K(N_0 - N)}{N_0 - N_K}. \tag{4.21}$$

Hence the current of desorbed ions must increase linearly with increasing N up to N_k, and then it declines linearly upon further increase in covering. Since $N_k \sim \exp(-U_0/kT)$, where U is the binding energy of the metal atoms in an island, with increasing temperature we should expect a displacement of the maximum of the $i^+ = f(N)$ relationship toward the region of higher concentrations.

If island formation on the surface does not occur with increasing concentration, and the decrease in the cross section involves redistribution of the electron density in the region of the bond or change in the position, form, and population of the resonance level of the adatom, then the maximum of the $i^+ = f(N)$ relationship will be displaced with rising temperature into the region of lower concentrations owing to weakening of the chemosorptive bond.

In a number of cases conclusions have been drawn on the generality of the mechanism of DSEE for ions and excited neutrals on the basis of similarity of the dependences of the fluxes of excited neutrals and ion currents on the temperature of the substrate and the concentration,[82,162] as well as the similarity of the angular and energy dependences.[83] The yield of neutrals in the ground state increases,[34,89] while that of excited neutrals declines with increasing temperature of the substrate.[88,89] The ion yield in systems with ionic bonding either does not depend on the temperature or declines,[122] while it increases in systems with covalent bonding[29,47] with increasing temperature. This again indicates the possibility of a substantial difference in the mechanisms of desorption for systems with different types of bonding.

However, for most systems the temperature dependences of the isotope effect,[34] and of the desorption cross section of ions[163–166] and of neutrals in the ground[71,62,89,90,94] and excited states cannot yet serve as a reliable verification of the discussed models of desorption.

4.4. The role of secondary electrons in DSEE. In principle, secondary and backscattered electrons can exert a substantial influence on the process of DSEE. However, their contribution to the desorption cross-section is not fully known.

A number of studies have concluded that secondary electrons play a decisive role in DSEE. In particular, such a conclusion has been drawn in studying ESD of H^+ ions from the system NH_3–NI,[167] and PSD of H^+ ions from the system H_2–YbO–Sm.[168] However, for PSD substantial differences were detected in the yield of secondary electrons and of O^+ ions from the system O–Cr, and also of H^+ ions from the systems OH–Ti, OH–Cr, and OH–Cu,[169] depending on the energy of the irradiating photons, which indicates a primary role of the mechanism of direct photoexcitation.

As is known, the efficiency of the yield of secondary electrons depends nonmonotonically on the energy of the primary beam. Therefore the presence or absence of a structure in the dependence of the ion yield on the energy of the primary beam cannot be a sufficient criterion for distinguishing the contribution of primary particles and of secondary electrons to the DSEE cross section.

Qualitative estimates can be made to distinguish the contribution of secondary and backscattered electrons to the DSEE cross section.

If the mechanism of valence excitation makes possible a large desorption cross section, we can expect that systems with very low thresholds for appearance of desorption will have large desorption cross sections (per unit primary particle) owing to the large number of secondary electrons with low energies. Thus the yield of negative ions or neutrals, which have lower thresholds for appearance as compared with positive ions, perhaps is caused to greater degree by secondary effects.

The first attempt to describe quantitatively the contribution of secondary electrons to the desorption cross section was undertaken recently for the desorption of excited neutrals OH* from the system OH–TiO_2.[170,171]

The procedure of distinguishing the secondary-electron spectrum by processing the energy dependence of the yield of OH* enabled establishing the decisive influence of secondary electrons with energy less than 50 eV on the efficiency of desorption and showing that at higher energies this contribution becomes insignificant.

The described method is analogous to the procedure of picking out from the shape of Auger lines features involving energy losses of electrons, but it is very laborious. However, taking account of the contribution of secondary electrons to the desorption cross section bears important information on the mechanism of excitation of the system and reduces the ambiguity of interpretation of the experimental results.

5. Application of DSEE to study processes on the surface of a solid. The considerable progress attained in recent years in understanding the mechanism of DSEE enables one to use this phenomenon to obtain varied information on the surface of a solid and on the processes that occur there. An important advantage of DSEE as compared with other methods of surface diagnostics, in particular, electron spectroscopy, is that one can use it to analyze the very upper layer of atoms of a solid, whereas, as a rule, when using electron spectroscopy it is very difficult to distinguish the information from the upper layer and from the more deep-lying layers, since the depth of escape of the electrons being analyzed amounts to several atomic layers.

The analysis of the kinetics of variation of the concentration of adsorbed particles using DSEE is based on the proportionality of the ion current i^+ or the flux ν of desorbed neutrals to the concentration N of adsorbed particles:

$$i^+ = i_e Q^+ N, \qquad \nu = i_e Q N, \tag{5.1}$$

Here i_e is the flux of electrons or photons bombarding the surface. It is considerably easier to carry out the recording of ions than of neutral particles. Therefore, in the overwhelming majority of cases ion desorption has been used for surface analysis.

Fundamentally DSEE can be used to study the kinetics of desorption and adsorption if one can neglect the rate of DSEE as compared with the rates of these processes. As a rule, this condition is easily satisfied if one diminishes the flux of particles irradiating the surface and increases the temperature of the surface or the pressure of the gas being studied. Then by measuring the ion current in DSEE one can obtain information on the variation of concentration of adsorbed particles. It is desirable to perform these measurements at a constant temperature of the substrate, since the

magnitude of Q^+ depends on the temperature of the surface.[51] Moreover, with increasing concentration of chemosorbed particles Q^+ can substantially decline, usually at degrees of coverage greater than 0.3–0.5, owing to lateral interactions between the adsorbed particles. Such an effect has been observed for the systems Cs–O–W and Na–O–W,[40] Li–O–W,[21] O–W,[51,153] O–Mo,[172] O–Ni and O–Fe,[102] CO–W,[173] CO–Ni[174] CO–Ru,[175] and H–W.[61] The detailed mechanism of the influence of lateral interactions on the magnitude of the ion yield in DSEE is not yet clear. Perhaps it involves a decrease in the time τ of localization of excited states owing to formation of a two-dimensional energy band of the adsorbed layer,[158] or a change in the form of the terms of the ground and excited states of the system.[21] The latter factor seems more plausible, since the desorption cross section Q of neutrals does not depend on the concentration N of adsorbed particles,[40] and it is difficult to admit a substantial change in τ owing to the electrons of the adsorbed layer in the presence of a large number of free electrons in the metal. However, in any case we must bear in mind the possible dependence $Q^+ = f(N)$ in performing kinetic measurements of adsorption and desorption by using DSEE. Correspondingly the simplicity of such measurements is restricted to low concentrations N. The binding energies have been determined by this method for CCl_2F_2, CH_2F_2, and C_2F_6 with tungsten. It was shown that CCl_2F_2 and CH_2F_2 dissociate on the surface of tungsten, while C_2F_6 is adsorbed in molecular form.[105]

We should especially note the application of DSEE to study the kinetics of solution of adsorbates in substrates, since DSEE occurs directly at the surface. However, also in this case one should take account of a possible dependence of Q^+ on the concentration of adsorbed particles. To study the kinetics of solution of an adsorbate, one must create conditions such that the rate of solution considerably exceeds the rate of adsorption, thermodesorption, and DSEE. DSEE has been used to study the kinetics of solution of oxygen in tantalum[176] and niobium,[177] and of hydrogen in palladium.[178] It was shown for the systems O–Ta and O–Nb that the potential barrier for transfer of oxygen from the surface into the first juxtasuperficial layer is considerably smaller than for the transfer of oxygen from the juxtasuperficial layer into the next layer, while in the case of palladium—for hydrogen there is practically no potential barrier for penetration into the juxtasuperficial layer. Consequently such experiments enable one to study the potential structure of juxtasuperficial layers of an adsorbent.

The desorption cross section Q^+ is very sensitive to the state of the adsorbed particles and to their displacement in the direction perpendicular to the surface. Hence DSEE is successfully used to reveal various adsorbed states of a particle on a surface and transitions among them.[157,179] For example, the existence has been found of two states α_1 and α_2 within the limits of the α-state of CO on W that had been found by the method of thermodesorption spectrometry.[179] In desorption by electrons, the α_1-state is manifested in the appearance of a current of CO^+ ions, and the α_2 state in the appearance of a current of O^+ ions. Intense bombardment of the adsorbed layer with electrons or heating of the substrate leads to transition of the carbon monoxide from the α_1-state to the α_2-state (Fig. 16), and also to dissociation of the weakly bound molecules.[180] The complex nature of the α-

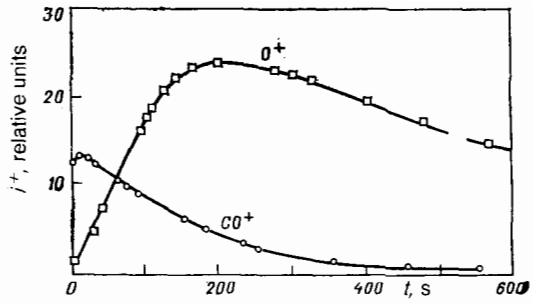

FIG. 16. Dependences of the ion currents of CO^+ and O^+ in DSEE from an adlayer of CO on tungsten at 100 K on the time of electron irradiation.[179]

state of CO on W is also indicated by various characteristics of the desorption of O^+, O^-, and CO^+ ions from this state.[181] An even more complex structure of an adsorbed layer was revealed for hydrogen on palladium on the basis of analyzing the time and temperature dependences of the yield of H^+ and H^- ions in DSEE. Four different states of hydrogen were found, although by the data of thermodesorption the layer was rather homogeneous.[182]

The extreme sensitivity of DSEE to changes in the state of the adsorbed particles is illustrated by two successively occupied adsorption states of oxygen with desorption cross sections of O^+ ions differing by a factor of $\sim 10^3$. They were found on Mo,[28] W,[51] Ta,[176] and Nb.[177] The first-filled state corresponds to formation of a chemisorbed layer of atomic oxygen, and the second to formation of oxide structures.[183,184] A change in the yield of O^+ ions—by a factor of more than 20—has been observed also as a result of the thermal rearrangement of the (110) surface of Pt in the presence of oxygen.[163]

DSEE enables one to reveal the specific forms of interaction of particles of differing chemical nature on the surface of a solid, which can play the role of intermediate states in heterogeneous catalysis. For example, the DSEE of hydrogen adsorbed on tungsten that had been preliminarily saturated with oxygen or carbon monoxide established the existence of the k-state of hydrogen, which has the extremely large desorption cross section of $\sim 10^{-16}$ cm^2.[125,185] A sharp increase in the desorption cross section of hydrogen was found also in the presence of carbon monoxide on palladium.[186] Interaction between adsorbed particles also substantially affects the form of the energy distribution of desorbed ions.[187,188] For example, the presence of an impurity of carbon monoxide in an adsorbed layer of hydrogen on palladium led to the appearance in the energy distribution of H^+ ions of an extra maximum at higher energy and a shift of the maximum corresponding to the distribution of H^+ ions in the absence of carbon monoxide by ~ 2 eV toward lower energies (Fig. 17).

One can use DSEE to study the kinetics of catalytic heterogeneous reactions. This was demonstrated with the example of study of the oxidation of carbon monoxide on rhodium by recording the CO_2^+ ions.[111]

It is very promising to use DSEE to determine the localization of adsorbed particles on the surface of a solid and the character of their binding. For example, it has been shown that the state of oxygen active to DSEE on the (100) face of W involves oxygen atoms adsorbed atop single W atoms, and

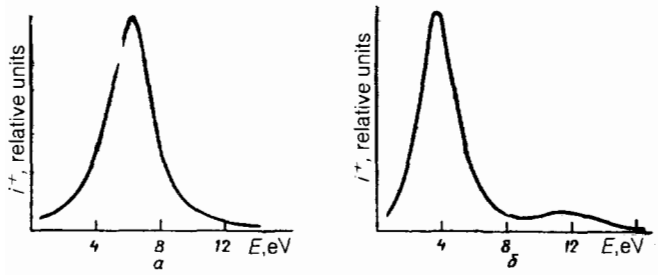

FIG. 17. Energy distribution of H^+ ions in DSEE from the surface of palladium from a saturated adsorbed layer: pure hydrogen (a) and gas mixture—90% H_2 + 10% CO (b).[188]

that the main channel of their excitation in DSEE is the formation of core vacancies in the $(4f + 5p_{3/2})$ levels of W.[153] Analysis of the dependences of the yield of H^+ ions on the energy of electrons bombarding the surface in the adsorption of water on the (111) face of Si showed unequivocally that water dissociates on this face at room temperature to form the states Si–H and Si–O–H.[189] It was possible on the basis of the temperature and energy dependences for O^+ ions to distinguish the molecular and dissociative forms of adsorption of NO on the (100) face of Pt.[190] It was possible by measuring the thresholds for appearance of a current of the ions O^+, OH^+, and H^+ in DSEE and comparing them with the energy-loss spectra of slow electrons (Fig. 18) that H atoms are selectively bound to Sr atoms in the adsorption of water on the complex compound $SrTiO_3$, while the OH radicals are bound to Ti atoms.[191]

It is especially informative in determining the bond direction of adsorbed particles at a surface and localizing them with respect to the unit cell of the surface atoms to analyze the angular distributions of desorbed ions[164,192,193] and neutrals in the ground and excited states.[62,83] The anisotropy of the angular distributions varies as a function of the temperature of the substrate and the concentration of adsorbate. Yet, nevertheless, a correlation of the pattern of the angular distributions with the symmetry of the adsorption sites on the surface is always maintained.

In most experiments it is possible to establish a correspondence between the direction of bonding of the adsorbed particles in the ground state and the angles of escape of the ions with account taken of the corresponding corrections for the distortion of the trajectories of the ions near the surface owing to the effect of the mirror-image forces and the microrelief of the surface.[136,137,141] In particular, such a correspondence was found for water and ammonia molecules[159,160] and a number of hydrocarbon molecules,[194–196] as well as for CO molecules on the surface of various molecules.[192,197–199]

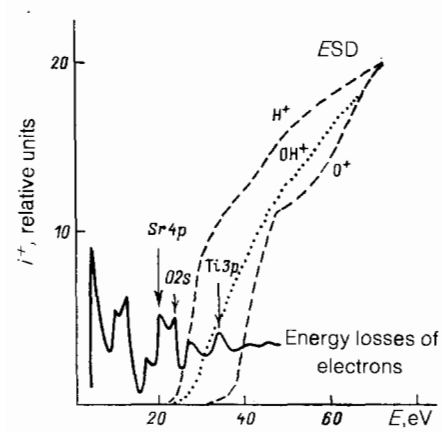

FIG. 18. Spectrum of energy losses of slow electrons and curves of the yield of O^+, OH^+, and H^+ ions in DSEE from the surface of $SrTiO_3$ as functions of the electron energy.[191] The arrows indicate the excitation energies of the corresponding levels.

These studies showed that the bonding direction of a particular molecule with the surface depends very strongly on the structure and the chemical nature of the substrate. For example, the CO molecule can "stand" on the substrate, forming a bond with it through the carbon atom (Ni(111), Ru(001)[174,175]), "tilt" its axis toward the plane of the substrate Pd(210)[210]), and even "lie" on the surface of the substrate, interacting with it through both atoms (CR(110)[201]). Polar molecules such as NH_3 and H_2O are bound in many cases with the surface through the N and O atoms, respectively. Here the bonding angle of the hydrogen atoms in the molecules differs appreciably for different substrates as compared with the angle in the free molecules.[202–204]

A detailed study of the angular distributions of desorbed CO^+ ions,[192] and also of CO molecules in the ground[62] and excited[83] states, revealed a distinct connection between the angular distributions with the lateral interactions between the particles in the adsorbed layer, which led to a substantial change in the preferential direction of desorption of the particles. For example, CO molecules on the (110) face of Ni at degrees of coverage of the surface greater than 0.75 increased the angle of inclination of the axis with respect to the normal to the surface by $\sim 20°$.[198]

Very interesting information on lateral interactions in adsorbed layers has been obtained by analyzing the change in angular distributions of ions as a function of the presence on the surface of metals of small amounts of impurities and defects. It turned out that impurities can substantially alter the character of binding of adsorbed molecules with the surface of a metal and bring about orientational order.[138] For example, it was shown that the presence of oxygen and bromine on the (110) face of Ag leads to formation of ordered bonding of H_2O molecules to the adlayer. Here bromine leads to a local ordering of the H_2O molecules, and oxygen to dissociation of the H_2O molecules and orientation of the produced OH particles in certain crystallographic directions. Here the orientation of the bonds of the hydrogen atoms in these two cases proves to be different with respect to the crystal structure of the surface.[160,205,206] An even stronger influence on the angular distribution of H^+ ions was found upon introducing small admixtures of Na [139] and Li [207] into an adsorbed layer of H_2O molecules on the (001) face of Ru. Lithium exerted the strongest action on the properties of the adsorbed layer of H_2O. Hence it is difficult to explain these effects by purely electrostatic considerations.[139,207]

Further studies along this line are extremely important for elucidating the mechanisms of action of promoters and poisons in heterogeneous catalytic reactions.

It is important in understanding the mechanism of heterogeneous catalytic reactions to elucidate the relation between the properties of adsorbed systems and the exis-

tence of long- or short-range order in the adsorbed layer. In principle, such information can be obtained by a joint application of the methods of angle-resolved DSEE and low-energy electron diffraction (LEED). Unfortunately, one can obtain such information relatively rarely, since, as a rule, LEED does not yield information on the adsorption states active in DSEE. However, in a number of cases, e.g., in studying oxides of refractory metals,[129,193] one can perform a joint study of the structure of the surface by the DSEE and LEED methods. The joint use of these methods allowed removing the ambiguity of interpretation of LEED patterns and establishing the existence on the surface of two different structures of WO_3 (111) and WO_3 (100) and of domains arising on the surface owing to incompletely formed oxide.[123] Such experiments show the expedience of joint application of DSEE and LEED to identify "extra" spots involving structural breakdown of a layer, since, in contrast to LEED, the study of the structure of a surface by the angle-resolved DSEE method does not require maintenance of long-range order in the layer. Therefore this method enables one to obtain unique information on adsorption at defects and on disordered adsorption systems that cannot be obtained by the LEED method.

Moreover, we can conclude from the already existing data on DSEE that, in a number of cases on the monocrystalline faces of metals having a high degree of symmetry, the preferred adsorption sites can be sites of low degree of symmetry. One must bear this in mind in building models of adsorption from LEED data.

6. Conclusion. The experimental material presented in this review convincingly indicates that DSEE currently is already a powerful method for analyzing solid surfaces and processes occurring there. In a number of cases it permits gaining information inaccessible by other methods of surface diagnostics.

The existing models of DSEE as yet describe this phenomenon only in general features and include rather many arbitrary parameters required for reconciling the results of calculation with the experimental data. Quantum-mechanical calculations have been performed only schematically within the framework of very restricted situations and are yet far from being applied to describe concrete experimental systems. The further development of the theory of DSEE primarily requires a harmonized account being taken of the different limiting stages of this complex process and of their dependence on the electronic structure of the substrate and the particles being desorbed. Therefore studies of DSEE jointly with other methods of surface diagnostics, especially electron spectroscopy, are currently acquiring great value.

The development of the theory of DSEE will enable expanding the possibilities of the DSEE method for analyzing surfaces of solids and will make possible the scientific foundations for prognosis and control of the radiation stability of adsorbed and film coatings with respect to excitation of their electronic subsystems. Many difficulties still lie along this pathway. However, certain rather general ideas on the radiation stability of the surface of a solid can be expressed on the basis of the currently existing views on the mechanism of DSEE. Since the direct excitation of valence electrons has a short lifetime, the fundamental pathway of primary electron excitation that leads to displacement of the nuclei is the excitation of the core electrons. Correspondingly, the simplest recommendation on the choice of radiation-stable systems consists in using elements with an ionization energy of the inner levels greater than the energy of the ionizing radiation or with an energy insufficient to bring about Auger processes. However, on the one hand, such a pathway restricts the energy level of the ionizing radiation, and on the other hand, it is little effective in the presence, e.g., of multiphoton processes.

A more universal way to increase the radiation stability of the surface of materials is to decrease the probability of displacement of the nuclei to interatomic distances owing to relaxation of electronic excitations. However, the practical realization of this method can face difficulties in principle, especially in the presence of different channels of excitation that lead to desorption of ions and neutrals and to relaxation of electronic excitations in several stages. In this case the closing of one desorption channel can increase the desorption through others. For example, as has been shown, for adsorption systems with an appreciable fraction of the ionic component of bonding, the probability of desorption of ions decreases as the relaxation of the electronic excitations of the substrate becomes faster, while the probability of desorption of neutrals decreases as this relaxation becomes slower. Usually the desorption cross sections of neutrals are greater than those for desorption of ions. Therefore, to increase the radiation stability of the surface one must first seek ways to suppress the desorption of neutrals. The existence of neutralization of ions and reionization of neutrals during their motion can substantially complicate the relaxation of electronic excitations, and correspondingly, the prognosis of radiation stability of a surface upon exciting the electronic subsystem.

The excitation of the electronic subsystem in semiconductors and dielectrics leads to creation and transformation of bulk point defects.[208] Here the major role in forming them is played by the appearance of Coulomb instability owing to redistribution of the electron density between the interacting particles.[209] Actually the energy of neutrals is considerably smaller than the energy of ions. Correspondingly, in the formation of bulk radiation defects the role of ions is more important than that of neutrals. Therefore, to increase the radiation stability of the bulk of a material one must decrease the lifetime of electronic excitations. Understandably, the radiation stability of semiconductors must be generally greater than for dielectrics, owing to shorter relaxation times of electronic excitations. In the case of metals one should not expect substantial formation of defects upon exciting the electronic subsystem.

[1]N. H. Tolk, M. M. Traum, J. C. Tully, and T. E. Madey (Eds.), *Desorption Induced by Electronic Transitions—DIET 1*, Springer-Verlag, Berlin, 1983 (Springer Series in Chemical Physics, Vol. 24).
[2]W. Brenig and D. Menzel (Eds.) *Desorption Induced by Electronic Transitions—DIET2*, Springer-Verlag, Berlin, 1985 (Springer Series in Surface Science, Vol. 4).
[3]V. N. Ageev and É. N. Kutsenko, Zh. Tekh. Fiz. 39, 1275 (1969). [Sov. Phys. Tech. Phys. 14, 958 (1969)].
[4]A. W. Jones, E. Jones, and E. M. Williams, Vacuum **23**, 227 (1973).
[5]S. A. Cohen and H. F. Dylla, J. Vac. Sci. Technol. **14**, 559 (1977).
[6]I. Arakawa and Y. Tuzi, J. Nucl. Mater. **128/129**, 779 (1984).
[7]C. G. Pantano and T. E. Madey, Appl. Surf. Sci. **7**, 115 (1981).
[8]T. E. Madey and R. Stockbauer, Meth. Exper. Phys. **22**, 465 (1985).
[9]T. J. Chuang, Surf. Sci. Rep. **3**, 1 (1983).
[10]P. D. Townsend and F. Lama, see Ref. 1, p. 220.
[11]M. L. Knotek and P. J. Feibelman, Surf. Sci. **90**, 78 (1979).

[12]T. O. Woodruff, Semicond. Insul. **5**, 431 (1983).
[13]V. N. Ageev and Yu. A. Kuznetsov, *Problems of Physical Electronics* (in Russian), FIT AN SSSR, L., 1987, p. 18.
[14]T. E. Madey and J. T. Yates, J. Vac. Sci. Technol. **8**, 525 (1971).
[15]M. L. Knotek, Phys. Scripta T**6**, 94 (1983).
[16]D. Menzel, Nucl. Instrum. Methods Ser. B **13**, 507 (1986).
[17]Ph. Avouris, F. Bozso, and R. E. Walkup, *ibid.* **27**, 136 (1987).
[18]T. E. Madey, J. Vac. Sci. Technol. Ser. A **4**, 257 (1986).
[19]T. E. Madey, Science **234**, 316 (1987).
[20]J. T. Yates, M. D. Alvey, K. W. Kolasinski, and M. J. Dresser, Nucl. Instrum. Methods Ser. B **27**, 147 (1987).
[21]V. N. Ageev, O. P. Burmistrova, A. I. Gubanov, M. N. Tkachuk, and B. V. Yakshinskiĭ, Poverkhnost' No. 12, 30 (1986) [Phys. Chem. Mech. Surf. (1986)].
[22]V. N. Ageev and N. I. Ionov, Prog. Surf. Sci. **5**, 1 (1974).
[23]D. Menzel, Topics Appl. Phys. **4**, 101 (1975).
[24]T. E. Madey and J. T. Yates, Surf. Sci. **63**, 203 (1977).
[25]V. N. Ageev, Poverkhnost' No. 4, 1 (1982) [Phys. Chem. Mech. Surf. (1982)].
[26]D. Menzel and R. Gomer, J. Chem. Phys. **41**, 3331 (1964).
[27]Ya. P. Zingerman and V. A. Ishchuk, Fiz. Tverd. Tela (Leningrad) **9**, 797 (1967) [Sov. Phys. Solid State **9**, 623 (1967)].
[28]P. A. Redhead, Can. J. Phys. **47**, 886 (1964).
[29]V. N. Ageev and S. T. Dzhalilov, Acta Univ. Wrat. No. 439, 19 (1978).
[30]T. R. Hayes and J. F. Evans, Surf. Sci. **159**, 466 (1985).
[31]D. Lichtman, *ibid.* **90**, 579 (1979).
[32]V. I. Zaporozhchenko, V. F. Kuleshov, N. M. Omel'yanovskaya, and A. V. Pokrovskiĭ, Poverkhnost' No. 4, 146 (1985) [Phys. Chem. Mech. Surf. (1985)].
[33]A. P. Dement'ev, E. M. Dubinina, and O. V. Rakovskaya, Poverkhnost' No. 2, 61 (1987) [Phys. Chem. Mech. Surf. (1987)].
[34]E. R. Moog, J. Unguris, and M. B. Webb, Surf. Sci. **134**, 849 (1983).
[35]A. P. Koshcheev and I. A. Myasnikov, Poverkhnost', No. 1, 39 (1986) [Phys. Chem. Mech. Surf. (1986)].
[36]A. G. Naumovets and A. G. Fedorus, Zh. Eksp. Teor. Fiz. **68**, 1183 (1975) [Sov. Phys. JETP **41**, 587 (1975)].
[37]J. T. Yates, T. E. Madey, and J. K. Payn, Nuovo Cimento Suppl. **5**, 558 (1967).
[38]P. A. Redhead, *ibid.*, p. 586.
[39]G. E. Moore, J. Appl. Phys. **32**, 1241 (1961).
[40]V. N. Ageev and B. V. Yakshinskiĭ, Fiz. Tverd. Tela (Leningrad) **27**, 99 (1985) [Sov. Phys. Solid State **27**, 57 (1985)].
[41]E. Yasue, T. Gotoh, A. Ichimiya, Y. Kawaguchi, M. Kotani, S. Ohtani, Y. Shigeta, S. Takagi, Y. Tazawa, and G. Tominaga, Jpn. J. Appl. Phys. **25**, L363 (1986).
[42]V. M. Bermudez, T. M. Parrill, and R. Kaplan, Surf. Sci. **173**, 234 (1986).
[43]M. L. Knotek, J. O. Jones, and V. Rehn, Phys. Rev. Lett. **43**, 300 (1979).
[44]J. O. Noell and R. H. Stulen, Surf. Sci. **157**, 119 (1985).
[45]A. Kh. Ayukhanov and É. Turmashev, Zh. Tekh. Fiz. **47**, 2216 (1977) [Sov. Phys. Tech. Phys. **22**, 1289 (1977)].
[46]J. L. Hock and D. Lichtman, Surf. Sci. **77**, L184 (1978).
[47]M. L. Yu, Phys. Rev. B **19**, 5995 (1979).
[48]L. Sanche and L. Parenteau, J. Vac. Sci. Technol. Ser. A **4**, 1240 (1986).
[49]T. E. Madey and J. T. Yates, *ibid.* **8**, 39 (1971).
[50]K. W. Ashcroft, J. H. Leck, D. R. Sandström, B. P. Stimpson, and E. M. Williams, J. Phys. E **5**, 1106 (1972).
[51]V. N. Ageev, S. T. Dzhalilov, N. I. Ionov, and N. D. Potekhina, Zh. Tekh. Fiz. **46**, 1019 (1976) [Sov. Phys. Tech. Phys. **21**, 596 (1976)].
[52]H. Niehus and E. Bauer, Rev. Sci. Instrum. **46**, 1275 (1975).
[53]M. Nishijima and F. P. Propst, Phys. Rev. B **2**, 2368 (1970).
[54]M. M. Traum and D. P. Woodruff, J. Vac. Sci. Technol. **17**, 1202 (1980).
[55]S. T. Dzhalilov, Izv. Akad. Nauk SSSR Ser. Fiz. **49**, 1692 (1985) [Bull. Acad. Sci. USSR, Phys. Ser. **49**(9), 26 (1985)].
[56]J. C. Lin and R. Gomer, Surf. Sci. **172**, 1 (1986).
[57]D. P. Woodruff, P. D. Johnson, M. M. Traum, H. H. Farrell, N. V. Smith, R. L. Benbow, and Z. Hurich, *ibid.* **104**, 282 (1981).
[58]E. B. Saloman, Appl. Opt. **14**, 1391 (1975).
[59]J. J. Czyzewski, T. E. Madey, and J. T. Yates, Phys. Rev. Lett. **32**, 777 (1974).
[60]H. Niehus, Surf. Sci. **78**, 667 (1978).
[61]R. Jaeger and D. Menzel, *ibid.* **93**, 71 (1980).
[62]P. Feulner, W. Riedl, and D. Menzel, Phys. Rev. Lett. **50**, 986 (1983).
[63]V. N. Ageev, N. I. Ionov, B. K. Medvedev, and B. V. Yakshinskiĭ, Fiz. Tverd. Tela (Leningrad) **20**, 1334 (1978) [Sov. Phys. Solid State **20**, 767 (1978)].
[64]V. N. Ageev, Yu. A. Kuznetsov, and B. V. Yakshinskiĭ, *ibid.* **24**, 349 (1982) [Sov. Phys. Solid State **24**, 199 (1982)].
[65]P. Feulner, D. Menzel, H. J. Kreuzer, and Z. W. Gortel, Phys. Rev. Lett. **53**, 671 (1984).
[66]P. Feulner, see Ref. 2, p. 142.
[67]P. Feulner, R. Treichler, and D. Menzel, Phys. Rev. B **24**, 7427 (1981).
[68]J. Rubio, J. M. López-Sancho, and M. P. López-Sancho, J. Vac. Sci. Technol. **20**, 217 (1982).
[69]M. P. López-Sancho, J. Rubio, and J. M. López-Sancho, Anal. Fis. Ser. B **80**, 160 (1984).
[70]H. Kanzaki and T. Mori, Phys. Rev. B **29**, 3573 (1984).
[71]Y. Shapira and A. Friedenberg, Semicond. Insul. **5**, 571 (1983).
[72]Q.-J. Zhang, R. Gomer, and D. R. Bowman, Surf. Sci. **129**, 535 (1983).
[73]R. H. Stulen, see Ref. 2, p. 130.
[74]G. G. Fedorov, Vestn. Mosk. Univ. Fiz. Astron. **23**, No. 1, 60 (1982).
[75]O. F. Pozdnyakov, É. N. Kutsenko, A. A. Pulatov, and V. V. Shalimov, Vysokomol. Soedin. **25**, No. 1, 9 (1983) [Polymer Sci. USSR (1983)].
[76]N. I. Ionov and É. Ya. Zandberg, Surface Ionization (in Russian), Nauka, M., 1969.
[77]A. R. Burns, Phys. Rev. Lett. **55**, 525 (1985).
[78]A. R. Burns, J. Vac. Sci. Technol. Ser. A **4**, 1499 (1986).
[79]A. R. Burns, E. B. Stechel, and D. R. Jennison, Phys. Rev. Lett. **58**, 250 (1987).
[80]R. Clampitt, Polymer **10**, 721 (1969).
[81]I. G. Newsham, J. V. Hogue, and D. R. Sandström, J. Vac. Sci. Technol. **9**, 596 (1972).
[82]I. G. Newsham and D. R. Sandström, *ibid.* **10**, 39 (1973).
[83]M. D. Alvey, M. J. Dresser, and J. T. Yates, Phys. Rev. Lett. **56**, 367 (1986).
[84]D. R. Sandström, M. J. Dresser, and W. D. Dong, Phys. Rev. B **34**, 5125 (1986).
[85]N. H. Tolk, L. C. Feldman, J. S. Kraus, R. J. Morris, T. R. Pian, M. M. Traum, and J. C. Tully, Springer Ser. Chem. Phys. **17**, 112 (1981).
[86]N. H. Tolk, W. E. Collins, J. S. Kraus, R. J. Morris, T. R. Pian, M. M. Traum, N. G. Stoffel, and G. Margaritondo, *ibid.* **24**, 156 (1983).
[87]N. H. Tolk, P. Bucksbaum, N. Gershenfeld, J. S. Kraus, R. J. Morris, D. E. Murnick, J. C. Tully, R. R. Daniels, G. Margaritondo, and N. G. Stoffel, Nucl. Instrum. Methods Ser. B **2**, 457 (1984).
[88]N. H. Tolk, R. F. Haglund, M. H. Mendenhall, E. Taglauer, and N. G. Stoffel, see Ref. 2, p. 152.
[89]E. Taglauer, N. Tolk, R. Riedel, E. Colavita, G. Margaritondo, N. Gershenfeld, G. Loubriel, A. Bommanavar, M. Bakshi, and Z. Huric, Surf. Sci. **169**, 267 (1986).
[90]R. F. Haglund, R. G. Albridge, D. W. Cherry, R. K. Cole, M. H. Mendenhall, W. C. B. Peatman, N. H. Tolk, D. Neils, G. Margaritondo, N. G. Stoffel, and E. Taglauer, Nucl. Instrum. Methods Ser. B **13**, 525 (1986).
[91]V. M. Bermudez and M. A. Hoffbauer, Phys. Rev. B. **30**, 1125 (1984).
[92]R. Beigang, F. Bozso, Ph. Avouris, and R. Walkup, Nucl. Instrum. Methods Ser. B **13**, 541 (1986).
[93]Ph. Avouris, R. Beigang, F. Bozso, and R. Walkup, Chem. Phys. Lett. **129**, 505 (1986).
[94]N. G. Stoffel, R. Riedel, E. Colavita, G. Margaritondo, R. F. Haglund, E. Taglauer, and N. H. Tolk, Phys. Rev. B **32**, 6805 (1985).
[95]H. Sambe, M. Yousif, and D. E. Ramaker, J. Vac. Sci. Technol. Ser. A **2**, 1011 (1984).
[96]F. Coletti, J. M. Debever, and G. Zimmerer, J. Phys. Lett. (Paris) **45**, L468 (1984).
[97]R. A. Rosenberg, J. Vac. Sci. Technol. A **4**, 1463 (1986).
[98]D. E. Ramaker, *ibid.* A **1**, 1137 (1983).
[99]D. Menzel, Ultramicrosc. **14**, 175 (1984).
[100]P. Feulner, S. Auer, W. Riedl, A. Cassuto, and D. Menzel, Surf. Sci. **182**, L221 (1987).
[101]M. L. Knotek, Rep. Prog. Phys. **47**, 1499 (1984).
[102]H. Niehus and W. Losch, Surf. Sci. **111**, 344 (1981).
[103]P. Williams and G. Gillen, *ibid.* **180**, L109 (1987).
[104]J. A. Kelber and M. L. Knotek, Phys. Rev. B **30**, 400 (1984).
[105]M. A. B. Moraes and D. de Lichtman, Surf. Sci. **160**, 362 (1985).
[106]T. R. Pian, M. M. Traum, J. S. Kraus, N. H. Tolk, N. G. Stoffel, and G. Margaritondo, *ibid.* **128**, 13 (1983).
[107]C. C. Parks, Z. Hussain, D. A. Shirley, M. L. Knotek, G. Loubriel, and R. A. Rosenberg, Phys. Rev. B **28**, 4793 (1983).
[108]C. C. Parks, D. A. Shirley, and G. Loubriel, *ibid.* **29**, 4709 (1984).
[109]G. R. Floyd and R. H. Prince, Surf. Sci. **59**, 631 (1976).
[110]R. Treichler, W. Riedl, W. Wurth, P. Feulner, and D. Menzel, Phys. Rev. Lett. **54**, 462 (1985).
[111]N. V. Hieu and J. H. Craig, Appl. Surf. Sci. **20**, 121 (1984).
[112]M. L. Knotek, J. O. Jones, and V. Rehn, Surf. Sci. **102**, 566 (1981).
[113]I. W. Owen, N. B. Brooks, C. H. Richardson, D. R. Warburton, F. Quinn, D. Norman, and G. Thornton, *ibid.* **178**, 897 (1986).
[114]M. Bernheim, M. Chaintreau, R. Dennebouy, and G. Slodzian, *ibid.* **126**, 610 (1983).
[115]Q.-J. Zhang and R. Gomer, *ibid.* **109**, 567 (1981).
[116]N. H. Tolk, M. M. Traum, J. S. Kraus, T. R. Pian, W. E. Collins, N. G. Stoffel, and G. Margaritondo, Phys. Rev. Lett. **49**, 812 (1982).
[117]V. N. Ageev, O. P. Burmistrova, and B. V. Yakshinskii, Surf. Sci. **194**,

101 (1988).
[118]M. L. Knotek, see Ref. 1, p. 139.
[119]R. Franchy and D. Menzel, Phys. Rev. Lett. **43**, 865 (1979).
[120]D. Menzel, J. Vac. Sci. Technol. **20**, 538 (1982).
[121]V. N. Ageev, O. P. Burmistrova, and Yu. A. Kuznetsov, Fiz. Tverd. Tela (Leningrad) **29**, 1740 (1987) [Sov. Phys. Solid State **29**, 1000 (1987)].
[122]C. Park, M. Kramer, and E. Bauer, Surf. Sci. **109**, L533 (1981).
[123]H. Niehus, Appl. Surf. Sci. **13**, 292 (1982).
[124]F. J. Himpsel, Semicond. Insul. **5**, 419 (1983).
[125]W. Jelend and D. Menzel, Chem. Phys. Lett. **21**, 178 (1973).
[126]V. N. Ageev and S. G. Kasabov, Poverkhnost', No. 11, 31 (1983) [Phys. Chem. Mech. Surf. (1983)].
[127]T. E. Madey, J. T. Yates, D. A. King, and C. J. Uhlaner, J. Chem. Phys. **52**, 5215 (1970).
[128]M. L. Knotek and P. J. Feibelman, Phys. Rev. Lett. **40**, 964 (1978).
[129]M. L. Knotek and P. J. Feibelman, Surf. Sci. **90**, 78 (1979).
[130]R. Gomer, see Ref. 1, p. 40.
[131]D. Menzel, Surf. Sci. **14**, 340 (1969).
[132]J. T. Gersten, R. Janow, and N. Tsoar, Phys. Rev. Lett. **36**, 610 (1976).
[133]W. L. Clinton, *ibid.* **39**, 965 (1977).
[134]W. L. Clinton, Surf. Sci. **112**, L791 (1981).
[135]R. A. Gibbs, S. P. Holland, H. E. Foley, B. J. Garrison, and S. P. Winograd, Phys. Rev. B **24**, 6178 (1981).
[136]A. Mišković, J. Vukanić, and T. E. Madey, Surf. Sci. **169**, 405 (1986).
[137]Z. Mišković, J. Vukanić, and T. E. Madey, *ibid.* **141**, 285 (1984).
[138]T. E. Madey, C. Benndorf, N. D. Shinn, Z. Mišković, and J. Vukanić, see Ref. 2, p. 104.
[139]F. P. Netzer, D. L. Doering, and T. E. Madey, Surf. Sci. **143**, L363 (1984).
[140]M. D. Alvey, M. J. Dresser, and J. T. Yates, *ibid.* **165**, 447 (1986).
[141]W. L. Clinton and S. Pal, Phys. Rev. B **35**, 2991 (1987).
[142]W. Brenig, Z. Phys. B **23**, 361 (1976).
[143]W. Brenig, J. Phys. Soc. Jpn. **51**, 1914 (1982).
[144]P. Schuck and W. Brenig, Z. Phys. B **42**, 137 (1982).
[145]K. F. Freed, Surf. Sci. **122**, 317 (1982).
[146]P. R. Antoniewicz, Phys. Rev. B **21**, 3811 (1980).
[147]O. P. Burmistrova, Poverkhnost', No. 10, 21 (1985) [Phys. Chem. Mech. Surf. (1985)].
[148]P. J. Feibelman, Surf. Sci. **102**, L51 (1981).
[149]P. J. Feibelman, see Ref. 1, p. 61.
[150]D. E. Ramaker, C. T. White, and J. S. Murday, J. Vac. Sci. Technol. **18**, 748 (1981).
[151]D. E. Ramaker, C. T. White, and J. S. Murday, Phys. Lett. A **89**, 211 (1982).
[152]W. Brenig, see Ref. 1, p. 90.
[153]S. L. Weng, Phys. Rev. B **23**, 1699 (1981).
[154]N. D. Shinn and T. E. Madey, Surf. Sci. **180**, 615 (1987).
[155]R. Stockbauer, D. M. Hansson, S. A. Flodström, E. Bertel, and T. E. Madey, Phys. Scripta T4, 126 (1983).
[156]H. C. Gerritsen, M. P. Brujin, H. Verhoeven, and M. J. van der Wiel, Surf. Sci. **139**, 16 (1984).
[157]M. Störi, P. Braun, and R. Gomer, *ibid.* **141**, 654.
[158]E. B. Stechel and M. L. Knotek, *ibid.* **167**, 297 (1986).
[159]C. Benndorf and T. E. Madey, Chem. Phys. Lett. **101**, 59 (1983).
[160]J. Bange, T. E. Madey, and J. K. Sass, Surf. Sci. **162**, 251 (1985).
[161]F. Bozso and Ph. Avouris, Chem. Phys. Lett. **125**, 531 (1986).
[162]D. Lichtman, J. Nucl. Mater. **53**, 285 (1974).
[163]V. S. Sundaram and P. H. Dawson, Surf. Sci. **146**, L593 (1984).
[164]K. Bange, T. E. Madey, and J. K. Sass, Chem. Phys. Lett. **113**, 56 (1985).
[165]R. Kurtz, Surf. Sci. **177**, 526 (1986).
[166]Y. Yanagisawa, J. Phys. Soc. Jpn. **55**, 3479 (1986).
[167]R. Jaeger, J. Stöhr, and T. Kendelewicz, Phys. Rev. B **28**, 1145 (1983).
[168]J. Schmidt-May, F. Sehf, J. Voss, C. Kunz, S. A. Flodström, R. Nyholm, and R. Stockbauer, see Ref. 2, p. 94.
[169]E. Bertel, R. Stockbauer, R. L. Kurtz, D. E. Ramaker, and T. E. Madey, Phys. Rev. B **31**, 5580 (1985).
[170]F. L. Hutson, D. E. Ramaker, V. M. Bermudez, and M. A. Hoffbauer, J. Vac. Sci. Technol. Ser. A. **3**, 1657 (1985).
[171]D. E. Ramaker, Nucl. Instrum. Methods Ser. B **13**, 544 (1986).
[172]E. Bauer and H. Poppa, Surf. Sci. **88**, 31 (1979).
[173]C. Steinbruchel and R. Gomer. *ibid.* **67**, 21 (1977).
[174]F. P. Netzer and T. E. Madey, J. Chem. Phys. **76**, 710 (1982).
[175]T. E. Madey, Surf. Sci. **79**, 575 (1979).
[176]V. N. Ageev, A. I. Gubanov, S. T. Dzhalilov, and L. F. Ivantsov, Zh. Tekh. Fiz. **46**, 2600 (1976) [Sov. Phys. Tech. Phys. **21**, 1535 (1976)].
[177]V. N. Ageev and S. T. Dzhalilov, *ibid.* **47**, 2540 (1977) [Sov. Phys. Tech. Phys. **22**, 1473 (1977)].
[178]G. D. Kubiak and R. H. Stulen, J. Vac. Sci. Technol. Ser. A **4**, 1427 (1986).
[179]D. Menzel, Ber. Bunsenges. Phys. Chem. **72**, 591 (1968).
[180]R. Opila and R. Gomer, Surf. Sci. **129**, 563 (1983).
[181]J. L. Hock, J. H. Craig, and D. Lichtman, *ibid.* **87**, 31 (1979).
[182]N. V. Hieu and J. H. Craig, *ibid.* **150**, L93 (1985).
[183]V. N. Ageev and N. I. Ionov, Zh. Tekh. Fiz. **39**, 1523 (1969) [Sov. Phys. Tech. Phys. **14**, 1142 (1970)].
[184]V. N. Ageev and N. I. Ionov, Fiz. Tverd. Tela (Leningrad) **11**, 3200 (1969) [Sov. Phys. Solid State **11**, 2593 (1970)].
[185]T. E. Madey, Surf. Sci. **29**, 571 (1972).
[186]M. P. Kiskinova and G. M. Bliznakov, *ibid.* **123**, 61 (1982).
[187]J. H. Craig, *ibid.* **111**, L695 (1981).
[188]N. V. Hieu and J. H. Craig, *ibid.* **160**, L483 (1985).
[189]R. A. Rosenberg, P. J. Love, V. Rehn, I. Owen, and G. Thornton, J. Vac. Sci. Technol. Ser. A **4**, 1451 (1986).
[190]U. Schwalke, H. Niehus, and G. Comsa, Surf. Sci. **137**, 23 (1984).
[191]M. L. Knotek, *ibid.* **101**, 334 (1980).
[192]M. J. Dresser, M. D. Alvey, and J. T. Yates, J. Vac. Sci. Technol. Ser. A 4, 1446 (1986).
[193]R. L. Kurtz, R. Stockbauer, and T. E. Madey, Nucl. Instrum. Methods Ser. B **13**, 518 (1986).
[194]T. E. Madey and J. T. Yates, Surf. Sci. **76**, 397 (1978).
[195]J. U. Mack, E. Bertel, and F. P. Netzer, *ibid.* **159**, 265 (1985).
[196]M. D. Alvey, K. W. Kolasinski, J. T. Yates, Jr., and M. Head-Gordon, J. Chem. Phys. **85**, 6093 (1986).
[197]N. D. Shinn and T. E. Madey, *ibid.* **83**, 5928 (1985).
[198]W. Riedl and D. Menzel, Surf. Sci. **163**, 39 (1985).
[199]M. D. Alvey, A.-M. Lanzilotto, and J. T. Yates, *ibid.* **177**, 278 (1986).
[200]T. E. Madey, J. T. Yates, A. M. Bradshaw, and F. M. Hoffmann, *ibid.* **89**, 370 (1979).
[201]N. D. Shinn and T. E. Madey, Phys. Rev. Lett. **53**, 2481 (1984).
[202]T. E. Madey, J. E. Houston, C. W. Seabury, and T. N. Rhodin, J. Vac. Sci. Technol. **18**, 476 (1981).
[203]F. P. Netzer and T. E. Madey, Phys. Rev. Lett. **47**, 928 (1981).
[204]T. E. Madey and J. T. Yates, Chem. Phys. Lett. **51**, 77 (1977).
[205]K. Bange, J. K. Sass, and T. E. Madey, Surf. Sci. **152/153**, 550 (1985).
[206]K. Bange, T. E. Madey, J. K. Sass, and E. M. Stuve, *ibid.* **183**, 334 (1987).
[207]S. Semančik, D. L. Doering, and T. E. Madey, J. Vac. Sci. Technol. Ser. A **3**, 1571 (1985).
[208]M. I. Klinger, Ch. B. Lushchik, T. V. Mashovets, G. A. Kholodar', M. K. Sheĭnkman, and M. A. Élango, Usp. Fiz. Nauk **147**, 523 (1985) [Sov. Phys. Usp. **28**, 994 (1985)].
[209]M. Elango, and A. E. Kiv, Cryst. Latt. Def. Amorph. Mat. **11**, 305 (1986).

Translated by M. V. King