The Cyclotron of the A. F. Ioffe Physico-Technical Institute of the Academy of Sciences of the USSR (on the fortieth anniversary of its startup)

I. Kh. Lemberg, V. O. Naĭdenov, and V. Ya. Frenkel'

A. F. Ioffe Physico-Technical Institute, Academy of Sciences of the USSR, Leningrad
Usp. Fiz. Nauk **153**, 497–519 (November 1987)

The article describes the planning and construction of the Physico-Technical Institute cyclotron, the fortieth anniversary of the startup of which was observed in 1986. A review of the principal results of the work of the cyclotron laboratory is given: the production of microquantities of plutonium, the measurement of neutron cross sections, and the results of systematic investigations of the Coulomb excitation of nuclear levels by means of ions accelerated in the cyclotron (from He to Ar) and investigations of highly excited and high-spin states of nuclei with $A < 100$. Special attention is given to applied studies carried out using the cyclotron—the production of semiconductor devices by means of implantation and the development of new methods of study of the composition of surface layers of solids.

1. HISTORY OF THE CONSTRUCTION. FIRST OPERATION

I. V. Kurchatov and A. I. Alikhanov, on whose initiative, with the support of A. F. Ioffe, the cyclotron at the Physico-Technical Institute was built, could hardly have foreseen the specific content or even the direction of the studies carried out in it. However, they had no doubt about the necessity of this device so novel in design, purpose, and possibilities. They had great hopes for it and did everything possible to bring it into being. In fact, the cyclotron has already been operating for forty years, has not become obsolete, and is finding completely new fields of use. Therefore we think it is appropriate to tell about this cyclotron, construction of which was first discussed about half a century ago, and on which construction began before World War II. The corresponding work was carried on up to 1941 and essentially completed, but was then cut off by the war.

Work on the completion and startup of the cyclotron was renewed until the project was complete in 1946, so that 1986 is the fortieth anniversary of this cyclotron, the only one in the country which has such a long and continuous period of operation (Fig. 1). Below we shall trace the history of the planning, construction, and putting into operation of the cyclotron and report the principal scientific and practical results obtained in the course of the research carried out in this machine, from comparatively early results up to the very latest.

In a review of the history of accelerators,[1] the author correctly remarks that the idea of artificially accelerated charged particles (in contrast to naturally accelerated particals generated by radioactive elements), in spite of its simplicity and obvious nature, should not be considered obvious, and the oblivion to which we have consigned the author of the idea seems unjustified. From this point of view we shall point out that in an account of the problems and activities of the State X-Ray and Radiological Institute (from which in 1921 the Physico-Technical Institute and the Radium Institute emerged as independent scientific institutions) L. V. Mysovskiĭ wrote as follows: "The state X-Ray Institute, which is occupied with the radiation from the inner electron rings, naturally turns its attention to the nucleus itself. Academician A. F. Ioffe expressed the idea that it would not be long until the central questions of physics would be the phenomena occurring in the nucleus of the atom—the phenomena of radioactivity, and at that time (in 1918) he indicated the probability before long of obtaining the phenomena of radioactivity by artificial means" (Ref. 2, page 11). This idea was published for the first time in an article by Mysovskiĭ and V. N. Rukavishnikov, which appeared in 1923.[3]

It is interesting to note (see for example page 339 of Ref. 1) that, starting in 1924, Chadwick tried for a number of years without success to persuade Rutherford to work with artificially accelerated particles.

During the twenties at the Physico-Technical Institute (PTI) L. S. Termen[4] and A. A. Chernyshev[5] were occupied with problems of particle acceleration; at the end of the decade these studies, like those on high-voltage technology (A. K. Val'ter and K. D. Sinel'nikov) were transferred to

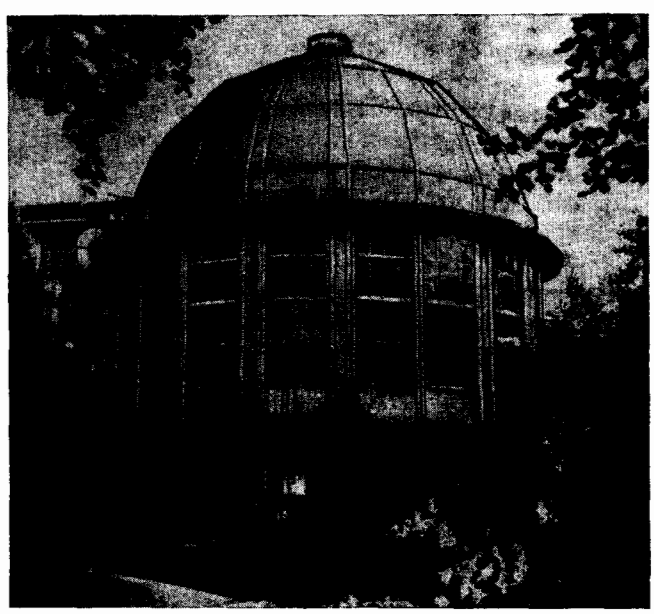

FIG. 1. Cyclotron building at the A. F. Ioffe Physico-Technical Institute, USSR Academy of Sciences.

 0038-5670/87/110993-14$01.80

Khar'kov, where a large group of PTI staff transferred from Leningrad to a newly organized institute headed by I. V. Obreimov (see for example Refs. 6 and 7).

New and powerful motivations for research on accelerators were provided by the year 1932, a year of miracles in nuclear physics. In the Soviet Union these studies began to be developed in parallel at the Physics Division of the Radium Institute, headed since 1922 by L. V. Mysovskiĭ, and in a special group on the nucleus which subsequently became the Division of Nuclear Physics at the Physico-Technical Institute, headed since 1933 by I. V. Kurchatov. The year 1932 is remarkable also for the fact that in the United States Lawrence's first large cyclotron began to operate (electromagnet pole diameter 114 cm, magnetic field 15 kOe), with acceleration of H_2^+ ions to energy of 3.6 MeV.

Already in 1933 a brilliant colleague of Kurchatov—M. A. Eremeev—designed, built, and put into operation a small model of a cyclotron—the baby cyclotron as it was called at the Physico-Technical Institute, which turned out to be the first cyclic accelerator on the European continent. The baby cyclotron was an instrument of height 1.7 m with pole diameter 28 cm; the electromagnet weighed about 2 metric tons.[8] In 1934 it was still the only cyclic accelerator operating outside Lawrence's laboratory at the University of California. The current of the proton beam with energy of 500 keV was of the order of 10^{-10} A.

The baby cyclotron turned out, however, not to have a very long operating life—no physics experiments were carried out with it. This is explained by several factors, primarily the fact that in 1934 at Kurchatov's laboratory a linear accelerator began to operate. This was the type of accelerator used in the well-known work of Cockroft and Walton and gave protons of approximately the same energy as the baby cyclotron but was more compact and apparently more stable in operation. Kurchatov and his colleagues at the Institute used this machine to carry out their first studies of nuclear reactions. In addition, in the annual report of the Physico-Technical Institute for 1934 it was stated that it had been decided not to allocate resources to perfection of the cyclotron, as a result of work being carried on at the Radium Institute on construction of a much larger machine with a planned output energy of deuterons about 10 MeV.

However, the value of the baby cyclotron cannot be underestimated: work with this machine provided the school for the Physico-Technical Institute personnel which enabled them subsequently to tune up the Radium Institute Cyclotron and to design and calculate the cyclotron at the Leningrad Physico-Technical Institute.

The history of the construction of the Radium Institute cyclotron has been given in detail in Ref. 9. This work is due first of all to the initiative of L. V. Mysovskiĭ,[1)] beginning in 1932. The assembly and adjustment of the Radium Institute cyclotron occupied directly about two years: 1935 and 1936; see Ref. 9, part 1, page 20. In addition to Mysovskiĭ, D. G. Alkhazov, and V. N. Rukavishnikov played major roles in this work. From materials on the personal affairs of Mysovskiĭ preserved at the Radium Institute it follows that on starting work on planning and construction of the cyclotron, he wrote to Lawrence and received from him detailed information on the experimental procedures which were used in preparation of cyclotron chambers. In the autumn of 1934 Lawrence wrote to Mysovskiĭ that he saw A. F. Ioffe at the Solvay Congress at Brussels, learned of the progress with the construction of a cyclotron in the USSR, and even saw a photograph of its magnet. Lawrence invited Mysovskiĭ to Berkeley to get acquainted with the work on cyclic accelerators which had been carried on in his laboratory. It is interesting to note that, according to the recollection of Mysovskiĭ's prewar colleague at the Leningrad Physico-Technical Institute Professor S. Ya. Nikitin, already after the beginning of World War II, in the evacuation to Kazan', he observed diagrams of the vacuum chamber of one of the Lawrence cyclotrons. Evidently these were just the drawings obtained by Mysovskiĭ. In their time they helped to accelerate work on planning the chamber of the cyclotron at the Leningrad Physico-Technical Institute (L. M. Nemenov was occupied in this work). Nikitin handed over the drawings to the chief engineer of the cyclotron, A. F. Zhigulev, who at that time had transferred to work at Moscow with I. V. Kurchatov.

Already at this time the nuclear specialists at the Physico-Technical Institute were carrying out plans for construction of their large cyclotron. The first official mention of the necessity of the corresponding work is found in the materials of the Scientific Council of the institute, where in the minutes of a conference held on 26 September 1936 we read: "Reported: The statement of the nuclear group regarding the need for a Lawrence apparatus. Resolved: To include in the plan of operation of the Institute for 1937 the construction of a Lawrence apparatus of ten million volts and to provide resources and funds for its operation".[10] Beginning on January 1, 1937 A. I. Alikhanov and I. V. Kurchatov became consultants to the Physics Division of the Radium Institute, and in August 1937 Kurchatov took over the leadership of the Cyclotron Laboratory at that institute—one of four laboratories into which the Physics Division was divided. In their collaboration with their colleagues in the Radium Institute, the Physico-Technical Institute staff received much in return: they accumulated experience necessary for their further work on planning and construction of the accelerator at the Physico-Technical Institute, and they used the Radium Institute cyclotron (which began normal operation in July 1937) for carrying out experimental studies on nuclear reactions and neutron physics.

I. V. Kurchatov, with his ever-present energy and on the basis of his experience with organization at the Radium Institute, immediately communicated with the Leningrad factories which had filled orders for the Radium Institute cyclotron (Élektrosila, Krasnyĭ Vyborzhets, Svetlana, etc.). In addition, he entered into close contact with the staff of various departments at the M. I. Kalinin Leningrad Polytechnic Institute and arranged for them to carry out calculations on the electromagnet for the Physico-Technical Institute cyclotron and also to investigate questions related to provision of a uniform magnetic field in the magnet gap and calculation of accelerated-particle trajectories, with inclusion of the relativistic correction to their mass, and shimming the field shape to provide synchronism. The program of these studies was formulated in April 1936, i.e., before the decision of the Scientific Council mentioned above, which to some extent summed up preliminary work already carried out.[2)]

An important step in the work was the official letter from A. F. Ioffe, undoubtedly written by the staff of the

TABLE I.

Country	Number of cyclotrons built	Number of cyclotrons under construction	Quantity of radium in laboratories, grams	Year of start-up of cyclotrons
USA	3	5	5	—
England	—	1	5	1939
France	—	1	7	1938
Denmark	—	1	2	1938

Nuclear Physics Division, to People's Commissar G. K. Ordzhonikidze (January 1937), justifying the need for construction of the cyclotron at the Physico-Technical Institute (Ref. 2, pages 14–17). The letter briefly set forth the situation, summarizing the world research in nuclear physics and the technical resources necessary to assure progress in this research. An interesting point of the letter is a table of the cyclotrons operating or being built at that time. We give here this table, having added to it the last column. (See Table I.)

After justifying the importance of the studies mentioned, the letter speaks of the specific measures which will assure their success. They included allocation of funding which at that time was substantial (650 000 rubles), inclusion of the work of Leningrad factories and industrial organizations of other cities, and so forth.

That the requests of the Physico-Technical Institute staff were regarded as well founded, we can judge from the fact that they were followed on October 4, 1937 by a new request with justifications this time to the Research Sector on Invention of the People's Commissariat of Heavy Industry, with a detailed enumeration of the work being carried on, indication of the personnel involved, and the funds necessary for their accomplishment.

Work continued on a broad front: At the end of 1937 builders were brought in, and in June 1939 a government decree was adopted (the Economic Council of the People's Commissariat) on allocation of funds for construction of a cyclotron (Ref. 8, page 92). The principal scientific workers at the Physico-Technical Institute occupied with the cyclotron were, in addition to I. V. Kurchatov and A. I. Alikhanov, L. M. Nemenov, P. Ya. Glazunov, and Ya. L. Khurgin. Khurgin was a very talented physicist and theoretician (he died during the war), and he was responsible for important calculations on focusing and the dynamics of particles in the cyclotron.

In addition to organizational problems in building the cyclotron, there was the important problem of funds. The senior staff members of the Physico-Technical Institute recall that the nonferrous metals needed for the cyclotron were obtained by exchange for scrap nonferrous metal. Where was this obtained? It turns out that it was bought in the nonferrous second-hand stores with the personal funds of A. I. Alkhanov, L. A. Artsimovich, and I. V. Kurchatov! Major assistance in obtaining other materials was provided by the extraordinarily energetic head of the Supply Division of the prewar Physico-Technical Institute, M. L. Gotsban.

The cornerstone of the cyclotron building was laid on September 22, 1939. At this time the foundation was already dug under the building. The first brick was laid by A. F. Ioffe, and the next by I. V. Kurchatov. They both attended a meeting held at the construction site. To give the entire procedure a more ceremonial nature, in the foundation was buried a small tube containing a stainless steel plate on which was engraved the following text:

"In accordance with the decree of the Economic Council of the Council of People's Commissars of the Union of Soviet Socialist Republics on June 7, 1939 the foundation was laid for the cyclotron of the Leningrad Physico-Technical Institute on September 22, 1939 according to the plan of Professor A. I. Alikhanov and Professor I. V. Kurchatov in the presence of the director of the Institute, Academician A. F. Ioffe." On the reverse of the plate is the following: "Building design carried out by the Division of Capital Construction of the Institute. Division Chief Ya. I. Lapkovskiĭ. Chief Engineer A. F. Zhigulev. Electrical Engineer P. Ya. Glazunov. Architect Ya. D. Glikman. Scientific Representative L. M. Nemenov. Design Engineer B. I. Ozhegov. . . ."[3] (Fig. 2).

It must be admitted that this message to the future was quite rapidly forgotten. However, the text nevertheless turned out to be known in a surprising way. In the 1950s a new building was put up at the Physico-Technical Institute. For this purpose, part of the foundation of the cyclotron building was destroyed and removed from the Institute. Later, in November 1964, the area in which the debris was dumped was being prepared for construction of new apartment complexes. The bulldozer operator leveling the ground saw an iron tube fall out of some brickwork under the impact of the blade of his machine. Opening the tube, he found a tablet and 10 small coins placed in the container for company. These artifacts were sent to the Physico-Technical Institute and now are preserved in the cyclotron laboratory.

Starting in the Fall of 1940, I. V. Kurchatov, leaving the Radium Institute, where he was at that time head of the Physics Division, concentrated his efforts entirely on work on the Physico-Technical Institute cyclotron. At this time it was comparatively close to completion. In the Spring of 1941 the building housing the cyclotron was practically complete, as were the high-frequency oscillator, prepared at the Leningrad Physics Institute and with a power of 20 kW, the electromagnet from the firm Élektrosila, made with special Armco iron from the Bol'shevik factory,[4] and the motor generator for supplying the electromagnet with a power of

FIG. 2. Left to right: A. F. Ioffe, A. I. Alikhanov, and I. V. Kurchatov, Leningrad, 1938.

100 kW, which was a power-plant discard restored by the efforts of I. V. Kurchatov. On June 1, 1941 the cyclotron vacuum chamber successfully passed its tests, and assembly of all the cyclotron equipment was carried out.

On June 20, 1941 a correspondent from the Central Division of Pravda appeared at the cyclotron. There is reason to suppose that this was the well known journalist B. Agapov. On June 22 his article appeared in the newspaper under the heading: "Leningrad, June 21, Pravda correspondent. In Lesnoĭ on the grounds of the Physico-Technical Institute of the Academy of Sciences of the USSR recently a two-story building was constructed, similar to a planetarium. The elongated main part of the structure is crowned with a cupola. This is the first high-power cyclotron laboratory in the Soviet Union, for disintegration of the atomic nucleus.[5)]

"At the present time electrical apparatus is being installed in the new building, and equipment is being assembled. In the machine room there is already a 120-kilowatt generator. Parts of a second generator are being lowered through an opening in the upper part of the concrete enclosure. In the next room a large distribution panel is being assembled.

"The circular room constructed of iron and glass is very impressive. It rests on eight massive steel columns. In the near future an electromagnet weighing 75 metric tons and about four meters high will be installed here. The diameter of the magnet poles will be 1200 mm.

"Underneath the cupola of the room there are two heavy girders to support a crane. Rails will rest on these girders and a crane carriage with capacity of 25 metric tonnes will move along them. In a deep bay the high-frequency oscillator has been assembled." (Ref. 3, pp. 28–29).

In a discussion with the correspondent, L. M. Nemenov stated that all the cyclotron equipment was ready except for the electromagnet.

Startup of the cyclotron was planned for the very beginning of 1942. The war abruptly cut off the cyclotron work. I. V. Kurchatov and his colleagues went to work on study of the demagnetization of ships being carried on at the Physico-Technical Institute under the guidance of A. P. Aleksandrov. On evacuation of the Physico-Technical Institute to Kazan', the brass vacuum chamber and also the scarce sheets of copper and brass were carefully hidden; all work on the cyclotron was stopped.

As is well known, at the end of 1942 organization of work on the uranium problem began, headed by I. V. Kurchatov. In January 1943 the blockade of Leningrad was broken; on February 6 a 33-kilometer railroad line, laid down in 18 days, began to operate, connecting Leningrad with the rest of the world. In March 1943 I. V. Kurchatov proposed the construction of a second cyclotron lab, having in mind primarily the production of plutonium for research purposes.[11] In order to accelerate work on the cyclotron it was decided to use the parts of the Physico-Technical Institute cyclotron. Nemenov and Glazunov were promptly dispatched to Leningrad and at the beginning of May were able to send to Moscow in two railroad cars the high-frequency generator and rectifier for the cyclotron (mounted in three large cabinets), the brass and copper sheets, the Pyrex insulators for the dees, and some other equipment (in particular, vacuum pumps). The electromagnet was found undamaged at the Élektrosila plant, which at that time was only three miles from the front line, but it was impossible to transport it to Moscow. There is no doubt that these important parts of the Physico-Technical Institute cyclotron played a major role in the rapid startup of the first Moscow cyclotron, which already at the end of 1944 gave a beam of deuterons with energy 4.2 MeV.

The cyclotron building at the Physico-Technical Institute was used during the war years both for industrial purposes and as a military barracks.

I. V. Kurchatov and Alikhanov presented to the government a petition regarding the necessity of restoring the Physico-Technical Institute cyclotron. The corresponding decision was adopted in January 1945. A major role in its startup was played by the transfer from the Radium Institute to the Physico-Technical Institute of D. G. Alkhazov, who in September 1945 was named to head the cyclotron laboratory. An active part in restoring the cyclotron was taken by A. P. Grinberg, V. P. Dzhelepov, N. V. Fedorenko, and others. The problems facing the Physico-Technical Institute staff reduced to installation of the electromagnet (which during the entire war had sat at the Élektrosila plant) and its testing (which was accomplished in May 1945), to the completion and tuneup of the high-frequency oscillator (in the winter of 1945–1946), to preparation of the cyclotron chamber and testing of its vacuum properties (the spring of 1946), to construction of the control panel, and finally to the consistent operation of all parts and the startup of the cyclotron.

Immediately after the end of the war, in June 1945, the USSR Academy of Sciences celebrated its jubilee. Numerous guests from abroad were invited to the jubilee session. At the end of June all participants at the session, including the foreigners, traveled from Moscow to Leningrad. On June 27 Alikhanov demonstrated to the visiting physicists the completed cyclotron building and the apparatus assembled in it. Among the guests at the Physico-Technical Institute were the Joliot-Curies, P. Auger, F. Perrin, Max Born, and many others.

A year later on July 18, 1946 a physical deuteron beam was obtained, and after another month on August 21 a working beam. By November its intensity was 250 μA at an accelerated deuteron energy of 6 MeV.

The Physico-Technical Institute cyclotron had begun operation!

The first studies carried out in the cyclotron involved neutron irradiation of a number of materials with the purpose of producing radioactive isotopes. Work on the bombardment of uranium and the production of plutonium had special significance. Here it should be mentioned that a microscopic quantity of plutonium (about 10^{12} atoms) was obtained by B. V. Kurchatov in October 1944 by bombarding uranium with neutrons from an ordinary radium-beryllium source. In the next experiments of B. V. Kurchatov the neutron source was the cyclotron at lab No. 2.[11] By this means several hundredths of a microgram of plutonium were obtained (and with the startup of the physical reactor at lab No. 2 the amount of plutonium turned out to be so great that I. V. Kurchatov could see a piece of plutonium of weight 10 micrograms in a microscope (Ref. 12, pp. 37–38)). Having these amounts of plutonium available, B. V. Kurchatov was able to develop a laboratory procedure for its separation. The next problem was the important one of developing in-

dustrial technology for extraction of plutonium, which was assigned to V. G. Khlopin and his colleagues (Ref. 13a, page 11). The Physico-Technical Institute cyclotron played a large part in solving this problem. It provided a neutron beam about thirty times more intense than the lab No. 2 cyclotron with which B. V. Kurchatov was working. The time of bombardment of the uranium target in 1946–1947, according to the recollections of D. G. Alkhazov (as recorded by A. P. Grinberg), was about 2000 hours. In this way, before the beginning of the operation of industrial reactors, Khlopin had available samples of plutonium[6)] which permitted important steps to be taken in development of the industrial technology of plutonium (see Ref. 14, page 554, and Ref. 15).

Another series of studies at the Physico-Technical Institute involved determinations of the cross sections for neutron absorption in various materials—I. V. Kurchatov gave special attention to these studies. They were carried on by the Physico-Technical Institute staff in collaboration with Kurchatov's Moscow colleagues M. I. Pevzner and M. K. Romanovskiĭ. A major role in the successful accomplishment of this group of studies (which lasted with interruptions from 1949 to the beginning of 1953) was played by the neutron chopper—at first a two-channel device developed by D. S. Andreev and I. L. Al'pert in 1949, and then a ten-channel device developed by the same persons in 1951.[7)]

An important achievement of the cyclotron laboratory at the Physico-Technical Institute was the use of the cyclotron for operation in a variable-frequency (synchrocyclotron) mode. Theoretical calculations for this mode had been made by D. G. Alkhazov and D. M. Kaminker by the end of 1946. The Physico-Technical Institute cyclotron began operation in the synchrocyclotron mode in April 1947 and was the first accelerator of that type in the USSR. In 1948 the maximum energy of the deuterons in the synchrocyclotron was 22 MeV, and for protons—24 MeV at beam currents of the order of 0.1–0.2 μA (D. M. Kaminker and I. L. Al'pert).

2. STUDY OF COULOMB EXCITATION OF NUCLEAR LEVELS

In 1954 as the result of the successful development of a source of multiply charged ions, an external beam of accelerated ions of $^{14}N^{3+}$ was obtained in the Physico-Technical Institute cyclotron with $E = 15$ MeV and intensity at the target about 10^{-7} A. This made it possible to begin a long series of studies of Coulomb excitation of nuclear levels—the process of excitation of nuclei as a result of their interaction with the electromagnetic field of the incident particle. Studies of Coulomb excitation, like the subsequent studies of the structure of high-spin and highly excited states of nuclei, were carried out under the scientific guidance of one of the present authors (I. Kh. L.). The possibility of use of heavy ions for study of Coulomb excitation was pointed out to the cyclotron laboratory staff for the first time by G. N. Flerov.

The theory of Coulomb excitation in the first approximation of quantum-mechanical perturbation theory was developed at the Physico-Technical Institute by K. A. Ter-Martirosyan[17] on the basis of a classical treatment of the incident-particle trajectory. Coulomb excitation is distinguished in two ways from other nuclear reactions. The first is that the well known nature of electromagnetic forces permits a quantitative expression to be obtained for the excitation cross section. It turned out to be proportional to the reduced probability $B(\mathrm{EL})$ of an electric transition from the ground state to the excited state, and this permitted use of measured cross sections to obtain information on $B(\mathrm{EL})$ values. The latter are very sensitive to the form of the wave functions and therefore are important for judging the applicability of various theoretical models of nuclear structure. The second feature of Coulomb excitation reactions is their selectivity. Coulomb excitation cross sections drop sharply with increase of the excitation energy of the level ΔE. The cross sections for excitation of magnetic transitions are very small and have not been observed experimentally, and of the electric transitions mainly quadrupole transitions ($L = 2$) are excited. The cross section for octupole transitions ($L = 3$) is substantially smaller. Since the collective states of a nucleus are characterized by comparatively small values of ΔE and large values of $B(\mathrm{EL})$, the possibilities of Coulomb excitation for discovery and detailed study of low-lying collective states of nuclei are obvious.

Preliminary estimates by Grinberg and Lemberg[18] showed the basic advantages of the use of accelerated multiply charged heavy ions for investigation of Coulomb excitation—the increase of the excitation cross section and the substantial decrease of the intensity of the background characteristic x rays. Already in the first experiments of Alkhazov and Andreev[19] using heavy ions, levels of a number of elements were excited. These were the first studies of Coulomb excitation with heavy ions, and particles accelerated in a cyclotron were used for this purpose here for the first time. The main result of these experiments was that it was shown in a number of examples that the competing contribution of nuclear reactions is significantly weaker with use of heavy ions than with use of lighter particles.

The setting up and development of studies on Coulomb excitation required the solution of a number of methodological and technical problems.

In the Physico-Technical Institute cyclotron, which was initially intended for acceleration of light ions and was designed to produce particles with a fixed energy, as the result of a number of improvements and innovations in the period 1955–1965, extracted beams were obtained of the ^{4}He, ^{10}B, ^{11}B, ^{12}C, ^{14}N, ^{16}O, ^{20}Ne, ^{21}Ne, ^{22}Ne, and ^{40}Ar ions with energy from 4.5 to 66 MeV and intensity from $5\cdot10^{-11}$ to $5\cdot10^{-7}$ A, depending on the type of ion and its energy.

A scintillation spectrometer using NaI(Tl) was built and then constantly improved. In 1955 the laboratory staff built a multichannel pulse-height analyzer. In order to focus the beam of extracted ions, in this same year quadrupole lenses were used—the first in the USSR.[20]

A technique was developed for determination of reduced transition probabilities, based on measurement of the absolute yields of γ rays emitted in a Coulomb excitation reaction, and also a technique for accurate determination of the efficiency for detection by the NaI(Tl) crystal of γ rays of various energies.

The competition of processes occurring through production of a compound nucleus is especially large in the case of light nuclei. For this reason before the beginning of work with use of heavy ions, Coulomb excitation of levels of nuclei with $A \leqslant 45$ was observed in only two cases.

At the Physico-Technical Institute, Coulomb excitation was studied of another 12 light nuclei, including levels of such light nuclei as ^{7}Li and ^{10}B. The use of heavy ions

permitted observation for the first time of the Coulomb excitation of nuclear levels of the bombarding particles. The Coulomb excitation of the 2_1^+ states of ^{18}O, ^{20}Ne, ^{22}Ne, and ^{40}Ar and of the $(5/2)_1^+$ state of ^{21}Ne was investigated in this way.

Studies of the Coulomb excitation of ^{25}Mg (Ref. 21) and ^{27}Al (Ref. 22) provided important confirmation of the suggestion[23] that there is a new region of nuclei with static deformation in the vicinity of $A \approx 25$. It turned out that the $B(E2)$ probabilities for transitions from the ground states to the levels 1.61 MeV of ^{25}Mg and 2.21 MeV of ^{27}Al are substantially greater than the $B(E2)$ values for transitions to the lower-lying states of these nuclei. If the 1.61- and 2.21-MeV levels are rotational states of a deformed nucleus, then, proceeding from the $B(E2)$ values, one can determine the value of the intrinsic quadrupole moment Q_0. The values of Q_0 determined in this way for ^{25}Mg and ^{27}Al are in agreement with the values obtained independently from measurements of the hyperfine structure of optical spectra. Finally, the values of Q_0 determined from our data for $B(E2)_{0_1^+ \to 2_1^+}$ in the case of ^{20}Ne, ^{22}Ne, ^{24}Mg, ^{26}Mg, and ^{28}Si on the assumption that they are rotational also were in good agreement with theoretical estimates obtained on the assumption of a static deformation of these nuclei.

An important contribution of the Physico-Technical Institute Cyclotron Laboratory to the understanding of the structure of low-lying excited states of nuclei was the systematic study of the Coulomb excitation of the first excited states of spherical even-even nuclei. Studies of Coulomb excitation by means of protons and α particles significantly extended the information on the $B(E2)_{0_1^+ \to 2_1^+}$ values and the lifetimes τ of the 2_1^+ states associated with them. The use of heavy ions permitted the investigations to be extended to very complicated cases such as Coulomb excitation of high-energy levels of nuclei closed in one shell. In some cases, for example, in the presence of intense background radiation emitted in reactions of heavy ions with impurities of light elements, Coulomb excitation was studied by detecting coincidences of back scattered heavy ions, i.e., ions scattered into the backward hemisphere at angles near 180°, and γ rays emitted as the result of Coulomb excitation. Altogether values of $B(E2)_{0_1^+ \to 2_1^+}$ were determined for more than 60 isotopes; for 15 of them, these measurements were made by means of γ-heavy ion coincidences. In a number of cases the energies of the 2_1^+ states were determined for the first time.

It was found that the experimental values of $B(E2)_{0_1^+ \to 2_1^+}$ in the case of spherical nuclei are 1–2 orders of magnitude greater than the single-particle estimates. This indicates the collective nature of the levels. On the other hand, it turned out that the values of $B(E2)_{0_1^+ \to 2_1^+}$ and of the level energy $\Delta E_{2_1^+}$ depend strongly on the degree of filling of the shells.

S. T. Belyaev[24] used a microscopic approach to discuss collective excitations of spherical even-even nuclei with inclusion of pairing and with use of a Bogolyubov transformation to obtain expressions for $B(E2)_{0_1^+ \to 2_1^+}$ and $\Delta E_{2_1^+}$. Detailed calculations in the framework of this approach carried out by the staff at the Physico-Technical Institute[25] showed that the theory satisfactorily describes the experimental $B(E2)_{0_1^+ \to 2_1^+}$ values and their behavior with change of the number of neutrons. Birbrair *et al.*[26] took into account, together with the particle-hole interaction, the particle-particle interaction. This permitted a substantial improvement also in the description of the $\Delta E_{2_1^+}$ values.

The cross sections for excitation of the higher levels of even-even nuclei are several orders of magnitude smaller than for the 2_1^+ levels. Therefore a study of the second levels of spherical nuclei—0_2^+, 2_2^+, and 4_1^+ (sometimes called triplets) was carried out by measurement of γ coincidences[27] and coincidences of γ rays and heavy ions.[28] The use of heavy ions permitted cascade double excitation of levels, which occurs in the second order of perturbation theory, as a result of which in a number of cases levels of even-even nuclei with quantum numbers 4_1^+ were excited. Previously it had not been possible to excite these levels by means of protons or α particles.

In these studies information was obtained on the values of $B(E2)_{2_2^+ \to 0_1^+}$, $B(E2)_{2_2^+ \to 2_1^+}$, and $B(M1)_{2_2^+ \to 2_1^+}$ for the isotopes of Ge, Se, Mo, Pd, and Te, and also on the $B(E2)_{4_1^+ \to 2_1^+}$ values for the isotopes of Pd and Pt. In Ref. 29 double Coulomb excitation of the 0_2^+ level of ^{70}Ge was studied. The value of $B(E2)_{0_1^+ \to 2_1^+}$ exceeds $B(E2)_{0_1^+ \to 2_1^+}$; nevertheless the 0_2^+ state is located in the immediate vicinity of the 2_1^+ state of ^{70}Ge and hardly can be considered as two-phonon.

The main consequence of comparison of the new information on the second levels of the investigated even-even nuclei with the conclusions of the theory was that models differing considerably in their initial assumptions, namely the nonaxial-rotator model of Davydov and Filippov and the Belyaev-Zelevinskiĭ model which takes into account the anharmonic nature of quadrupole vibrations, describe the probabilities of transitions from the second levels and between them about equally well.

Also related to this series of studies is the investigation[30] of the Coulomb excitation of 2_1^+ vibrational states in the deformed nuclei ^{182}W, ^{184}W, and ^{186}W, in which values of $B(E2)_{0_1^+ \to 2_2^+}$ were determined for the first time for transitions to γ-vibrational states in deformed nuclei.

The conditions for observation of multiple excitation of levels are particularly favorable in deformed nuclei. In Ref. 31 by investigating coincidences of γ rays with back-scattered nitrogen ions the excitation of ^{154}Sm and ^{160}Gd states with spins up to 6^+ inclusive was studied.

The results of the investigation of Coulomb excitation of octupole electric transitions to 3^- levels in the even-even isotopes of tin are of interest. The values of $B(E3)$ turn out to be about 30 times greater than the single-particle estimates. This result indicates the collective nature of octupole transitions in the tin isotope. At the same time it refutes the highly exaggerated estimates of the enhancement of these transitions published in Ref. 32, in which excitation of E3 transitions was investigated.

The Coulomb excitation of nuclei with odd A was systematically studied.[33,34] The excitation of about 150 levels in 60 nuclei with odd A was investigated. Many previously unknown levels were observed, and this permitted improvement of the decay schemes of these nuclei. High sensitivity of the measurements was achieved; in particular, $B(E2)$ values were measured which were two orders of magnitude smaller

than the single-particle estimate. In many cases the study of nuclei with odd A included study of the angular distributions of γ rays, of correlations of the directions of the γ rays and of the scattered heavy ions, and also of the correlation of the direction and polarization of the γ rays. In these studies[35,36] important additional spectroscopic information was obtained on the spins of states and on the amplitude and sign of the quantity δ characterizing the ratio of the amplitudes of the intensities of transitions with different multipolarities. Data on δ^2 together with information on $B(\mathrm{E2})$ permit use of Coulomb excitation to obtain a systematics of the reduced probabilities of magnetic dipole transitions, although direct excitation of Ml transitions is not observed experimentally. The study of Coulomb excitation of nuclei with odd A was especially stimulated by the appearance in the laboratory of Ge(Li) γ-ray detectors, which were distinguished by their high energy resolution. The systematics of the $B(\mathrm{M1})$ values was substantially enriched by a series of studies[37,38] in which in addition to $B(\mathrm{E2})$ values and consequently also values of $\tau(\mathrm{E2})$ obtained in studies of the Coulomb excitation of levels, the total lifetime τ of the excited state was determined in these same experiments and, using the relation $1/\tau = (1/\tau(\mathrm{E2})) + (1/\tau(\mathrm{M1}))$, it was possible to find $\tau(\mathrm{M1})$ and then $B(\mathrm{M1})$. The value of τ in these experiments was determined by using the weakening of the Doppler shift of the γ-ray energy on slowing down of the recoil nucleus in matter (more detail on this will be given in the next section) by analysis of the shape of the Doppler-shifted γ line recorded by a Ge(Li) detector. The results of studies of nuclei with odd A were compared in detail with the conclusions of various modifications of models of coupling of the odd particle and the excited states of the core. In the case of a number of nuclei it was shown that this model can lay claim only to a qualitative explanation of the structure of low-lying excited states of odd nuclei. The best agreement existed in comparison of the experimental data in the case of nuclei with three nucleons or holes above a closed shell or subshell (^{69}Ga, ^{71}Ge, ^{127}I)[39] with the conclusions of the Paar-Alaga model, which takes into account, together with the coupling of the three valence particles or holes with collective excitations of the core, the interaction of these particles with each other.

The Coulomb excitation studies carried out using the Physico-Technical Institute cyclotron made an important contribution to the understanding of the nature of low-lying excited states of nuclei. For the series of studies of Coulomb excitation of nuclei published in 1956–1966, the USSR State Prize for 1968 in the field of science and technology was given to D. G. Alkhazov, I. Kh. Lemberg, D. S. Andreev, K. I. Erokhina, K. A. Ter-Martirosyan, and Yu. P. Gangrskiĭ.

3. STUDIES OF HIGH-SPIN AND HIGHLY EXCITED STATES OF NUCLEI

Coulomb excitation turned out to be a very useful tool for identification of low-lying collective states of nuclei and for learning their properties. However, the entire diversity of properties of collective states, which appears in the very individual structure of states of transition nuclei and their interaction with quasiparticle excitations, can be understood only on the basis of study of bands of high-spin and highly excited states. In this respect considerable interest was presented by the previously essentially unstudied region of nuclei with $A \leqslant 100$.

In the meantime just the previously mentioned selectivity of the Coulomb excitation process achieved under conditions of validity of the first order of perturbation theory did not permit using this process to study high-spin and highly excited states. It is true that for this purpose multiple Coulomb excitation can be used, but the practical use of this process requires special accelerators in which it is possible to accelerate ions with mass of 50 amu or more to energy 10 MeV or more per nucleon. Therefore the new scientific direction of the Physico-Technical Institute Cyclotron Laboratory, extending its activity to the region of study of the structure of excited states of nuclei, was investigation of reactions induced by α particles and heavy ions, occurring through the compound nucleus.

Heavy ions carry a large angular momentum and excitation energy into the compound nucleus produced. This leads to preferential population of highly excited and high-spin states which previously were not realized in reactions induced by protons or in study of α decay. The large angular momentum given to the nucleus turns out to be to a significant degree aligned, and therefore the γ radiation is an isotropic and study of its angular distribution permits information to be extracted on the spins of the levels and on the multipolarity of the electromagnetic transitions. Finally, an important feature of reactions induced by heavy ions is the large momentum acquired by the final product nuclei of the reaction (up to 1.6% of the velocity of light in reactions induced by heavy ions and up to 0.5% in reactions induced by α particles accelerated in the Physico-Technical Institute cyclotron), which permits measurement of τ by methods utilizing the Doppler shift of the γ-ray energy as a function of the velocity of the nucleus.

The new direction of research initiated a number of important technical developments which are of independent interest.

In joint work with the staff of the Institute of Electro-Physical Apparatus[40] on shaping of the radial falloff of the magnetic field, correction of its low harmonics to a level of 1 oersted, modernization of the "central optics" of the cyclotron to obtain a centered beam, and focusing of the external beam by a magnetic channel, the intensity of the extracted beams of heavy ions was increased substantially (by a factor of 10–30), and the energy inhomogeneity of the beam was reduced by a factor of 2–5. As a result of radical redesign of the high-voltage oscillator,[41] carried out by laboratory personnel, the range of its frequencies was extended, and this permitted an increase of the maximum energy of accelerated α particles from 17 to 28 MeV. In this way, in addition to reactions induced by heavy ions, the possibility was provided of studying $(\alpha,2\mathrm{n})$ reactions for nuclei with $A < 100$, and in some cases $(\alpha,3\mathrm{n})$ reactions.

Considerable attention was given to mastery and further development of the new and very productive method of measurement of the lifetimes of excited states of nuclei by means of Doppler effects.

There are two main types of measurement of τ on the basis of the Doppler effect. For measurement of τ values in the region 10^{-12}–10^{-9} sec one uses methods based on application of a special device—the plunger chamber. Here the measure of time is the time necessary for traversal in vacuum of a gap D between the target and the plunger.

In Fig. 3 we have shown a schematic diagram of a new

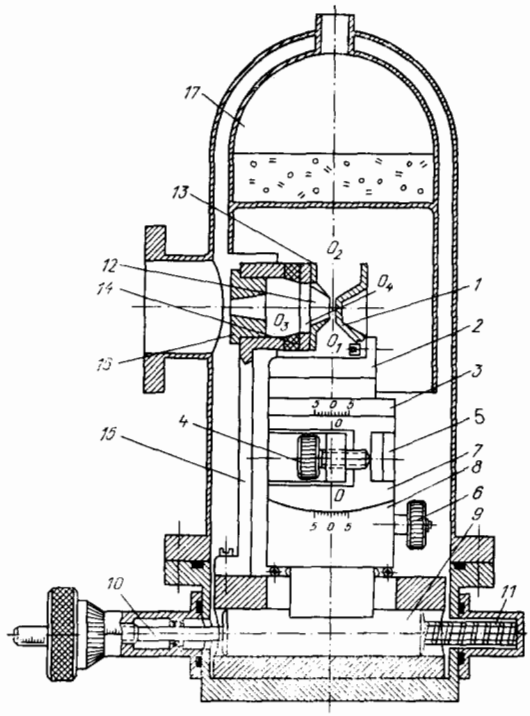

FIG. 3. Schematic construction of plunger chamber made at the Physico-Technical Institute. 1—plunger, 2—insulator, 3—upper table of goniometer, 4—goniometer adjusting screw (axis O_1O_2), 5—rotation arm, 6—goniometer adjusting screw (axis O_3O_4), 7—lower table of goniometer, 8—base of goniometer, 9—horizontal travel platform, 10—micrometer screw, 11—return spring, 12—target, 13—target holder, 14 and 15—insulators, 16—collimator, 17—liquid nitrogen trap.

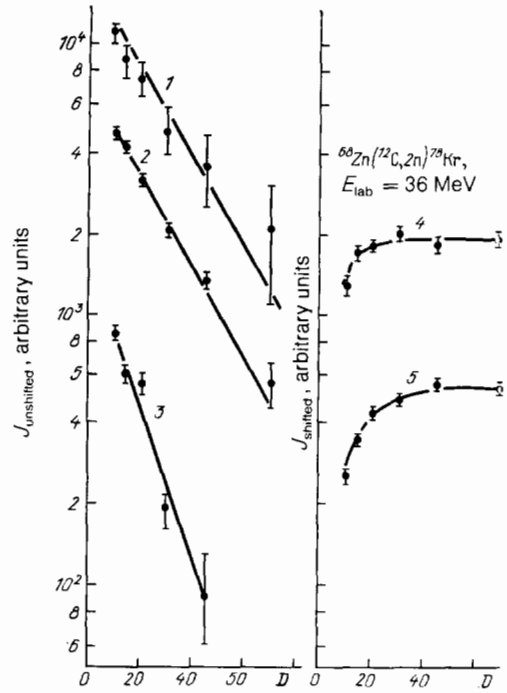

FIG. 4. Experimental and theoretical dependences of the intensities of certain shifted and unshifted γ lines in ^{78}Kr as a function of the distance D between the target and the plunger (in microns). 1—3219.3 keV (E_γ = 920.5 keV), τ = 7.4 psec; 2—1564.0 keV (E_γ = 1109.5 keV), τ = 7.3 psec; 3—1147.3 keV (E_γ = 1147.3 keV), τ = 4.5 psec; 4—3917.7 keV (E_γ = 698.4 keV), τ = 1.2 psec; 5—3287.6 keV (E_γ = 538.7 keV), τ = 2.8 psec.

version of plunger chamber designed and constructed at the Physico-Technical Institute Cyclotron Laboratory.[42] The thin target and the plunger surface were made parallel by means of a goniometer. The accuracy of angle adjustment was 4″ of arc. The gap D was set by means of a micrometer screw with an accuracy of 1 μm. Two other examples of this device made at the Physico-Technical Institute are being used successfully at the Nuclear Research Center of the East German Academy of Sciences and at the Nuclear Physics Institute of the Ukrainian Academy of Sciences. The energy of the γ rays recorded by a Ge(Li) detector depends on whether the γ ray was emitted during motion of the nucleus with velocity v or after slowing down of the nucleus in the plunger. Therefore each transition in the γ-ray spectrum gives two lines—shifted and unshifted. Determination of the ratio of their intensities as a function of D, on comparison with a calculated value, permits determination of the value of τ. In Fig. 4 we have shown experimental and theoretical dependences of the intensities of the unshifted and shifted lines as a function of D for ^{78}Kr.

For measurements of τ in the range 10^{-14}–10^{-12} sec one can use the method of weakening of the Doppler shift of the energy of the γ rays as the result of slowing down of the nuclei in matter. Here the measure of time is the characteristic time of slowing down of the nuclei in matter, which can be calculated using the Lindhard-Scharff-Schiott theoretical expression for ionization loss.

An important contribution to increasing the accuracy of Doppler-shift-weakening methods was the original method developed in the laboratory for determining the correction coefficients which improve the agreement of the Lindhard-Scharff-Schiott equation with experiment.[43,44] The method is based on measurement of the Doppler-shift-weakening effect for the case of a semi-thick target and γ radiation emitted from a state with a sufficiently short lifetime. Usually the value of τ is determined by measuring the attenuation coefficient F of the Doppler shift of the γ-ray energy, i.e., the ratio of the observed shift to the maximum possible value, and comparing it with the theoretically calculated dependence $F(\tau)$. The deficiencies of this method are the impossibility of bringing out the systematic errors and the impossibility of determining τ if the Doppler lines partially overlap.

A significant step forward was the technique of determining τ on the basis of a calculation of the shape of the Doppler-broadened γ line. The corresponding programs[5] include an exact calculation of the kinematic spread of the final nuclei carried out on the basis of the statistical theory of nuclear reactions. Energy loss in the target and substrate (or plunger material) are taken into account, and also cascade feeding from higher discrete states, side feeding due to population of the investigated states by cascade quasicontinuous γ radiation, and also the finite size of the γ-ray detector. A characteristic feature of the calculations is extensive use of the Monte Carlo method, which provides the possibility of carrying out specific calculations with inclusion of a large number of factors (the various angles of γ-ray detection, the spread of the target thickness, and so forth). An important feature of these calculations is the use of an original procedure for modeling the exact distribution function of the final nuclei over the scattering angles as a result of their multiple scattering, which greatly economizes the calculation time. This gave the possibility of use for purposes of measurement

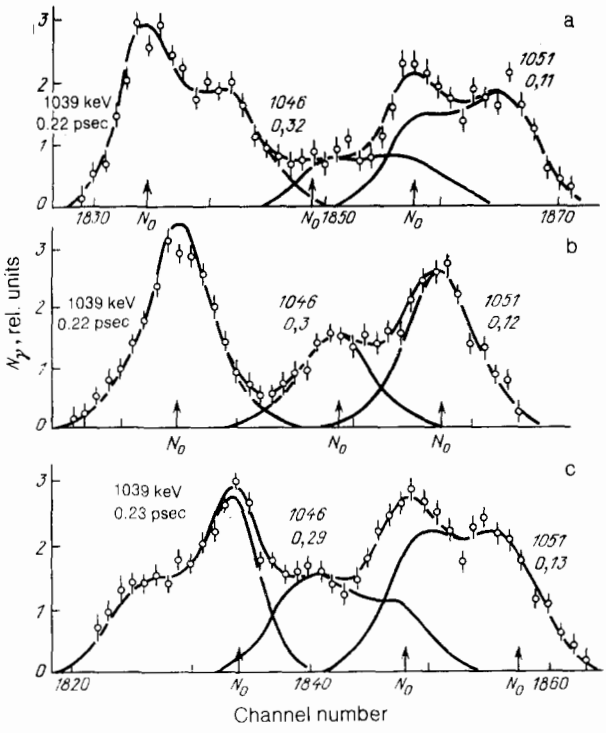

FIG. 5. Example of analysis of a complicated group of three Doppler γ lines, two of which (1039 and 1051 keV) belong to ^{78}Kr. The reaction is ^{58}Ge(α, 2n)^{78}Kr. We have shown the uniqueness of determination of τ with use of different observation angles θ. (a)—25°. (b)—90°. (c)—150°.

the γ-ray spectra recorded at $\theta = 90°$ by means of a Ge(Li) detector with high resolution (1.9 keV at $E_\gamma = 1.33$ MeV).

An important feature of the calculations is the possibility of carrying them out by means of two overlapping lines, one of which (or both of them) is distorted by the Doppler effect. In Fig. 5 we have shown an example of determination of τ on the basis of the shape of the peak for the case of overlapping lines. The experience of the laboratory in development of Doppler methods of measurement of the lifetime of excited states of nuclei is reported in more detail in several reviews.[47,48]

For understanding the structure of the excited states of a nucleus it is important to know the decay scheme, the energy-level diagram, the quantum numbers of the levels, the ratio of the relative intensities of the transitions, and the values of δ. This information is important from the point of view of comparison with the conclusions of theoretical approaches. It is necessary also for interpretation of the measurements of τ and of the γ-ray angular distribution.

In order to establish the decay scheme we constructed a measuring complex working on-line with the cyclotron and with laboratory computer, intended for recording and subsequent analysis of multidimensional coincidences of γ rays emitted in de-excitation of the excited states of the final product-nuclei of the reaction.[49] By means of this complex we established the decay schemes of the nuclei ^{76}Se, ^{78}Se, ^{78}Kr, ^{84}Kr, and ^{85}Kr.

It is well known that measurements of the angular distribution of γ rays do not permit the unique establishment of the level spin and the value of δ for the half-life being studied. In addition measurements of the angular distribution do not give the parity of the state. Combined study of the angular distribution and the excitation function, i.e., of the dependence of the γ-ray yield on the energy of the bombarding particles, permitted removal of the ambiguity in establishment of the spin values.

In a number of cases comparison of the experimental τ values measured in the laboratory with data of the systematics of partial lifetimes of electromagnetic transitions permitted definite conclusions to be drawn regarding the parity of states and removal of the ambiguity in the δ values present in angular distribution measurements.

From the point of view of establishing the quantum numbers of states and the multipolarities of transitions a very useful instrument turned out to be the compact light conversion-electron spectrometer, designed and constructed jointly with the staff of the Institute of Metals of the Ural Scientific Center of the USSR Academy of Sciences, equipped with a magnetic selector of the orange-sector type placed in the immediate vicinity of the target.[50] By this means, in particular, the negative parity of the ^{84}Kr band based on the 2700-keV state was established.

In the course of experiments on reactions induced by heavy ions and α particles new data were obtained on the energies, lifetimes, and quantum numbers of a large number of high-spin and highly excited states of nuclei and on the multipolarities of transitions between them. The systematics of B(E2) and B(M1) values were greatly extended. We should especially note the scaling nature of the τ measurements, characterized by the fact that for most levels, in addition to their energy, their lifetimes were determined. The structure of high-spin and highly excited states was systematically studied for the odd nuclei ^{67}Zn (Ref. 51), ^{69}Ge (Ref. 52), ^{69}As, ^{71}As, ^{83}Kr (Ref. 53), ^{85}Kr (Ref. 54), and ^{83}Rb (Ref. 55) and for the odd-odd nuclei ^{54}Mn (Ref. 56) and ^{76}Br and the even-even nuclei ^{60}Ni (Ref. 57), ^{64}Zn, ^{66}Zn, ^{68}Ge (Ref. 58), ^{70}Ge (Ref. 59), ^{72}Se, ^{74}Se (Ref. 60), ^{76}Se (Ref. 61), ^{78}Se, ^{78}Kr (Ref. 62), ^{80}Kr (Ref. 63), and ^{84}Kr (Ref. 54). Some of the nuclei listed were studied jointly with the Nuclear Research Center in East Germany.

And what were the physical consequences of the results? In all the even-even nuclei investigated, several bands each of states of positive and negative parity with spins up to 14 and excitation energies up to 5–6 MeV were observed. In a number of cases the bands have a clearly expressed quasi-rotational nature. Understanding the nature of these bands encountered certain difficulties.

Microscopic calculations of the structure of the excited states of a nucleus encounter the problems present in many-body problems and cannot claim to provide a detailed description of the properties of nuclei. Therefore a large role at the present time is given to phenomenological models, in particular also because the ideas of microscopic theory are used to justify them: thus a phenomenological approach by no means reduces to a search for expressions which fit the data. The Bohr-Mottelson phenomenological model is most highly developed, but its mathematical apparatus is quite complicated and systematic calculations of the structure of excited states of nuclei have not been carried out in the framework of this model.

In recent years definite progress in understanding collective states has been achieved in the framework of the interacting boson model (IBM), which was first formulated in Refs. 64 and 65. This model and the Bohr-Mottelson collec-

tive model have in common the assumption that the formation of low-lying states of even-even nuclei is determined mainly by the low-frequency quadrupole mode. The appearance of quadrupole quanta of excitation is described in the IBM by means of boson Hamiltonians which, in addition to a term corresponding to the energy of the free bosons, contain a number of terms expressing the interaction between them. The microscopic prototype of the bosons of the IBM consists of pairing fermion operators. It is just the inclusion of the interaction of the bosons which has been responsible for the success of the model, making it possible by varying the parameters to describe various characteristic situations in a nucleus which were previously discussed independently, and on this basis to explain in a unified way the evolution of the properties of nuclei with change of the number of protons or neutrons.

In a combined study the staffs of the Physico-Technical Institute Cyclotron Laboratory and the A. A. Zhdanov Leningrad State University developed an algorithm and a program for calculation of the structure of excited states of nuclei in the framework of the IBM, and at the present time they have carried out calculations of the structure of collective states of the isotopes of a number of even-even nuclei (the isotopes of Zn, Ge, Se, Kr, and Sr).[66,67] These calculations make use of a variant of the IBM in which no distinctions are made between neutron bosons and proton bosons. The Hamiltonian contains six parameters which are found by means of an optimization procedure. For calculation of the values of $B(E2)$ an additional parameter e^* called the effective charge is used.

In Fig. 6 the experimental values of the excitation energies of states of the isotopes of Kr are compared with theoretical values[66] obtained in the framework of the IBM.

The greatest discrepancies exist for 3_1^+ and 5_1^+ states. The discrepancies for states in the excitation region 3–4 MeV are due to the interaction of collective and two-quasiparticle states. On the whole the model satisfactorily describes the energies of collective states of the Kr isotopes. The same situation exists also for the isotopes of Zn, Ge, and Se. In particular, the IBM reproduces the energy of the anomalously low 0_2^+ states of Kr and Se. In addition to the energies of the levels, the IBM satisfactorily reproduces the experimental values of $B(E2)$.

Thus, an important result of the work carried out has been that the new information on the collective high-spin states of nuclei with $A < 100$, their energies, the probabilities of transitions inside bands and between them, and their evolution with change of the number of nucleons has received in the first approximation an explanation on the basis of the recently developed phenomenological theory of the interacting boson model.

At the present time it has been found that the conclusions of the IBM and of the Bohr-Mottelson collective model agree to a considerable extent, and a number of studies have been devoted to establishing a transition from one to the other. However, the comparative simplicity of calculations in the IBM has made it possible to carry them out for many nuclei over a broad region of A and for the first time to demonstrate the possibilities of a phenomenological approach to a description of the collective states of spherical and transition nuclei.

At the same time the calculations in the framework of the IBM have permitted observation of a series of examples of discrepancy with experimental results, part of which are due to the initial limitations of the model. The problem of the difficulties of the model is set forth in Refs. 68 and 69. Reference 68 discusses means of taking into account some of the limitations of the IBM and describes the content of corresponding studies carried out at the Physico-Technical Institute.

An approach different from the IBM for description of the anharmonic nature of quadrupole collective motion in nuclei has been under development in recent years in Refs. 69, 70, and 71. Without doubt, the large amount of information on the structure of excited states with $A < 100$ obtained at the Physico-Technical Institute will turn out to be useful for comparison of the two approaches.

New results have been obtained also in regard to quasiparticle excitations and their interaction with collective states. In the framework of the shell cranking model for a number of even nuclei (isotopes of Se and Kr) the dependence of the aligned angular momentum on the frequency of rotation has been studied. Analysis of this dependence has permitted observation of a characteristic effect of back bending, which had been observed previously in nuclei with $A > 100$, discovery of bands of states built on two-quasiparticle excitations (so-called "superbands"), determination of the point of crossing of these bands, of the unshifted energies of states with identical spin with the interaction turned off, and of the shift of the energies as a result of interaction. The

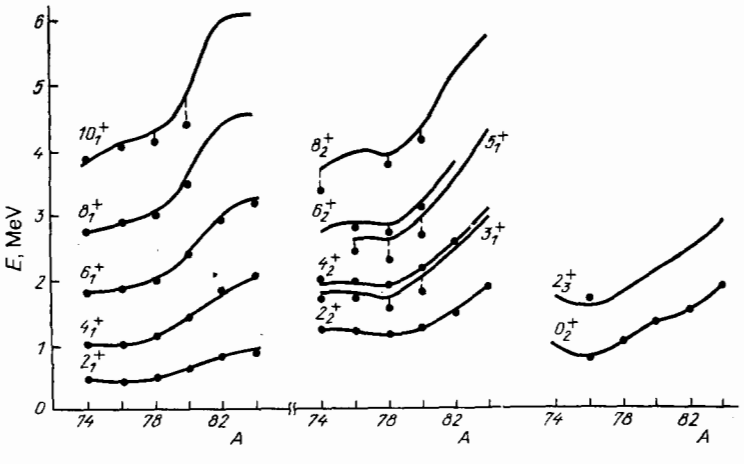

FIG. 6. Comparison of excitation energies of states of Kr isotopes measured experimentally and calculated in the framework of the interacting boson model.

analysis makes it possible also to extract information on the amplitudes of mixed states and on the magnitude of the aligned angular momentum of a superband. In Ref. 63 comparison of the discussed dependence for ^{80}Kr with similar dependences in neighboring nuclei with odd A has permitted identification of the superband in ^{80}Kr as based on a two-quasiproton state.

Winter and Dubbers[62] have observed a new effect of enhancement of M1 transitions between 10^+ states of ^{78}Kr with identical spin. A similar effect has been observed in study of ^{76}Se.[61] This phenomenon is explained by strong mixing of the interacting states, as a result of which the role of diagonal matrix elements increases.

Another new effect is the observation of an anomalously strong M1 transition in a band of high-spin states of negative parity in ^{83}Kr based on three-quasiparticle excitations of the type "odd particle + two-quasiparticle excitation of a 3^- even-even core".[53] In the similar nucleus ^{86}Rb, which differs only in the type of odd particle, the value of $B(\mathrm{M1})$ rises rapidly (by two orders of magnitude) with I. It has turned out to be possible to explain both effects qualitatively in terms of the angular-momentum coupling scheme proposed in Ref. 72. This must be considered as a direct proof of the existence of three-quasiparticle states in the nuclei considered. Quasiparticle excitations are manifested especially strongly in states close to those closed in one shell. In a number of cases new isomeric states have been observed here. In a joint study[73] on the basis of a comprehensive investigation of the lifetimes of the states, the angular distribution of the γ rays, their polarization, determination of magnetic moments, and establishment of the decay scheme of ^{84}Kr, it has been possible to observe and identify the four-quasiparticle state $\nu(g_{9/2})^2_{8+}\,\pi(p_{3/2}f_{5/2})_{4+}$, (a 12^+ state with $E = 5373$ keV), which is the first four-quasiparticle state in the region of nuclei considered.

4. APPLIED STUDIES

Continuing the traditions of the Physico-Technical Institute, the cyclotron laboratory has developed applied directions of research, making broad use of the methods of nuclear physics in other fields of science and technology.

In a number of cases the developments of the Physico-Technical Institute were pioneer efforts. For example, the studies of Coulomb excitation in their time were responsible for a strengthening of the technique of scintillation γ spectrometry. This in turn made it possible to carry out the first study[74] in the USSR which significantly extended the possibilities of activation analysis, in which γ rays, and not β particles, were detected. Very small impurity concentrations (10^{-6}%) of various elements were detected in silicon. A new method was proposed for determination of ^{18}O, based on detection of the 350-keV γ rays emitted in the reaction ^{18}O(α,n) ^{21}Ne.[75] This method turned out to be very sensitive and has been used successfully for indication of oxygen in such problems as study of the mechanism of inclusion of oxygen in biological structures under the action of light,[76] clarification of the question of participation of xanthophylls in oxygen transfer,[77] study of the mechanism of synthesis of vitamin B_1,[78] and others.

The large set of ions which can be accelerated, the possibility of varying their energy by a factor of ten, the existence of a beam-scanning system, and the experience accumulated in carrying out fundamental research have permitted creation of an entire spectrum of techniques for solution of specific applied problems. The greatest development has occurred in bombardment by high-energy ions and in nuclear analytic methods of studying surface layers of solids.[79]

The production at the beginning of the 70s of argon ions with energy of about 1 MeV per nucleon made possible a series of studies on development of the technology of the production of nuclear filters, on investigation of their characteristics, and of the methods of measurement of the diameters of the pores with allowance for the shape of the microchannels.[80]

The collaboration of the Cyclotron Laboratory with the semiconductor laboratories at the Physico-Technical Institute has turned out to be productive. The violent development of the physics and technology of semiconductors required new approaches to technological operations. One of the first studies on the deep implantation of ions at the Physico-Technical Institute cyclotron was a study of the creation of a semi-insulated guard layer by proton bombardment of a GaP structure.[81] As the result of choice of optimal conditions of bombardment it was possible to obtain in these structures a breakdown voltage close to the theoretical value for a given concentration of uncompensated ionized donors. In practice this meant an increase of the breakdown strength by a factor of two.

A major group of studies was carried out jointly with the Laboratory of Contact Phenomena in Semiconductors. Deep implantation of oxygen ions made possible the creation of continuous heterolasers in the InGaAsP system,[82] and stripe heterolasers based on double heterostructures in the InGaAsP-InP system[83] and in the AlAs-GaAs system.[84]

Let us dwell on several nuclear analytic methods developed at the Physico-Technical Institute Cyclotron Laboratory.

A technique was developed for determination of hydrogen content on the basis of deuterium with use of the reaction ^{2}D (^{3}He, p)α. Of the latest studies in this area we shall mention the determination of the hydrogen content in amorphous tantalum oxide.[85] Here a knowledge of the behavior of hydrogen is important from the point of view of technological processes and of use of this material in electrolytic capacitors.

A long series of studies utilizing this nuclear reaction was carried out for the purpose of determining the absorption capability of the surface of amorphous and polycrystalline films of oxides of the transition metals. Interest in this activity is to a great extent due to the ability of a large number of transition metal oxides to change their physical characteristics (optical, electrical, structural, etc.) radically on injection of hydrogen into these compounds. In one case the photoinjection of hydrogen as a result of its splitting off from molecules of organic compounds adsorbed on an oxide surface was studied.[86]

Excitation by protons and heavy ions of characteristic x rays of elements of the irradiated target is used in the Physico-Technical Institute Cyclotron Laboratory for quantitative analysis. The radiation is recorded by a semiconductor detector with high energy resolution ($\sim$250 eV in the 14.4-keV region). Normalization of the yields of characteristic radiation is accomplished either on the basis of the charge transferred by the ions or on the basis of the intensity of a

standard characteristic x ray. In particular, this method was used for determination of the loss of ruthenium in preparation of oxidized ruthenium-titanium anodes and for determination of their useful life,[87] for study of the effect of the elemental composition of polycrystalline zinc selenide on its optical properties, and in a number of other studies.

At the present time the method of Rutherford back-scattering of charged particles is acquiring more and more use, since it permits not only determination of impurities of various elements but also measurement of their distribution in depth. In the mass region in the middle of the periodic table use of carbon and nitrogen ions has turned out to be best. For detection of scattered ions in the laboratory, a ring-shaped surface-barrier detector is used. The average detection angle with respect to the direction of the initial beam is about 170°. Provision is made for change of samples without breaking the vacuum. At the Physico-Technical Institute Cyclotron Laboratory the Rutherford back-scattering method is being used for systematic study of lead silicate glasses, photochromic glasses, optical fiber waveguides, and other materials.

5. CONCLUSION

Immediately after the startup of the cyclotron, the laboratory staff had to solve scientific problems of importance to defense, and their successful solution in itself justified all the expenditures and efforts involved in construction of the cyclotron and confirmed the insight of its planners.

Years passed. The quantity, sizes, and number of different types of accelerators increased with extraordinary rapidity. Many of the machines contemporary with the Physico-Technical Institute cyclotron have already been closed down or have been radically rebuilt. In the USSR a number of new accelerators, including ones of very high energy, have been built.

In view of this it is remarkable that in one of the oldest cyclotrons timely studies continue to be carried out at the present time and a number of interesting physics results and conclusions have been obtained.

What has been responsible for the long life of the Physico-Technical Institute's cyclotron? This is explained by a number of circumstances. Technically, an important role was played by the initiation of studies of nuclear reactions by means of accelerated heavy ions. The advantages and possibilities resulting from their use and the results obtained by this means have been set forth in the preceding parts of this article. The Physico-Technical Institute Cyclotron Laboratory was the first in the world to use heavy ions in Coulomb excitation studies, and one of the first to use heavy ions in studies of high-spin and highly excited states of nuclei with $A < 100$.

In a purely scientific respect the appropriate choice of the direction of research was effective. It is well known that study of the radiation from nuclei produced in nuclear reactions greatly extends the possibilities of nuclear spectroscopy research. A characteristic feature of studies in the laboratory was the use for nuclear spectroscopy of new types of reactions—Coulomb excitation and reactions leading to production of high-spin and highly excited states. An important feature of these two basic directions developed at the cyclotron laboratory was the possibility of realization of highly efficient methods of measurement of the reduced probabilities of electromagnetic transitions (directly or on the basis of measurement of the associated τ values). As has been mentioned above, the calculated values of transition probabilities depend strongly on the initial theoretical assumptions, and the systematics of data on reduced probabilities is exceptionally important for development of ideas regarding nuclear structure.

The success of the studies was facilitated to a large degree by the productive contact with theoreticians and by their assistance in realization of specific computational programs. Here we would like to mention first of all the connection of the laboratory with G. Alaga (Yugoslavia), S. T. Belyaev, B. L. Birbrair, F. Donau (East Germany), V. G. Zelevinskiĭ, V. I. Isakov, V. M. Mikhaĭlov, A. D. Piliya, L. A. Sliv, K. A. Ter-Martirosyan, and A. G. Shuvaev.

An important role in the long useful life of the cyclotron and its suitability for solution of physics and practical problems of increasing difficulty was played also by its continuing modernization, which resulted in increase of the set of heavy ions which could be accelerated, broadening of their energy range, increase of the external-beam intensity by an order of magnitude or more, and reduction in the energy spread of the accelerated ions.

Finally, the right to existence and long life of the Physico-Technical Institute cyclotron was in no small degree confirmed by the significance of the applied studies carried out in it. The content of these studies has been set forth in the appropriate part of this article. Here it is important to emphasize two circumstances. The first is that in a number of cases research with the cyclotron provided the most direct and effective means for achievement of a successful result. The second is that the performance of applied research turned out to be possible as the result of the use of technical results obtained in the course of fundamental research. For example, the various activation methods based on analysis of prompt x rays and γ rays and used for determination of the purity of materials and study of the kinetics of processes in certain materials were based on mastery of the technique of scintillation and Ge(Li) detectors. The technique of step-by-step change and accurate measurement of the energy of various ions, which was used in physics research, was widely used in work on deep implantation of ions, development of the technology of preparation of new semiconducting devices, and in measurements of the backscattering of ions for determination of the content of impurities in certain materials.

A role of no small importance was played also by the constant and close collaboration of the cyclotron laboratory with the other laboratories of the Physico-Technical Institute.

Finally, it must be mentioned that the cyclotron, which was intended initially as a device for purely nuclear research, turned out to be irreplaceable in solution of a number of problems in other and very different areas of science and technology such as the technology of preparation of new semiconducting devices, biochemical and physiological studies, investigation of the purity of optical materials, and many others.

Today also the circle of problems oriented towards use of the Physico-Technical Institute cyclotron is far from exhausted. The continuing modernization of the cyclotron, the constant improvement of the technique of detection of radio-

active radiation, and the construction of new measuring apparatus all create excellent prospects for use of the Physico-Technical Institute cyclotron in solving urgent problems of nuclear physics and for providing the possibilities of application to other fields of science and technology.

In conclusion the authors express their gratitude to S. Ya. Nikitin for valuable remarks which the authors have attempted to take into account.

[1)]The name Mysovskiĭ has already been mentioned in this article. Professor L. V. Mysovskiĭ (1888–1939) was an outstanding physicist with whom is associated not only the startup of the first cyclic accelerator in the Soviet Union (if we disregard the baby cyclotron at the Physico-Technical Institute), but also important research on cosmic rays, thick-layered photographic emulsions, and γ defectoscopy. It is surprising that a detailed biography of this major scientist has not yet been written.

[2)]The large amount of work carried out on order of the Leningrad Physico-Technical Institute by the Engineering Physics and Electrical-Mechanical Departments at the M. I. Kalinin Leningrad Polytechnic Institute has been discussed in detail in Ref. 8, page 90.

[3)]This text made it possible later to find in the archives the corresponding decree of the Economic Council.

[4)]It is necessary to mention here the tremendous assistance provided to the Leningrad Physico-Technical Institute in all this work from the managements of the Elektrosila plant (by the plant's chief engineer D. V. Efremov) and of the Bol'shevik plant (at this plant, in particular, its chief engineer, L. P. Gonar, proposed the use of Armco iron for construction of the electromagnet). We note that the director of the Bol'shevik plant at that time was D. F. Ustinov.

[5)]Here there is an error: the Radium Institute cyclotron has been "forgotten." The authors.

[6)]Plutonium was made also in the restored Radium Institute cyclotron.[13b]

[7)]See also Ref. 16, page 45.

[1]A. P. Grinberg, Usp. Fiz. Nauk **117**, 333 (1975) [Sov. Phys. Usp. **18**, 815 (1975)].

[2]Contribution of Academician A. F. Ioffe to Establishment of Nuclear Physics in the USSR (in Russian), edited by V. M. Tuchkevich, Nauka, L., 1980.

[3]L. V. Mysovskiĭ and V. N. Rukavishnikov, Dokl. Ross. Akad. Nauk Ser. A, p. 53 (1922).

[4]V. Ya. Frenkel', Vopr. Istor. Estestvozn. Tekh., No. 3, 170 (1981).

[5]A. P. Grinberg, Physics: Problems, History, and People (in Russian), Nauka, L., 1986, p. 173.

[6]A. A. Tsygikalo and A. P. Klyucharev, Essays on the History of Development of Nuclear Physics in the USSR (in Russian), Naukova dumka, Kiev, 1982, p. 39.

[7]N. A. Khizhnyak, *ibid.*, p. 51.

[8]A. P. Grinberg and V. Ya. Frenkel', Igor' Vasil'evich Kurchatov at the Physico-Technical Institute (in Russian), Nauka, L., 1984.

[9]D. G. Alkhazov , V. P. Shilov, and V. P. Éĭsmont, First in Europe. History of the Construction and Prewar Years of the Radium Institute Cyclotron (in Russian), preprint of the V. G. Khlopin Radium Institute, Part 1 (RI-157), Part 2 (RI-158). Leningrad, 1982.

[10]Archives of the A. F. Ioffe Physico-Technical Institute, Fond 3, opis' 1, ed khr. 47, Materials of the Scientific Council, list 15/oborot.

[11]L. M. Nemenov, Atomnaya énergiya **44**, 17 (1978) [Sov. Atomic Energy **44**(1), 13 (1978)].

[12]V. I. Merkin, Recollections of Academician I. V. Kurchatov (in Russian), Nauka, M., 1983, p. 29.

[13]a) M. G. Pervukhin, *ibid.*, p. 6. b) L. I. Lazarev, L. V. Komlev, G. S. Sinitsyna, and M. P. Koval'skaya, Radiokhimiya **24**, 401 (1982) [Sov. Radiochem. (1982)].

[14]V. Ya. Frenkel', Usp. Fiz. Nauk **96**, No. 3, 529 (1968) [Sov. Phys. Usp. **11**, 831 (1969)].

[15]Nuclear Physics (in Russian), Compiled by Yu. I. Koptev, Nauka, L., 1968.

[16]I. N. Golovin and I. V. Kurchatov, Atomizdat, Moscow, 1978.

[17]K. A. Ter-Martirosyan, Zh. Eksp. Teor. Fiz. **22**, 284 (1952).

[18]A. P. Grinberg and I. Kh. Lemberg, Zh. Eksp. Teor. Fiz. **30**, 807 (1956) [Sov. Phys. JETP **3**, 962 (1956)].

[19]D. G. Alkhazov, D. S. Andreev *et al.*, Zh. Eksp. Teor. Fiz. **30**, 809 (1956) [Sov. Phys. JETP **3**, 964 (1956)].

[20]A. P. Grinberg and I. Kh. Lemberg, Report of the Cyclotron Laboratory at the Leningrad Physico-Technical Institute, USSR Academy of Sciences (in Russian), Leningrad Physico-Technical Institute, Leningrad, 1956, p.1.

[21]D. S. Andreev, V. D. Vasil'ev *et al.*, Izv. AN SSSR, Ser. fiz. **25**, 832 (1961) [Bull. Acad. Sci. USSR, Phys. Ser. **25**, 842 (1961)].

[22]D. G. Alkhazov, K. I. Erokhina, and I. Kh. Lemberg, Izv. AN SSSR, Ser. fiz. **27**, 211 (1963) [Bull. Acad. Sci. USSR, Phys. Ser. **27**, 221 (1963)].

[23]H. E. Gove Proc. of Intern. Conf. on Nuclear Structure, Kingston, Canada, 1960, North-Holland, Amsterdam, 1960.

[24]S. T. Belyaev, K. Dan. Vidensk. Selsk. Mat.-Fys. Medd. **31**, No. 11 (1959).

[25]B. L. Birbrair, K. I. Erokhina, and I. Kh. Lemberg, Izv. AN SSSR, Ser. fiz. **27**, 150 (1963) [Bull. Acad. Sci. USSR, Phys. Ser. **27**, 161 (1963)].

[26]B. L. Birbrair, K. I. Erochina, and I. Kh. Lemberg, Nucl. Phys. **A145**, 129 (1970).

[27]Yu. P. Gangrskiĭ and I. Kh. Lemberg, Izv. AN SSSR, Ser. fiz. **26**, 1001 (1962) [Bull. Acad. Sci. USSR, Phys. Ser. **26**, 1009 (1962)].

[28]D. G. Alkhazov, D. S. Andreev *et al.*, Izv. AN SSSR, Ser. fiz. **27**, 1285 (1963) [Bull. Acad. Sci. USSR, Phys. Ser. **27**, 1263 (1963)].

[29]Yu. P. Gangrskiĭ and I. Kh. Lemberg, Izv. AN SSSR, Ser. fiz. **26**, 212 (1962) [Bull. Acad. Sci. USSR, Phys. Ser. **26**, 212 (1962)].

[30]D. G. Alkhazov, A. P. Grinberg *et al.*, Zh. Eksp. Teor. Fiz. **35**, 1325 (1958) [Sov. Phys. JETP **8**, 926 (1959)].

[31]O. F. Afonin, Yu. P. Gangrskiĭ *et al.*, Zh. Eksp. Teor. Fiz. **43**, 1604 (1962) [Sov. Phys. JETP **16**, 1130 (1963)].

[32]O. Hansen and O. Nathan, Nucl. Phys. **42**, 197 (1963).

[33]D. G. Alkhazov, K. I. Erokhina, and I. Kh. Lemberg, Izv. AN SSSR, Ser. fiz. **27**, 1363 (1963) [Bull. Acad. Sci. USSR, Phys. Ser. **27**, 1339 (1963)].

[34]D. G. Alkhazov, K. I. Erokhina, and I. Kh. Lemberg, Izv. AN SSSR, Ser. fiz. **28**, 1667 (1964) [Bull. Acad. Sci. USSR, Phys. Ser. **28**, 1559 (1964)].

[35]D. G. Alkhazov, V. D. Vasil'ev *et al.*, Izv. AN SSSR, Ser. fiz. **28**, 1683 (1964) [Bull. Acad. Sci. USSR, Phys. Ser. **28**, 1575 (1964)].

[36]D. G. Alkhazov, L. N. Gal'perin *et al.*, Izv. AN SSSR, Ser. fiz. **29**, 787 (1965) [Bull. Acad. Sci. USSR, Phys. Ser. **29**, 791 (1965)].

[37]K. I. Erokhina, R. K. Zhirgulyavichyus *et al.*, Izv. AN SSSR, Ser. fiz. **38**, 1679 (1974) [Bull. Acad. Sci. USSR, Phys. Ser. **38**(8), 102 (1974)].

[38]K. I. Erokhina, R. K. Zhirgulyavichyus *et al.*, Litov. Fiz. Sb. **14**, 591, 817 (1974).

[39]D. S. Andreev, G. M. Gusinskiĭ *et al.*, Izv. AN SSSR, Ser. fiz. **39**, 2020 (1975) [Bull. Acad. Sci. USSR, Phys. Ser. **39**(10), 10 (1975)].

[40]V. A. Belyakov, R. N. Litunovskiĭ *et al.*, Proc. of the Fifth All-Union Conf. on Charged-Particle Accelerators (in Russian), Nauka, M., 1977, Vol. 1, p. 107.

[41]A. V. Matyukov, A. S. Smirnov *et al.*, Report of the Cyclotron Laboratory, Physico-Technical Institute of the USSR Academy of Sciences, Leningrad, 1979.

[42]M. A. Ivanov, I. Kh. Lemberg, and A. S. Mishin, Prib. Tekh. Éksp., No. 3, 53 (1974) Instrum. Exper. Tech. No. 3, 684 (1974)].

[43] I. Kh. Lemberg and A. A. Pasternak, Pis'ma Zh. Eksp. Teor. Fiz. **19**, 784 (1974) [JETP Lett. **19**, 401 (1974)].

[44]M. F. Kudoyarov, I. Kh. Lemberg, and A. A. Pasternak, Program and Abstracts of the Thirty-First Conf. on Nuclear Spectroscopy and Nuclear Structure (in Russian), Nauka, M.-L., 1981, p. 410.

[45]A. A. Pasternak, Program and Abstracts of the Thirty-First Conf. on Nuclear Spectroscopy and Nuclear Structure (in Russian), Nauka, M.-L., 1981, pp. 407, 408.

[46]D. S. Andreev, K. I. Erokhina *et al.*, Izv. AN SSSR, Ser. fiz. **46**, 30 (1982) [Bull. Acad. Sci. USSR, Phys. Ser. **46**(1), 22 (1982)].

[47]I. Kh. Lemberg and A. A. Pasternak, Contemporary Methods of Nuclear Spectroscopy. 1984 (in Russian), Nauka, L., 1985, p. 3.

[48]G. M. Gusinskiĭ, A. S. Mishin *et al.*, Contemporary Methods of Nuclear Spectroscopy. 1984 (in Russian), Nauka, L., 1985, p. 64.

[49]T. N. Gruzinova, K. I. Erokhina *et al.*, Prikl. Yad. Spektrosk. No. 7, 66 (1977), Atomizdat, M.

[50]A. P. Grinberg, A. E. Zobov *et al.*, Prikl. Yad. Spektrosk. No. 10, 3 (1981), Atomizdat, M.

[51]M. F. Kudoyarov, I. Kh. Lemberg *et al.*, Yad. Fiz. **27**, 577 (1978) [Sov. J. Nucl. Phys. **27**, 309 (1978)].

[52]A. A. Aleksandrov, M. F. Kudojarov *et al.*, Nucl. Phys. **A321**, 189 (1979).

[53]M. F. Kudoyarov, I. Kh. Lemberg *et al.*, Izv. AN SSSR, Ser. fiz. **48**, 1887 (1984) [Bull. Acad. Sci. USSR, Phys. Ser. **48**(10), 29 (1984)].

[54]A. E. Zobov, A. L. Izotov *et al.*, Decay Schemes of Excited States of the Nuclei ^{84,85}Kr (in Russian), Preprint of the A. F. Ioffe Physico-Technical Institute, USSR Academy of Sciences, No. 967, L., 1985.

[55]U. Ĭ. Zhovliev, V. G. Kiptilyĭ *et al.*, Izv. AN SSSR, Ser. fiz. **49**, 2096

(1985) [Bull. Acad. Sci. USSR, Phys. Ser. **49**(11), 13 (1985)].
[56]M. F. Kudoyarov, I. Kh. Lemberg, and A. A. Pasternak, Izv. AN SSSR, Ser. fiz. **43**, 2167 (1979) [Bull. Acad. Sci. USSR, Phys. Ser. **43**(10), 126 (1979)].
[57]M. A. Ivanov, I. Kh. Lemberg *et al.* Izv. AN SSSR, Ser. fiz. **39**, 1695 (1975) [Bull. Acad. Sci. USSR, Phys. Ser. **39**(8), 108 (1975)].
[58]G. M. Gusinskiĭ, M. A. Ivanov *et al.*, Izv. AN SSSR, Ser. fiz. **41**, 66 (1977) [Bull. Acad. Sci. USSR, Phys. Ser. **41**(1), 52 (1977)].
[59]A. D. Efimov, K. I. Erokhina *et al.*, Lifetimes of Collective States of the Nucleus ^{70}Ge and the Interacting Boson Model (in Russian), Preprint of the A. F. Ioffe Physico-Technical Institute of the USSR Academy of Sciences, No. 347, L., 1983.
[60]V. G. Kiptilyĭ, I. Kh. Lemberg *et al.*, Izv. AN SSSR, Ser. fiz. **43**, 2276 (1979) [Bull. Acad. Sci. USSR, Phys. Ser. **43**(11), 26 (1979)].
[61]A. E. Zobov, V. G. Kiptilyĭ *et al.*, Izv. AN SSSR, Ser. fiz. **48**, 1878 (1984). [Bull. Acad. Sci. USSR, Phys. Ser. **48**(10), 20 (1984)].
[62]G. Winter, F. Dubbers *et al.*, J. Phys. G **11**, 277 (1985).
[63]L. Funke, J. Döring *et al.*, Nucl. Phys. **A355**, 228 (1981).
[64]D. Janssen, F. Dönau, S. Frauendorf, and R. V. Jolos, Nucl. Phys. **A172**, 145 (1971).
[65]D. Janssen, F. Dönau, S. Frauendorf, and R. V. Jolos, Nucl. Phys. **A172**, 145 (1971).
[66]K. I. Erokhina, A. D. Efimov *et al.*, Izv. AN SSSR, Ser. fiz. **48**, 328 (1984). [Bull. Acad. Sci. USSR, Phys. Ser. **48**(2), 104 (1984)].
[67]D. N. Doĭnikov, K. I. Erokhina *et al.*, Lectures at the Tenth All-Union School on Nuclear Physics, Khumsan, 1983 (in Russian), Branch of the Academy of Sciences, Tashkent, 1985, Part 2, p. 130.
[68]R. V. Dzholos, I. Kh. Lemberg, and V. M. Mikhaĭlov, Fiz. Elem. Chastits At. Yadra **16**, 280 (1985) [Sov. J. Part. Nucl. **16**, 121 (1985)].
[69]V. G. Zelevinskiĭ, Old and New Phenomenology of Quadrupole Collective Motion in Nuclei (in Russian), Preprint, Nuclear Physics Institute, Siberian Division, USSR Academy of Sciences, No. 56, Novosibirsk, 1983.
[70]O. K. Vorov and V. G. Zelevinsky, Nucl. Phys. **A439**, 207 (1985).
[71]O. K. Vorov and V. G. Zelevinsky, Boson Models of Low-Lying Vibrations in Spherical Nuclei, Preprint, Institute of Nuclear Physics, Siberian Division, USSR Academy of Sciences, No. 120, Novosibirsk, 1985.
[72]F. Donau and G. Frauendorf, Proc. of Intern. Summer School, Polona Brasna, Roumanĭa, 1982.
[73]H. Rotter, J. Döring *et al.*, Phys. Lett. **163B**, 323 (1985).
[74]K. I. Erokhina, I. Kh. Lemberg *et al.*, Zavod. Lab. No. 7, 821 (1960) [Ind. Lab. (USSR) No. 7 (1960)].
[75]I. K. Lemberg, A. B. Girshin, and G. M. Gusinskiĭ, Zavod. Lab. No. 12, 1499 (1966) [Ind. Lab. (USSR) No. 12, 1833 (1966)].
[76]G. M. Gusinskiĭ, I. Kh. Lemberg *et al.*, Dokl. Akad. Nauk SSSR **249**, 1002 (1979) [Dokl. Biochem. **249**, 418 (1979)].
[77]V. S. Saakhov, I Kh. Lemberg *et al.*, Dokl. Akad. Nauk SSSR **193**, 713 (1970) [Dokl. Biochem. **193**, 213 (1970)].
[78]L. M. Firsov, M. I. Khokhlacheva, and G. M. Gusinskiĭ, Biokhimiya **41**, 1176 (1976) [Biochemistry (USSR) **41**, 960 (1976)].
[79]G. M. Gusinskiĭ and V. O. Naĭdenov, Proc. of the Intern. Conf. on Cyclotrons and Their Application. Bechyně, Czechoslovakia, 1985 (in Russian), JINR, Dubna, R9-85-707, 1985, p. 331.
[80]Yu. F. Gagarin, G. M. Rusinskiĭ *et al.*, Prib. Tekh. Éksp., No. 6, 213 (1976) [Instrum. Exper. Tech. No. 6, 1829 (1976)].
[81]Yu. A. Gol'dberg, G. M. Gusinskiĭ *et al.*, Fiz. Tekh. Poluprovod. **12**, 562 (1978) [Sov. Phys. Semiconductors **12**, 324 (1978)].
[82]Zh. I. Alferov, A. T. Gorelenok *et al.*, Izv. AN SSSR, Ser. fiz. **43**, 1448 (1979). [Bull. Acad. Sci. USSR, Phys. Ser. **43**(7), 102 (1979)].
[83]A. T. Gorelenok, V. I. Kolyshkin, and I. S. Tarasov, Zh. Tekh. Fiz. **53**, 1973 (1983) [Sov. Phys. Tech. Phys. **28**, 1213 (1983)].
[84]V. I. Kolyshkin and E. L. Portnoĭ, Pis'ma Zh. Tekh. Fiz. **3**, 947 (1977) [Sov. Tech. Phys. Lett. **3**, 388 (1977)].
[85]G. M. Gusinskiĭ, V. M. Muzhdaba *et al.*, Zh. Tekh. Fiz. **56**, 204 (1976) [Sov. Phys. Tech. Phys. **31**, 121 (1976)].
[86]A. I. Gavrilyuk, G. M. Gusinskiĭ *et al.*, Fiz. Tverd Tela **28**, 2053 (1986) [Sov. Phys. Solid State **28**, 1147 (1986)].
[87]G. M. Gusinskiĭ, V. I. Ignat'ev *et al.*, Zavod. Lab. **50**, 27 (1984) [Ind. Lab. (USSR) **50** (1984)].

Translated by Clark S. Robinson