Condensed- and compressed-gas lasers

N. G. Basov and V. A. Danilychev

P. N. Lebedev Physics Institute, USSR Academy of Sciences
Usp. Fiz. Nauk **148**, 55–100 (January 1986)

The research into condensed- and compressed-gas lasers, which led to development of excimer lasers, of electron-beam-controlled carbon-monoxide and dioxide lasers, and of high-pressure lasers operating on electronic transitions of inert gases, is reviewed. The physical principles underlying the methods of population inversion in dense gases and of the pumping mechanisms are considered. The parameters of high-pressure pulsed, pulse-train, and cw gas lasers are cited. The use of high-pressure gas lasers in industry are discussed. The emphasis is on the results of investigations carried out at the Lebedev Physics Institute (FIAN) in 1965–1985.

CONTENTS

1. INTRODUCTION

The interest in condensed and compressed gases for use as active media in high-power lasers is due to their high optical homogeneity, the possibility of attaining high density of the active particle, and the availability of gas lasers with efficiencies up to 50%. The large gain-line width in dense gases permits continuous tuning of the frequency and generation of ultrashort pulses. These properties of condensed and compressed gases has made them promising active media for high-power lasers, the need for which is particularly felt of late in view of progress in research into thermonuclear fusion, stimulation of specific chemical reactions, and laser technology.

The problem of developing high-power condensed- and compressed-gas lasers meets with a number of fundamental difficulties. First, the traditional method of exciting gas lasers, by glow discharge, cannot cope with large enough compressed-gas volumes, inasmuch as the discharge becomes unstable at high pressures that cause pinching and make bulk excitation impossible.[1] New methods of exciting dense gases must therefore be developed. Second, collisional laser-level broadening, which is proportional to the gas pressure, requires an appreciable increase of the pumping rate when the pressure is increased, especially when the gas goes over into a condensed state. Finally, at high pressures a greater role is assumed by ternary quenching collisions whose rate increases as the square of the pressure. The last circumstance compels a search for laser media in which the processes of laser-level population and of the population inversion are also based on ternary collisions.

We report in this review research carried out at the Lebedev Physics Institute (FIAN) in the period from 1966 through 1985, when pumping methods were developed (by the electron-beam or by the electron-beam control method, the latter a superposition of an electron beam and an electric field), and condensed- and compressed-gas lasers were produced.

These lasers comprise excimer lasers for the vacuum and near-ultraviolet regions, ultraviolet-band lasers using mixtures of argon and helium with N_2 and N_2^+ molecules, visible and near-infrared lasers on electronic transitions of the inert-gas atoms Xe, Kr, Ar, and Ne, and high-pressure electroionization lasers on carbon monoxide and dioxide.

 0038-5670/86/010031-26$01.80

TABLE I. Primary specific ionization produced by electrons in various gases.

Electron energy	Number (γ) of primary ion pairs per cm of path in the gas H_2	He	Ne	Ar
0.205	8.45	7.56	10.45	41.7
0.500	6.04	5.58	13.4	30.5
0.885	5.44	5.08	12.5	27.7
1.17	5.3			
1.55	5.32	5.02	12.4	27.8

2. METHODS OF EXCITING CONDENSED- AND COMPRESSED-GAS LASERS

2.1. Electron beam excitation

In 1961, N. G. Basov[1] proposed to use an electron beam to excite lasers with working media having a high density of active particles. The use of this method led to development of electron-excited semiconductor lasers.[2] In 1966, N. G. Basov proposed to use the electron-beam-pumping method to obtain lasing in the vacuum ultraviolet (VUV) region of the spectrum by exciting cooled inert gases (He, Ne, Ar, Kr, and Xe).[3]

In Ref. 4, devoted to the first experimental attempts to obtain VUV lasing from xenon crystals, the advantages of electronic excitation were formulated as follows: "Since the effective temperature of an electron beam used to pump lasers in very high, this method can be used to excite practically any energy level."

It must be added to the foregoing property of electron beams that the high-current pulsed electron beams used in Refs. 3 and 4 made possible tremendous specific pump powers, up to 10^9 W/cm^3, so that by 1970–1971 stimulated emission and lasing became feasible in condensed and compressed gases.[6–10]

Let us examine the basic characteristics of an electron beam as a pump for compressed-gas lasers.[6] High-energy electrons passing through a compressed or condensed gas experience elastic and inelastic collisions with the nuclei and electrons of the decelerating medium. The electron beams used to excite high-pressure gas lasers have energies ranging from 0.2 to 1.0 MeV. In this energy range we can neglect in many practical cases the electron radiation due to the deceleration in the medium. Elastic collisions of the electrons with nuclei of the decelerating medium cause the electrons to be scattered. The role of this scattering increases with decreasing electron energy, and the average scattering angle is proportional to the square root of the scatterer thickness. Although the scattering process does not determine the excitation intensity of the laser active medium directly, it does influence noticeably the geometric dimensions of the excitation region and the pump density. The mean squared scattering angle θ is inversely proportional to the energy E of the incident particles, and is proportional to the charge of the scattering nuclei and to the square root of the scatterer thickness x:

$$\langle\theta^2\rangle_{\rm av}^{1/2} \sim z\,\frac{1}{E}\,x^{1/2}. \qquad (1)$$

At large thicknesses of the medium, exceeding half the range, the angular distribution of the scattered electrons takes the form

$$W(\theta) \sim \cos^2\theta. \qquad (2)$$

The average scattering angle in this case reaches a maximum $\approx 33°$ and remains constant with further increase of the thickness.

The inelastic losses of the electrons moving through the compressed gas are determined by the losses Q_i to ionization and Q_e to excitation of the atoms and molecules of the medium.

Important parameters that govern the ionization density in a gas through which fast electrons pass are the total number γ of the electron-ion pairs produced by the electrons per centimeter of range, and the energy w_e needed to produce one pair. The value of w_e is practically independent of the electron energy and is determined only by the type of gas. The total ionization is the sum of the primary and secondary ionizations. On the average, one electron produced in primary ionization is accompanied by ≈ 1.5 secondary electrons. Table I lists the number of electron pairs produced as a result of primary ionization by electrons in several gases at atmospheric pressure.[6]

Figure 1 shows the number γ of electron-ion pairs produced by a fast electron per cm of path as a function of the electron energy E in air at atmospheric pressure and at a temperature $T = 10$ °C.[2)]

The energy w_e needed to produce one electron-hole pair is practically proportional to the gas-atom ionization energy and is of the order of 20–40 eV (42.7, 26.4, 21.9, 36.6, and 34.5 eV for He, Ar, Xe, N_2, CO_2 atoms, respectively).

When an electron beam of current density j_e acts on a gas, the rate $q = dn_{e,i}/dt$ of electron-ion pair production is

$$q = \frac{dn_{e,i}}{dt} = \frac{\gamma j_e P}{P_0 e} = \frac{1}{w_e}\,\frac{dE}{dx}\,\frac{j_e}{e}; \qquad (3)$$

here γ is the number of electron-hole pairs produced in this gas by one fast electron in 1 cm of range at a pressure P_0, P is

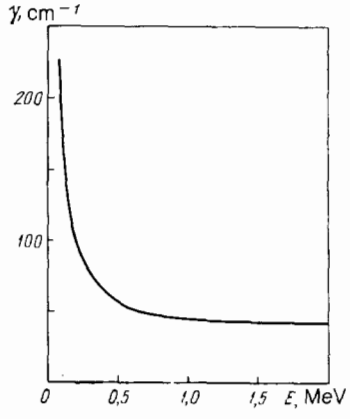

FIG. 1. Dependence, on the electron energy E, of the number (γ) of electron pairs produced by one electron of energy E per cm of path in air at pressure $P = 1$ atom and temperature 10 °C (Ref. 14).

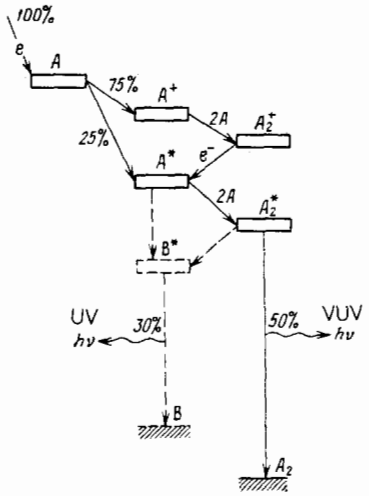

FIG. 2. Conversion of electron-beam energy upon excitation of condensed and compressed inert gases.

the real pressure of the gas, and dE/dx is the linear electron-beam energy loss in the medium. The specific pump power can therefore be estimated from the formula

$$P_p = \frac{dE}{dx}\frac{j_e}{e} = \frac{P}{P_0}\frac{\gamma j_e}{e}. \quad (4)$$

When a compressed gas is pumped by an electron beam, approximately 3/4 of the absorbed electron-beam energy goes to ionization of the atoms and molecules of the working medium, and 1/4 of the energy goes to excitation of the electron levels. In compressed inert gases, the electron-ion recombination is almost always determined by ternary collisions that give rise to electron-excited atoms.

Thus, Eq. (3) also determines in fact the creation rate of atoms in an excited electronic state. In high-pressure inert gases, the main component of the active medium of a laser operating on electronic transitions of compressed-gas atoms and molecules, ternary collisions produce excimer molecules (see the scheme in Fig. 2) that emit VUV photons as they decay. The efficiency with which the electron-beam energy absorbed in a compressed gas is emitted turns out to be very high for inert gases, $\approx 50\%$.

Addition of impurity molecules to compressed inert gases permits transfer of an appreciable fraction of the energy accumulated by the inert-gas atoms and molecules via electronic excitation to the impurity molecules, followed by emission of this energy in the UV band via electronic transitions of the impurity (see Fig. 2).

Thus, the practical result of pumping of condensed and compressed gases by an electron beam is that up to 50% of the energy of the electron beam absorbed by the medium is transformed into electronic excitation of the atoms and molecules of the working medium, and that to develop an electron-pumped laser we must solve two problems: 1) choose the working-medium composition such that the excitation is transferred to the desired upper laser level, 2) produce an electron gun that delivers the required specific excitation power.

In the first experiments on lasers with condensed and compressed xenon, the threshold pump power was attained and lasing was produced on the excimers Xe_2^*, owing to development of a cold-cathode electron gun for these experiments. The gun delivered a total electron current ≈ 1 kA, an electron energy up to 1 MeV, and a current density up to 300 A/cm^2 at an electron-current pulse duration ≈ 10 ns.[5,6,8,15] The electron beam entered the compressed gas through a niobium foil 15 μm thick (Fig. 3). Foils of Ti, Al, and Be were also used. The electron-gun used either a single-element tubular tungsten cathode (foil 50 μm thick rolled into a tube of 8 mm diameter), or a multielement tubular cathode, to produce an extended ribbonlike electron beam. Electron beams with approximately the same parameters were used later by many other researchers (see, e.g., Ref. 16).

The use of electron beams to pump compressed gases is appropriate for excitation of electronic levels of atoms and molecules, whereas direct pumping of rotational-vibrational levels by charged high-energy particles, proposed in Ref. 17, is ineffective because of the almost resonant character of the oscillation-excitation cross section, which has a sharp peak at low electron energies ≈ 1–2 eV. Thus, when rotational-vibrational transitions are excited by an electron beam, an appreciable fraction of the electron beam is wasted, and the expected efficiency of such a laser (e.g., CO_2), can apparently not exceed 1–2%. It is also noteworthy that lowering the efficiency of a laser on rotational-vibrational transitions leads inevitably to a lowering of the specific lasing power. The latter is due to the fact that in lasers on rotational-transitional transitions heat released by the active medium populates the lower laser level, and lasing is altogether impossible when the heating of the medium exceeds a critical value.

Since the mechanism whereby passage of an electron beam through a compressed gas causes lasing of excited atoms is physically equivalent to the mechanism realized in pumping by other high-energy particles (protons, α particles, γ rays, nuclear-fission products), nuclear pumping methods can be practically fully simulated by electron-beam systems.

2.2. Electron-beam-control method of pumping compressed-gas lasers

Excitation of electronic levels of atoms and molecules of a compressed gas by high-energy particles is a "single-act" process. Each act of ionization or electronic excitation produces one excited particle. The suggested multiple use of secondary electrons to excite laser working levels by applying an external electric field on a compressed gas excited by an electron beam dates back to a 1970 paper,[17] in which "in a mixed-excitation pulsed gas laser the gas is simultaneously pumped by an electron beam and an electric field. The proposed excitation method makes it possible in principle to obtain larger laser emission power because of the uniform excitation, at high pressures, of large volumes of gas. The role of the electron beam reduces in fact to creation of conditions for streamerless development of the discharge, and the excitation energy comes mainly from the external electric field."

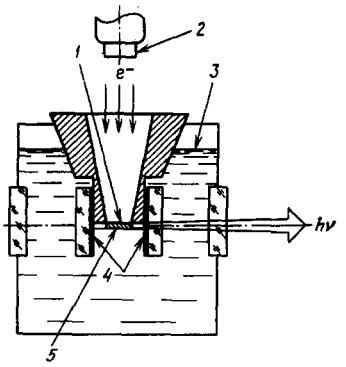

FIG. 3. Entry of an electron beam into a condensed gas.[6] 1) Be foil, 2) electron-gun cathode, 3) level of liquid Xe, 4) optical-cavity mirrors, 5) excitation region.

Secondary electrons set in motion through the dense gas by the external electric field experience up to 10^5 inelastic collisions with the gas particles before they are lost through recombination or adhesion. Gas particles can be excited in each collision act, and the energy lost thereby is replenished by the electric field in the time between collisions.

The experiments on pumping Xe, N_2, and air compressed to 7 atm,[17] and later also on mixtures of CO_2, N_2, and He at pressures up to 15 atm,[18] demonstrated a result that was quite inexplicable from the viewpoint of the then-prevailing concepts (Fig. 4). It turned out that, independently of the polarity of the applied external electric field or of the material and of the finish of the electrodes, the current through the ionized gas was stationary and satisfied Ohm's law, while the field pulse had the same time waveform as the electron-current pulse:

$$j = \sigma E; \tag{5}$$

with j the discharge-current density, E the field intensity in the discharge gap, and σ the gas electric conductivity produced by the external electron beam. The value of σ was

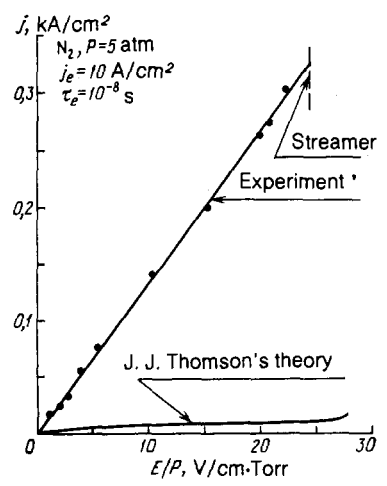

FIG. 4. Discharge-current density vs field intensity in N_2 at pressure $P = 5$ atm when the nitrogen is ionized by a beam of 700-keV electrons at a pulse duration $\approx 10^{-8}$ s and an electron-beam current density 10 A/cm^2 (Ref. 14).

described with high accuracy by the expression

$$\sigma = e\left(\frac{q}{b_e}\right)^{1/2}\frac{v_{dr}}{E} \tag{6}$$

for electropositive N_2, where b_e is the recombination current, v_{dr} the electron drift velocity in nitrogen, and $q = \gamma(p/p_0)\, j_e/e$ the rate of electron-ion pair production by the action of the electron beam.

The discrepancy between the experiment and the theory of current flow through an ionzied gas[19,20] was that, in contrast to the theory, the current in the discharge was not confined by the internal field of the plasma. The relation between the current j and the voltage $V = El$ did not agree with of J. J. Thomson's theory[6,18,20] but took the form

$$j = \frac{qL\,(be\mu_1)^{1/2}}{2\pi^{1/2}\mu_e}\left\{\left[1 + \frac{4\pi^{1/2}\mu_e e^2}{(q\mu_1)^{1/2}L^2 b}V\right]^{1/2} - 1\right\}; \tag{7}$$

here L is the distance between the electrodes, b is the electron-ion recombination coefficient, and μ_i and μ_e are the ion and electron mobilities.

Ohm's law was satisfied, and the current through the ionized gas exceeded by two orders the current predicted by J. J. Thomson's theory[6,19] (see Fig. 4).

Thus, combined excitation of a compressed-gas laser (Fig. 5), which hardly differs from excitation in an ionization chamber, permitted a tremendous energy $\approx 10^7$–10^8 W/cm^3 to be fed to the working medium, but now not from the electron beam but from an electric-voltage source. The discharge observed and investigated in these experiments was of a new non-self-sustaining type, named electron-beam-controlled (EBC) electroionization in the Soviet literature) discharge.[6,10–14]

The paper by Basov *et al.*,[5] devoted to compressed-gas lasers, was preceded by experiments[30,31] on combined excitation of gas lasers in a range of pressures and volumes, and hence also of the parameter Pd, in which no pinching of the self-sustaining glow discharge took place and no beam of ionized particles was applied.

Application of an additional ionization source[31,32] either increased or decreased the lasing power, depending on the He:Ne:CO_2 mixture composition. The current-voltage characteristic of the discharge did not differ qualitatively in this case from that of a glow discharge (Fig. 6), although it revealed distinctly a non-self-sustaining-current contribution that increased with voltage. The possibility of going to higher values of Pd by including in a self-sustaining glow discharge an additional ionization source in the form of an external electron beam was investigated in Ref. 33. It was shown there that at higher pressures a self-sustaining dis-

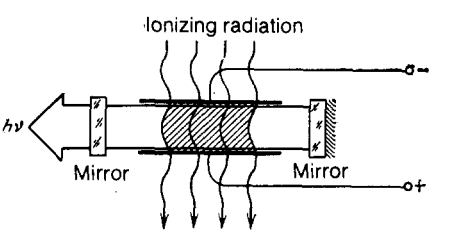

FIG. 5. Excitation of EBC laser.[11]

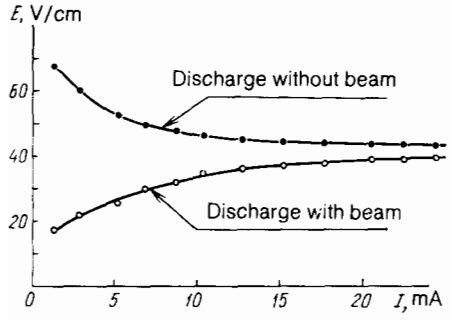

FIG. 6. Current-voltage characteristics of self-sustaining glow discharge with and without application of external additional ionization. Gas pressure $P = 6$–8 Torr, composition: Co_2:N_2:He = 1:2:8.

charge with supplementary ionization became inevitably pinched. This experimental fact revealed an extremely important feature of the EBC discharge: an obligatory condition for its existence at high pressures $Pd > Pd_{crit}$ is that there be no self-sustaining multiplication of electrons in the electric field, and that the external electric-field strength be lower than the value at which the first Townsend electron-multiplication coefficient $\alpha(E)$ in the field is zero:

$$E < E_{crit}\ ,\quad \alpha\ (E_{crit}) = 0. \tag{8}$$

Finally, to increase the working pressure in the volume of a pulsed CO_2 laser, A. V. Eletskiĭ and B. M. Smirnov, in a theoretical paper,[34] "proposed to produce by an independent method free electrons uniformly distributed over the volume," by photoionizing an easily ionized additive during the entire time of the electric-voltage pulse and, "by action of the electric field on the electron, excite the vibrational levels of the molecule." They indicated that "for the laser to operate it is necessary that the distance between the electrodes be large enough. Otherwise the plasma internal field screens the external field within times shorter the pulse time, so that the volume is not uniformly utilized and the laser output energy is drastically decreased. These difficulties can be overcome by using an alternating-current discharge (by connecting an inductance to the discharge plates)."

The main EBC discharge feature that distinguishes it in principle form the non-self-sustaining discharge that evolves in ionization chambers is the requirement that the gas be

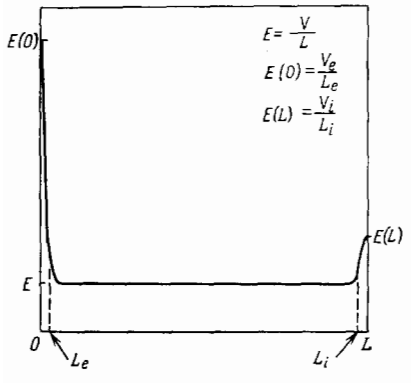

FIG. 7. Field-intensity distribution in an EBC discharge.

TABLE II. Cathode voltage drop V_e, thickness L_e of cathode space-charge layer, and parameter $E(0)/P$ in the cathode layer, for nitrogen at 13 atm pressure at various values of the parameter E/P in the active volume.

E/P, V/cm·Torr	$E(0)/P$, V/cm·Torr	L_e, cm	V_e, V
	$n_e = 10^{10}$ cm^{-3}		
5	20	$2\cdot10^{-1}$	25 000
	$n_e = 2\cdot10^{12}$ cm^{-3}		
5	79	$8.8\cdot10^{-3}$	3 500
10	92	$5.1\cdot10^{-3}$	2 330
20	107	$3\cdot10^{-3}$	1 610
	$n_e = 5\cdot10^{14}$ cm^{-3}		
5	450	$2\cdot10^{-4}$	450
10	615	$1.4\cdot10^{-4}$	428
20	850	$0.9\cdot10^{-4}$	400

ionized to a higher degree. At a degree of gas ionization $n_e/N > 10^{-8}$ (N is here the molecule density) the electric field in the cathode layer is much stronger than the critical field at which the self-sustained ionization sets in (Fig. 7), the cathode layer is $\approx 10^{-3}$–10^{-4} cm thick, and the electrons in the cathode layer are autonomously multiplied to a density at which the screening by the cathode space charge is cancelled out.

Table II lists the numerically calculated cathode layer and the electric field in the cathode layer for nitrogen at pressure 13 atm (Refs. 6, 11–14). It can be seen that at $n_e/N > 10^{-8}$ the cathode potential drop $V_e = E(0)L_e$ can be neglected, and the conductivity of the discharge gap is governed entirely by the external ionizer, even though the field $E(0)$ in the cathode region is many times stronger than the field $E = V/L$ in the active volume (V is the voltage across the discharge gap and L is the distance between the electrodes.

Reference 11 states that "at short ionization pulse durations ($\tau \approx 10^{-8}$ s) the beam energy consumed by gas ionization was 1% of the electric-excitation energy. As the ionization pulse lengthened (and with it the excitation time) the energy used to ionize the gas decreased and reached 10^{-3} of the electric energy at an ionization-pulse duration $\approx 10^{-5}$ s.

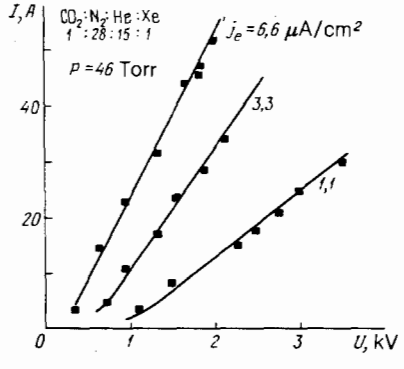

FIG. 8. Current-voltage characteristics of stationary EBC discharge.[134] Gas flow velocity $u = 90$ m/s, electron energy 190 meV, electron-beam area 18×100 cm, distance between electrodes $L = 10$ cm.

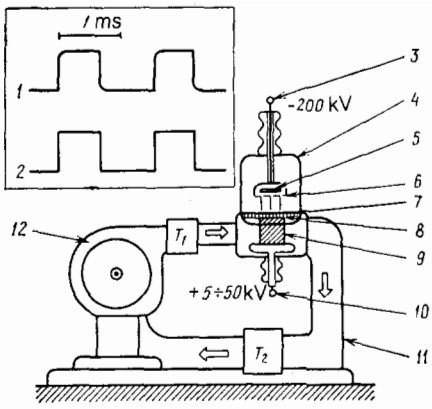

FIG. 9. Diagram of EBC laser setup with a triode electron gun.[25,27] Typical oscillograms of discharge current (1) and of electron-beam current (2) in the pulse-train regime. Discharge current amplitude ~30 A, electron-beam current amplitude ~20 mA. 3) Accelerating voltage, 4) electron gun, 5) cathode, 6) control grid, 7) screen, 8) foil, 9) discharge region, 10) discharge-supply voltage, 11) circulation loop, 12) compressor. T_1 and T_2 are heat exchangers.

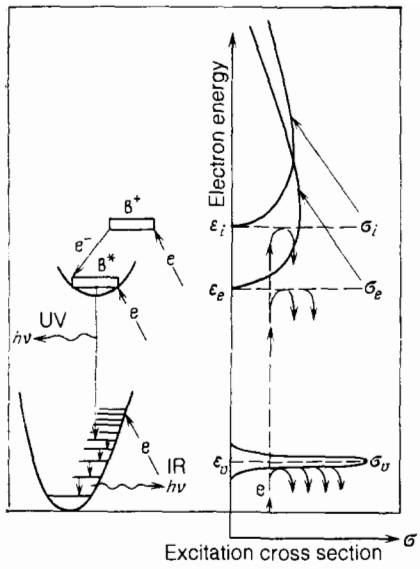

FIG. 10. Diagram illustrating excitation of electronic and vibrational levels of the molecules in an electroionization discharge. ε_v—energy of maximum cross section excitation of N_2-molecule vibrations, ε_e—energy of low electron levels, ε_i—ionization energy, B*—electron-excited molecules, B*—ionized molecules, $\sigma_v, \sigma_e, \sigma_i$ respective cross sections for vibration excitation, electron-level excitation, and ionization.

Calculations show that on going to very long pulses or to a cw regime the fraction of the ionization energy can be decreased to 10^{-4}."

The possibility of lowering the power of the ionizer (proposed in Ref. 11 to be "a stream of ionizing particles such as electrons, γ rays, or fission fragments," makes it possible in principle to raise the total technical efficiency of the EBC excitation, since the efficiency with which energy is fed to an "ohmic" active medium at long excitation durations is close to 100%, and the low efficiency of generating ionization radiation (usually less than 10%) has no effect on the total efficiency in view of the small contribution of the ionizer to the total energy balance of the apparatus.

Indeed, in an EBC cw laser, the power used for ionization is less than 100 W at a total electric-pump power[21] ≈ 100 kW (Fig. 8), and an electron-beam current $j_e = 10^{-3}$ A excites 15 A of bulk EBC discharge.

The EBC discharge was investigated theoretically and experimentally in the pulsed,[11-14,22] pulse-train,[23-25] and cw[21,23-25] regimes, with the medium ionized by an electron beam and by nuclear-reaction products.[28,29] Figure 9 shows an EBC stepup operating in the cw and pulse-train regimes.[23-25] This setup is used to generate high-power laser emission on rotational-vibrational transitions of CO and CO_2 molecules. In contrast to the electron beam, in which the electrons acquire energy in an electron accelerator and lose it in the laser working medium, in the EBC discharge the electrons gather energy directly in the working medium from the electric field and excite the atoms and molecules by collision. In an EBC discharge, in contrast to excitation by high-energy electrons, the low-lying energy levels are the ones primarily excited. Lower electron levels are excited in atomic gases (He, Ne, Ar, Kr, Xe), and vibrational energy levels in molecular gases (Fig. 10). Since the parameter E/P can be varied at will in an EBC discharge, from zero up to electric spark breakdown of the working medium [the Townsend coefficient $\alpha(E) > 0$ in the latter case], and to each value of the parameter E/P there corresponds[19] a definite average effective electron temperature, it is possible to choose conditions in which various specific energy levels of the working medium are excited with maximum efficiency.[6,11-14] Electrons hardly ever penetrate the vibrational-level energy barrier in excited molecular gases such as CO_2, CO, or N_2, whose maximum cross section $\sigma v = 10^{-15}$ cm^2 for excitation of the molecule vibrations lies in the range 1–2 eV and decreases steeply with increasing or decreasing electron energy. In inelastic collisions of electrons with molecules, up to 98% of the energy (Fig. 11) goes in this case to excitation of vibrations, the electronic levels remain practically unexcited, and no self-sustained ionization takes place in an electric field. In this situation, the discharge is stable up to ≈ 100 atm pressure[6,12] and in volumes up to hundreds of liters.

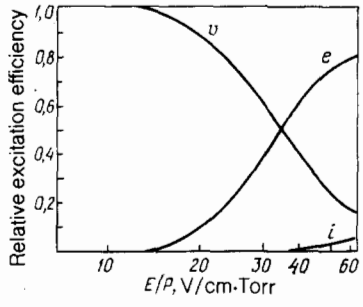

FIG. 11. Relative efficiency of exciting the nitrogen molecule N_2 in an electric discharge at various values of the parameter E/P.[14] v—Relative electron-energy fraction going to excitation of vibrations in inelastic collisions of electrons with the molecule; e—energy fraction transferred to the electronic levels; i—energy fraction going to ionization of the molecules.

When electronic levels are excited by an EBC discharge, say in excimer laser media,[6,11] the average electron energy is substantially higher than in $CO-CO_2$ lasers, and the ionizing collisions assume a rather significant role. Under these conditions it becomes necessary to increase greatly the degree of external ionization of the medium, and the energy fraction that goes to this ionization is a significant part of the total pump energy (up to 30%).[6,36,37] The lower power of the ionizer used for EBC pumping of lasers on electronic transitions of compressed gases permits a substantial simplification of the accelerating section of the apparatus, and decreases the thermal stress in the foil.

3. EXCIMER LASERS

The most powerful and effective sources of coherent radiation in the ultraviolet and in the vacuum ultraviolet at the present time are excimer lasers.

The working medium of an excimer laser is a mixture of high-pressure gases (the pressure exceeds atmospheric, as a rule). The main component of the mixture (90% of its volume) must be inert-gas atoms.[3)] Inert-gas atoms have closed electron shells and therefore do not form molecules in the electronic ground state. In an excited electronic state, however, a strong chemical bond is formed, with a binding potential in the range from 0.5 to 2 eV. Such a molecule, stable in the excited electronic state and unstable in the ground state, is called an excimer molecule. Excimer molecules have a number of unique properties, viz., a highly high luminescence quantum efficiency 50–70%, no absorption of the intrinsic radiation at the luminescence wavelength, a large emitted-photon energy, ability to preserve the radiating properties up to very high (tens of atmospheres) pressures of the working medium, and the ability of realizing a four-level laser scheme. These properties of excimer laser media make possible the construction of a large class of lasers for the ultraviolet and vacuum-ultraviolet bands, with $\approx 10\%$ efficiency and exceedingly high pulsed radiation power and energy. The average radiation power at high repetition frequencies is also high.

The first to report the feasibility, in principle, of constructing lasers based on electronic transitions of molecules from a stable state to an unstable ground state was F. G. Houtermans[38] in 1960. He analyzed in detail a laser on bound-free electronic transitions in the hydrogen molecule. In the same article, Houtermans suggested that inert gases are promising laser media. His paper, published even before the development of first ruby and helium-neon lasers, preceded by 10 years the advent of the first xenon-dimer excimer laser.[6–8]

3.1. Excimer lasers operating on inert-gas dimers

The fundamental property of inert gases, which distinguishes them from other gaseous media, is that they are atomic. For this reason, any electronic excitation or ionization process, accompanied by subsequent relaxation of the excitation, has practically none of the nonradiative relaxation channels typical of many molecular gases. This property of inert gases becomes most pronounced at high (above 1 atm) pressures and in the condensed state, when rapid relaxation of the excited electronic state of the molecules via collisional energy exchange and subsequent vibrational relaxation of the excitation weakens the optical radiation of other molecular gaseous media.

Inert gases are the most effective sources of nonequilibrium optical radiation in the visible, ultraviolet, and vacuum-ultraviolet bands.

Low-pressure inert gases ($P < 10^{-3}$ atm) are characterized by atomic emission line spectra, but at high pressures (0.5 atm and above) the line radiation vanishes completely (except in the visible and infrared), and molecular ultraviolet radiation of the inert-gas excimers appears. With increasing pressure and in the condensed state, the inert gases, as gaseous luminors, preserve an unusually high luminescence efficiency in the range 50–70%. Addition of molecular impurities to compressed inert gases quenches completely the luminescence of inert-gas excimers.[6] At low impurity concentrations, less than 1%, excited inert gas transfer effectively the excitation energy both to the impurity molecules and to short-lived derivative molecules produced via excited chemically active states of the inert gas with participation of the molecular-impurity atom, followed by effective luminescence, but now via decay of the new, artificially produced excimer. These excimers derived from inert-gas atoms and molecular-impurity atoms emit in the ultraviolet and visible bands. The emitting particles in excimer laser media are either inert-gas excimers or a derived excimers consisting of an inert-gas atoms and molecular-impurity atoms. In essence, a small molecular additive in a compressed inert gas is an effective internal converter of the vacuum ultraviolet radiation of atoms and inert-gas excimers into near-ultraviolet and visible radiation of the derivative excimers and impurity molecules.

In his paper on the helium continuum, Y. Tanaka[39] published for the first time the scheme of optical transitions in an excimer He_2 molecule from a stable excited electronic state into a repulsive ground state. Tanaka used this scheme to explain the vacuum ultraviolet continuum from a condensed discharge in high-pressure helium. The exceptionally high ($>50\%$) luminescence efficiency of compressed inert gas in the vacuum ultraviolet (VUV) region of the spectrum, due to emission by excimers of inert gases excited by a condensed discharge or by high-energy particles,[40] led to extensive use of inert gases as VUV radiation sources[41,42] and as the working medium for charged-particle scintillation counters.

In 1966, N. G. Basov proposed the use of inert gases as media for electron-pumped ultraviolet lasers. In 1967, A. G. Molchanov, I. A. Poluéktov, and Yu. M. Popov formulated the threshold generation conditions for lasers using inert-gas crystals.[44] Experimental research, at FIAN, into the luminescence of inert gases in the gaseous, liquid, and solid states[4,5,6,45–47] and pumped by a high-power electron beam has shown that "emission from compressed and condensed Xe, Kr, Ar and their mixtures, regardless of their aggregate state, is effected via formation and subsequent radiative decay of diatomic excimer molecules."[6,8,45–47]

The following generalized scheme of the formation and

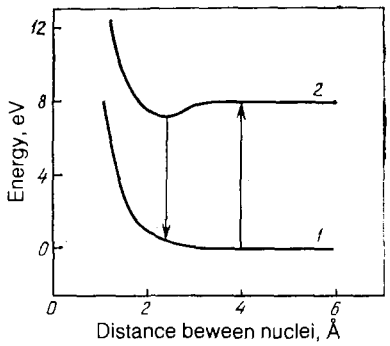

FIG. 12. Scheme of optical transitions in the excimer molecule Xe_2^* (Ref. 8). 1) Ground state, 2) excited state.

radiative decay of an excimer molecule was published in Refs. 8 and 46:

$$A + A + W \rightarrow A_2^* \rightarrow A + A + h\nu + Nh\nu_s, \qquad (9)$$

where A is the atom in the ground electronic state, W the excitation energy, A_2^* the excited diatomic molecule (excimer), $h\nu$ the energy of the emitted photon, and $Nh\nu_s$ the energy of the translational motion of the atoms that repel one another in the electronic ground state.

The corresponding scheme of laser optical transitions in an excimer molecule was first published in 1970 in the papers by N. G. Basov *et al.*[8,46,47] (Fig. 12). Let us examine some of the basic features of this scheme.

The feasibility of a four-level condensed-inert-gas laser was first considered in 1969.[45]

The gain for a four-level laser system was written in accordance with Refs. 5, 8, and 45 in the form

$$\alpha = \frac{1}{8\pi} \frac{\lambda^2 W_3^R}{\Delta\nu} N_c, \qquad (10)$$

where λ is the radiation wavelength, $W_3^R = 1/\tau_{sp}$ is the radiative spontaneous transition probability, and N_c is the concentration of the particles in the excited state. The condition for reaching the lasing threshold in an optical Fabry-Perot interferometer with mirror reflectances R_1 and R_2, active-region length L, and nonresonant losses K over the lasing wavelength, namely,

$$R_1 R_2 \exp[2(\alpha - K)L] = 1 \qquad (11)$$

has made it possible to determine the minimum concentration $N_c \approx 10^{16}$ cm^{-3} of the excited particles as well as the threshold density of the electron beam that produces this concentration of excited particles. The threshold current density, assuming that the nonresonant loss K is determined by photoionization of the excited level, turned out to be $j_{thr} \approx 20$ A/cm^2.

The first successful experiments that demonstrated the luminescence-line narrowing and the appearance of radiation directivity when the electron-beam threshold density is exceeded were published in Ref. 5. The apparatus used for the experiments is illustrated in Fig. 3. The working medium was liquid xenon.

Lasing on the Xe_2^* excimer (see Fig. 12) was achieved in 1970 with the apparatus shown in Fig. 13.[6,9]

"The optical cell in which the liquid xenon was condensed was made of stainless steel. It was cooled by a cold finger passing through the central part of the cell (see Fig. 13). The cold finger was cooled by liquid nitrogen in a cryostat located below the cell. Semitransparent aluminum mirrors sputtered on lithium-fluoride substrates were used. Immediately after the sputtering, each mirror was covered with a protective coating of magnesium fluoride. The mirror transmission at 1700 Å wavelength was 1–2%, and the reflection coefficient 50–60%. The equivalent absorption coefficient introduced by the mirrors and the cavity was thus 0.5 cm^{-1} and lasing was expected at a gain ≈ 1 cm^{-1}.

The radiation was recorded with a vacuum spectrometer of the Seiya-Namioka type, having a 1200 lines/mm grating and a photomultiplier whose entrance window was coated with sodium salycilate. In addition to recording the spectra, the radiation was recorded with a vacuum photodiode having a high temporal resolution; in addition, the screen on which the radiation from the optical cell was projected was photographed. The radiation-pulse waveform and duration agreed with those of the electron-current pulse.

No bright spot appeared on the luminescent screen at current densities higher than 100 A/cm^2, and the luminescence linewidth in the emission spectra was sharply decreased, thus attesting to the onset of stimulated emission. From the size of the spot on the luminescence screen located 40 mm from the cell mirror it was possible to estimate the beam divergence, which amounted to 7°. This is much larger than the calculated diffractive divergence, apparently because of the multimode character of the radiation and the inhomogeneous excitation of the liquid xenon by the electron beam.

The dependence of the 1700-Å line intensity on the current density leads to an estimate $\approx$30–50 A/cm^2 for the threshold current density."

Figure 14 shows the following: a photograph of the luminescent-screen emission induced by the VUV emission of the liquid-xenon laser (a), the emission from a thin layer of

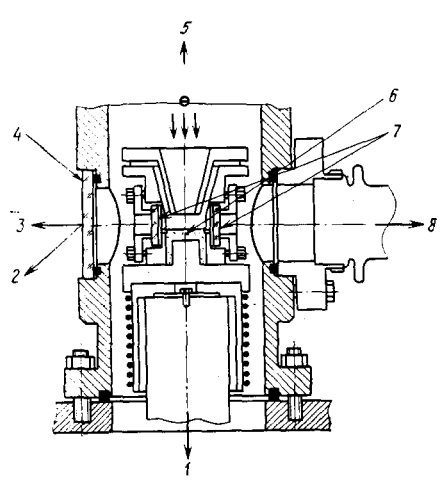

FIG. 13. Diagram of experimental setup used to obtain lasing in liquid and gaseous xenon on Xe_2^* excimers.[8] 1—Cryostat, 2—photographic camera, 3—photodiode, 4—luminescent screen, 5—electron gun, 6—liquid xenon, 7—mirror, 8—vacuum spectrometer.

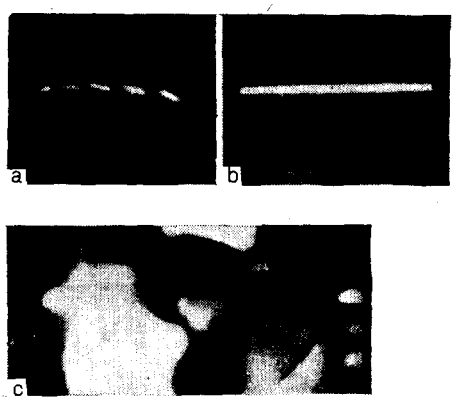

FIG. 14. Photographs of the luminescent-screen emission induced by the beam of a liquid-xenon beam (a), of the emission from a thin layer of liquid xenon activated by the electron beam (b), and of the laser-cavity mirror burned by the laser radiation (c).[6]

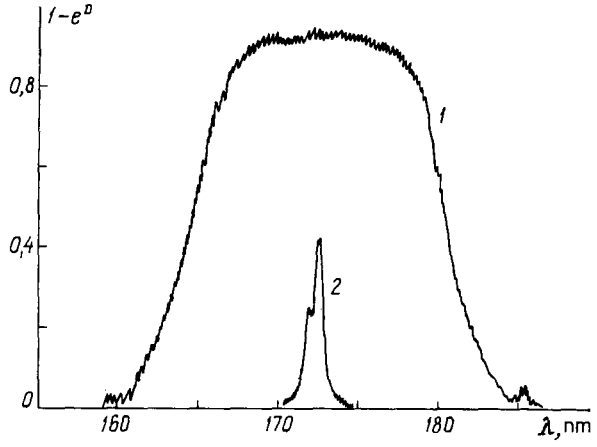

FIG. 15. Spectra of spontaneous and laser emissions of an Xe_2^*-molecule excimer laser. The laser-line intensity is reduced by a factor 500. D is the photographic density of the film.

liquid xenon by the action of the electron beam (b), and a photograph of the laser-cavity exit mirror that was burned in the region of the laser beam (c).

Figure 15 shows the spectra of the spontaneous (thick trace 1) and stimulated (thin trace 2) emission of an Xe_2^* excimer laser. The intensity of the laser line is reduced by a factor 500.

Experiments with liquid xenon revealed also lasing from gas cooled to 165 K, compressed to 2–3 atm, and located above the liquid surface.[6,95,111] The optical endurance of the sputtered-aluminum mirrors was not high enough, so that lasing could be observed only at a slight excess above threshold, for otherwise the mirrors were burned by the very first laser pulse. The total lasing energy achieved was 0.2 J, corresponding to an energy density ≈ 0.07 J/cm^3 in the gas and up to 10 J/m^3 in the liquid.

Since the repulsive lower laser state of the Xe_2^* excimer is practically unpopulated at low temperatures, population inversion can be reached at rather low pump density. It seems feasible therefore to produce a quasicontinuous laser using cooled or liquefied inert gases, with lasing pulse up to several times 10 μs (Ref. 6), pumped either by an electron beam or by x rays capable of exciting appreciable volumes of the working medium.

The high rate of excitation transfer from light inert gases to heavy ones, including liquefied ones,[6,45] facilitates the transition to long excitation pulses for two-component mixtures. The high cathodoluminescence efficiency (up to 50%) of compressed and liquefied inert gases permits their use as incoherent but sufficiently narrow-band sources, both as pumps for other lasers, e.g., based on photodissociation of XeF_2 molecules,[48] and as VUV lamps for photochemistry and other commerical applications.

To conclude this section, we present the energy-conversion scheme in a mixture of compressed Ar and Xe excited by an electron beam (Fig. 16), in accordance with the contemporary premises that stem from the results of Refs. 6 and 49–60.

Two years after the publication of Soviet papers,[5–8] Xe_2^* excimer lasers with compressed xenon pumped by an electron beam were set in operation in the USA almost simultaneously in a large number of laboratories.[54–60] These investigations, as well as Refs. 5–8 and the classical paper by R. Mulliken,[64] led to the following scheme of the kinetic processes in a compressed-xenon excimer laser, in the form of the following chain of reactions[16,50–53,61,63,78]

$$
\begin{aligned}
&\mathrm{Ar}+\mathrm{e}\to \mathrm{Ar}^++2\mathrm{e}_1 && (k_i)_{\mathrm{Ar}},\\
&\mathrm{Ar}+\mathrm{e}\to \mathrm{Ar}^*+\mathrm{e}_1 && (k^*)_{\mathrm{Ar}},\\
&\mathrm{Xe}+\mathrm{e}\to \mathrm{Xe}^++2\mathrm{e}_1 && (k_i)_{\mathrm{Xe}},\\
&\mathrm{Xe}+\mathrm{e}\to \mathrm{Xe}^*+\mathrm{e}_1 && (k^*)_{\mathrm{Xe}},\\
&\mathrm{Ar}^++2\mathrm{Ar}\to \mathrm{Ar}_2^++\mathrm{Ar}, && 2{,}1\cdot 10^{-31}\,\mathrm{cm}^6/\mathrm{s},\\
&\mathrm{Ar}^++\mathrm{Xe}\to \mathrm{Xe}^++\mathrm{Ar}, && 10^{-11}\,\mathrm{cm}^3/\mathrm{s},\\
&\mathrm{Ar}^*+2\mathrm{Ar}\to \mathrm{Ar}_2^*+\mathrm{Ar}, && 10^{-32}\,\mathrm{cm}^6/\mathrm{s},\\
&\mathrm{Ar}^*+\mathrm{Xe}\to \mathrm{Xe}^*+\mathrm{Ar}, && (1{,}8-3)\cdot 10^{-10}\,\mathrm{cm}^3/\mathrm{s},\\
&\mathrm{Ar}_2^++\mathrm{e}^-\to \mathrm{Ar}^*+\mathrm{Ar}, && 5\cdot 10^{-7}\,\mathrm{cm}^3/\mathrm{s},\\
&\mathrm{Ar}_2^++\mathrm{Xe}\to \mathrm{Ar}\,\mathrm{Xe}^++\mathrm{Ar}, && 2\cdot 10^{-10}\,\mathrm{cm}^3/\mathrm{s},\\
&\mathrm{Ar}_2^++\mathrm{Xe}\to \mathrm{Xe}^++2\mathrm{Ar}, && 5\cdot 10^{-10}\,\mathrm{cm}^3/\mathrm{s},\\
&\mathrm{Ar}_2^*+\mathrm{Xe}\to \mathrm{Xe}^*+2\mathrm{Ar}, && 4{,}4\cdot 10^{-10}\,\mathrm{cm}^3/\mathrm{s},\\
&\mathrm{Ar}_2^*+\mathrm{Xe}\to \mathrm{Ar}\,\mathrm{Xe}^*+\mathrm{Ar}, && 8\cdot 10^{-11}\,\mathrm{cm}^3/\mathrm{s},\\
&\mathrm{Xe}^++\mathrm{Xe}+\mathrm{Ar}\to \mathrm{Xe}_2^++\mathrm{Ar}, && 3\cdot 10^{-31}\,\mathrm{cm}^6/\mathrm{s},\\
&\mathrm{Xe}^++2\mathrm{Ar}\to \mathrm{Ar}\,\mathrm{Xe}^++\mathrm{Ar}, && 2\cdot 10^{-31}\,\mathrm{cm}^6/\mathrm{s},\\
&\mathrm{Ar}\mathrm{Xe}^++\mathrm{e}^-\to \mathrm{Xe}^*+\mathrm{Ar}, && 4\cdot 10^{-7}\,\mathrm{cm}^3/\mathrm{s},\\
&\mathrm{Ar}\,\mathrm{Xe}^++\mathrm{Xe}\to \mathrm{Xe}_2^++\mathrm{Ar}, && 10^{-10}\,\mathrm{cm}^3/\mathrm{s},\\
&\mathrm{Xe}_2^++\mathrm{e}^-\to \mathrm{Xe}^*+\mathrm{Xe}, && 1{,}8\cdot 10^{-7}\,\mathrm{cm}^3/\mathrm{s},\\
&\mathrm{Xe}^*+2\mathrm{Xe}\to \mathrm{Xe}_2^*+\mathrm{Xe}, && 2{,}5\cdot 10^{-32}\,\mathrm{cm}^6/\mathrm{s},\\
&\mathrm{Xe}^*+\mathrm{Xe}+\mathrm{Ar}\to \mathrm{Xe}_2^*+\mathrm{Ar}, && 2\cdot 10^{-32}\,\mathrm{cm}^6/\mathrm{s},\\
&\mathrm{Xe}^*+2\mathrm{Ar}\to \mathrm{Ar}\,\mathrm{Xe}^*+\mathrm{Ar}, && 10^{-33}\,\mathrm{cm}^6/\mathrm{s},\\
&\mathrm{Xe}_2^*(1_\mathrm{u},\,0_\mathrm{u}^-)\to \mathrm{Xe}+\mathrm{Xe}+h\nu_{172\,\mathrm{nm}}, && \tau\approx 10^{-7}\ \mathrm{s},\\
&\mathrm{Xe}_2^*(0_\mathrm{u}^+)\to \mathrm{Xe}+\mathrm{Xe}+h\nu_{172\,\mathrm{nm}}, && 6\cdot 10^{-9}\ \mathrm{s},\\
&\mathrm{Ar}_2^*(1_\mathrm{u},\,0_\mathrm{u}^-)\to \mathrm{Ar}+\mathrm{Ar}+h\nu_{126\,\mathrm{nm}}, && \tau\approx 4\cdot 10^{-6}\ \mathrm{s},\\
&\mathrm{Ar}_2^*(0_\mathrm{u}^+)\to \mathrm{Ar}+\mathrm{Ar}+h\nu_{126\,\mathrm{nm}}, && \tau\approx 5\cdot 10^{-9}\ \mathrm{s},\\
&\mathrm{Xe}_2^*+h\nu_{172\,\mathrm{nm}}\to \mathrm{Xe}_2^++\mathrm{e}^-, && \sigma\approx 2\cdot 10^{-18}\,\mathrm{cm}^2,\\
&\mathrm{Ar}_2^*+h\nu_{126\,\mathrm{nm}}\to \mathrm{Ar}_2^++\mathrm{e}^-, && \sigma\approx 10^{-18}\,\mathrm{cm}^2,\\
&\left.\begin{aligned}\mathrm{Ar}^*&\to \mathrm{Ar}+h\nu,\\ \mathrm{Xe}^*&\to \mathrm{Xe}+h\nu,\end{aligned}\right\} && \tau\gtrsim 10^{-6}\ \mathrm{s}.
\end{aligned}
\qquad (12)
$$

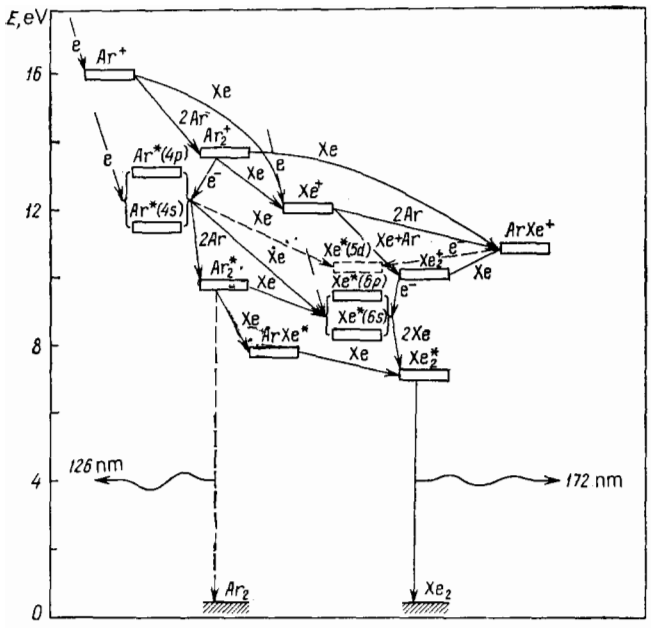

FIG. 16. Scheme of kinetic processes in an Xe_2^* excimer laser in which an Ar:Xe mixture is excited by an electron beam.

The initial excitation stage of the Xe:Ar-mixture laser is determined by the first four reactions of ionization and excitation of the Ar and Xe atoms by a beam of accelerated electrons. According to Eq. (3), the quantity

$$(k_1)_{\mathrm{Ar}} = \frac{1}{w_e}\left(\frac{dE}{dx}\right)_{\mathrm{Ar}} \frac{j_e}{e} \tag{13}$$

determines the rate of the basic channels through which energy is fed from the external electron beam into the gas medium. We have $k^* \approx k_1/3$ and on the whole more than 50% of the electron-beam energy is transformed into the energy of the excited atoms Ar* and Xe*. The most typical processes that determine the main and principal feature of the Xe_2^* excimer laser excitation, and in general of all other excimer lasers in which, as a rule, the main component is compressed argon, are ternary collisions that form the ionic molecules

$$Ar_2^+, \quad Ar\,Xe^+, \quad Xe_2^+$$

and the excimer molecules

$$Ar_2^*, \quad Ar\,Xe^*, \quad Xe_2^*.$$

The efficiency with which energy is transfered from the excited atoms Ar* and Xe* and from the molecules Ar_2^+, Ar_2^*, $ArXe^+$, ArXe* to the excimer molecule Xe_2^* is so high, that when the Xe:Ar mixture is excited by an electron beam the efficiency with which the Xe_2^* molecule emits at a wavelength $\lambda = 173$ nm is close to the quantum efficiency of the excimer scheme itself (see Fig. 12). As shown in Refs. 6 and 45–47, about 50% of the electron-beam energy is converted into spontaneous emission of the Xe_2^* molecules.

Electron-beam control (EBC) excitation was first proposed for excimer lasers operating on compressed inert gases and their mixtures in Refs. 6 and 11–14, and first implemented in Ref. 36. It makes use of the fact (see Fig. 10) that inert gases have no energy barrier (ε_v) for vibrational levels to hinder the pumping of electronic levels (ε_e) by electrons accelerated in the external electric field of the electroionization discharge.

However, the appreciable penetration of "hot" electrons into the region of ionization of the atoms and excimers (ε_i) lowers drastically the stability of the electroionization discharge. It becomes necessary therefore to increase the electron-beam intensity, thereby making quite appreciable its contribution (up to 30%) to the overall pump-energy balance.

Depending on the length of the active medium, both for pure beam pumping and for electron-beam controlled pumping, there exists a minimum excitation power at which lasing is reached. To satisfy the condition $\alpha L \approx 1$, which means on exit-mirror transmission coefficient $T \approx 60\%$, xenon-laser operation requires at various pump durations, the excitation powers listed in Table III in accordance with Eqs. (4) and (10).

Be decreasing the stationary excimer density while increasing the length of the active medium, it is possible to lower the loss due to photoionization of the excimers by their own radiation, one of the most harmful processes that restrict the laser efficiency, which approaches the luminescence efficiency ($\approx 50\%$).

Increasing the laser length, however, makes much more stringent the requirements imposed on the purity of the initial working gases. The content of molecular-gas impurities, such as N_2, O_2, H_2O and others, must in this case be lowered to $\approx 10^{-5}$–$10^{-6}\%$. One of the simplest methods of realizing in practice a quasicontinuous excimer laser on Xe_2^* dimers is to use EBC pumping of the Xe:Ar mixture at an excitation duration $\approx (2\text{–}3)\cdot 10^{-6}$ s (this procedure was considered in Ref. 6).

Finally, when EBC pumping is used for excimer lasers, the harmful process of photoionization of the excimers by their own radiation can be used to lower the density of the electron-beam current.[65,66] If an electron in an EBC discharge excites so many atoms and molecules during its lifetime that their photoionization by the laser-emission photons produces no less than one electron, the discharge that excites the layer can be sustained also without an external ionization source and without self-sustained ionization of the active medium by the discharge electrons. This effect should play a significant role in excimer lasers having a long active medium, a prolonged excitation duration, and a low intensity of the external ionizer.

TABLE III. Relations between the pump power, the gain, and the length of the active medium for an Xe_2^* dimer laser.

Pump duration, s	Active-medium length, cm	Specific pump power, W/cm³	Gain, cm⁻¹	Electron-current density, A/cm²	Excimer density, cm⁻³
10^{-8}	10	10^7	10^{-1}	10^3	10^{16}
10^{-7}	10^2	10^6	10^{-2}	10^2	10^{15}
10^{-6}	10^3	10^5	10^{-3}	10	10^{14}

TABLE IV. Lasing wavelength and radiative lifetimes of excimer molecules of inert-atom halides.

Excimer	Lasing wavelength, nm	Radiative lifetime, ns	Excimer	Lasing wavelength, nm	Radiative lifetime, ns
Ar_2^*	126	5	XeF*(B→X)	351	16
Kr_2^*	147	6	XeF*(C→A)	510	100
Xe_2^*	172	6	XeO*	540	200
ArF*	193	4	KrO*	558	1000
KrCl*	222	19	Ar_2F^*	290	180
KrF*	248	8	Kr_2F^*	420	170
XeBr*	282	15	Xe_2F^*	550	150
XeCl*	308	11	HgBr*	510	24

3.2. Excimer lasers operating on inert-gas halides

The search for new excimer laser media based on derivative excimers obtained by adding to compressed inert gases small amounts of molecular impurity, led to the discovery of a new class of dimers, RX*, in which R is a noble-gas atom and X is a halogen atom.[67–77] The emission of these molecules is due to a transition from a bound excited state of the RX* molecule to a repulsive or weakly bound ground state, produced from a combination of the inert-gas atom in the $^1S_0$ state with a halogen atom in a state $^2P_{3/2}$ or $^2P_{1/2}$. In the first laser of this type (the lasing was obtained by exciting an $Xe:Br_2$ with an electron beam) was reported in Ref. 73. Lasing was subsequently obtained also in a large number of mixtures of noble gases with halogens.[74–77] Table IV lists the lasing wavelengths of the principal excimer lasers.

Detailed data on the listed excimer molecules and on the lasers in which they are used can be found in review papers.[15,52,61,78]

The highest power and energy (more than 1 kJ) were attained to date with the excimers KrF* and XeF* (Refs. 79, 80). Experiments on KrF* and XeF* excimer lasers carried out in 1975–1978 at FIAN[81–84] and independently in the USA[85,89] have revealed the existence of the ternary excimers Kr_2F and Xe_2F. Electron-beam excitation[83,84] of the mixtures $Ar:F_2$, $Ar:Kr:F_2$, and $Kr:Xe:F_2$ in a wide range of pressures (0.5–20 atm) and temperatures (150–500 K) has revealed that the variation of the temperature and pressure in the indicated ranges results in a substantial redistribution of the energy among the diatomic and triatomic excimers. These investigations have made it possible to determine the optimal conditions for lasing on KrF and XeF excimers with maximum efficiency, viz., the optimal temperature is $T_{opt} \approx 400$ K and the range of optimal pressures P_{opt} is 1.5 to 3 atm.

At temperatures $T < 400$ K and pressures $P > 3$ atm the efficiency of binary excimer lasing decreases and the energy is redistributed into channels for formation of ternary excimers.

Ternary-excimer lasing efficiency, however, is low, inasmuch as the absorption of ternary-excimer radiation by the ions F^-, F_2^-, and R_2^+ and by the molecules F_2 and R_2^* is large at high pressures, and the wide ternary-excimer gain bands and the small induced-transition cross section (see

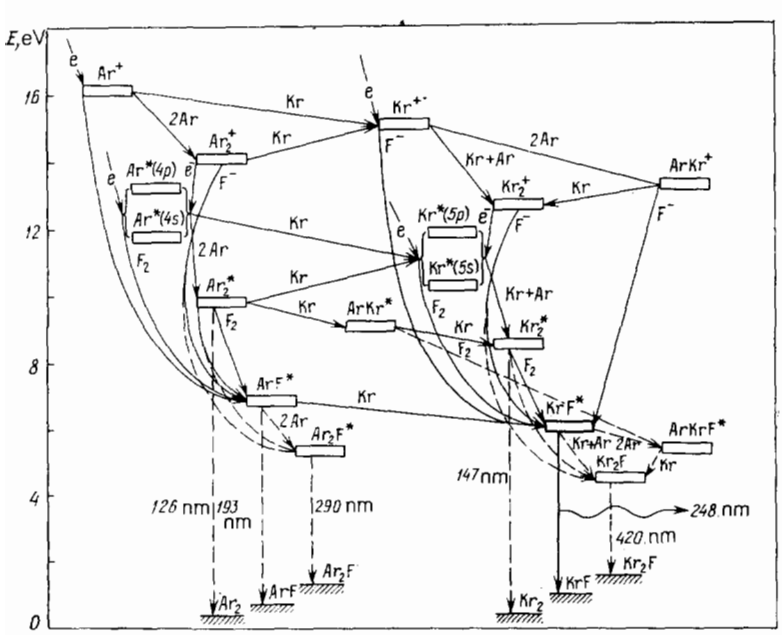

FIG. 17. Kinetic processes in an excimer KrF laser with electron-beam excited $Ar:Kr:F_2$ mixture.

TABLE V. Cross section for photoabsorption in inert-gas halide plasma.

RX	λ, nm	$\sigma(X_2)$, cm^2	$\sigma(X^-)$, cm^2	$\sigma(R^*)$, cm^2	$\sigma(R_2^*)$, cm^2
XeCl	308	$1.7\cdot10^{-19}$	$2.2\cdot10^{-17}$		$1.6\cdot10^{-17}$
XeF	351	$6.6\cdot10^{-21}$	$2\cdot10^{-18}$		$4.8\cdot10^{-17}$
KrF	248	$1.5\cdot10^{-20}$	$5.5\cdot10^{-18}$	$4\cdot10^{-18}$	$3\cdot10^{-18}$
ArF	193		$9.3\cdot10^{-18}$	$3\cdot10^{-18}$	$4\cdot10^{-18}$

Table IV) prevent sufficiently high gains.

In view of the discovery of ternary excimers[83,89] and the investigations of the kinetics of lasing in mixtures of inert gases with halogens,[82,90] the kinetic lasing scheme in the most efficient KrF excimer laser can be written in the form of the following chains of reactions (Fig. 17):

$$
\begin{aligned}
&F_2 + e \to F^- + F, && 10^{-7}\,\text{cm}^3/\text{s},\\
&Ar^+ + Kr \to Kr^+ + Ar, && 10^{-11}\,\text{cm}^3/\text{s},\\
&Ar^+ + 2Ar \to Ar_2^+ + Ar, && 2\cdot10^{-31}\,\text{cm}^6/\text{s},\\
&Ar^+ + F^- \to ArF^*, && 10^{-6}\,\text{cm}^3/\text{s},\\
&Ar_2^+ + e \to Ar^* + Ar, && 7{,}5\cdot10^{-7}\,\text{cm}^3/\text{s},\\
&Ar_2^+ + Kr \to Kr^+ + 2Ar, && 7{,}5\cdot10^{-10}\,\text{cm}^3/\text{s},\\
&Ar^+ + F^- \to ArF^* + Ar, && 10^{-8}\,\text{cm}^3/\text{s},\\
&Ar^* + Kr \to Kr^* + Ar, && 6\cdot10^{-12}\,\text{cm}^3/\text{s},\\
&Ar^* + F_2 \to ArF^* + F, && 7{,}5\cdot10^{-10}\,\text{cm}^3/\text{s},\\
&Ar^* + 2Ar \to Ar_2^* + Ar, && 10^{-32}\,\text{cm}^6/\text{s},\\
&Ar^* \to h\nu + Ar + Ar \begin{cases} (1_u,\ 0_u^-), & \tau \approx 3{,}6\cdot10^{-8}\ \text{s},\\ (0_u^+), & \tau \approx 5\cdot10^{-9}\ \text{s},\end{cases}\\
&Ar^* \to h\nu + Ar, \quad \tau \gtrsim 10^{-8}\ \text{s},\\
&Ar_2^* + Kr \to Kr^* + 2Ar, && 8\cdot10^{-11}\,\text{cm}^3/\text{s},\\
&ArF^* + Kr \to KrF^* + Ar, && 1{,}5\cdot10^{-10}\,\text{cm}^3/\text{s},\\
&Kr^* + F_2 \to KrF^* + F, && 7{,}2\cdot10^{-10}\,\text{cm}^3/\text{s},\\
&Kr^+ + F^- \to KrF^*, && 2\cdot10^{-6}\,\text{cm}^3/\text{s},\\
&Kr_2^+ + F^- \to KrF^* + Kr, && 3\cdot10^{-8}\,\text{cm}^3/\text{s},\\
&ArKr^+ + F^- \to KrF^* + Ar, && 10^{-6}\,\text{cm}^3/\text{s},\\
&Kr_2^+ + e^- \to Kr^* + Kr, && 10^{-8}\,\text{cm}^3/\text{s},\\
&Kr^+ + Kr + Ar \to Kr_2^+ + Ar, && 2.5\cdot10^{-31}\,\text{cm}^6/\text{s},\\
&Kr^+ + 2Ar \to ArKr^+ + Ar, && 10^{-31}\,\text{cm}^6/\text{s},\\
&ArF^* \to h\nu + ArF, && \tau \approx 4\cdot10^{-9}\ \text{s},\\
&Ar_2F^* \to h\nu + Ar_2F, && \tau \approx 1{,}8\cdot10^{-7}\ \text{s},\\
&Kr^* + 2Ar \to ArKr^* + Ar, && 10^{-32}\,\text{cm}^6/\text{s},\\
&Kr^* + Kr + Ar \to Kr_2^* + Ar, && 5\cdot10^{-32}\,\text{cm}^6/\text{s},\\
&Kr^* + 2Kr \to Kr_2^* + Kr, && 3\cdot10^{-32}\,\text{cm}^6/\text{s},\\
&Kr_2^* + F_2 \to Kr_2F^* + F, && 3\cdot10^{-10}\,\text{cm}^3/\text{s},\\
&Kr_2^* \to h\nu + Kr + Kr \begin{cases} (1_u,\ 0_u^-), & \tau \approx 3\cdot10^{-7}\ \text{s}\\ (0_u^+), & \tau \approx 6\cdot10^{-9}\ \text{s},\end{cases}\\
&Kr_2F^* \to h\nu + Kr + F + Kr, && \tau \approx 1.7\cdot10^{-7}\ \text{s},\\
&KrF^* \to h\nu + Kr + F, && \tau \approx 8\cdot10^{-9}\ \text{s},\\
&KrF^* + 2Ar \to ArKrF^* + Ar, && 4\cdot10^{-33}\,\text{cm}^6/\text{s},\\
&ArKrF^* + Kr \to Kr_2F^* + Ar, && 10^{-10}\,\text{cm}^3/\text{s},\\
&ArKr^* + F_2 \to KrF^* + Ar + F, && 6\cdot10^{-10}\,\text{cm}^3/\text{s},\\
&Ar_2^* + F_2 \to Ar_2F + F, && 2.5\cdot10^{-10}\,\text{cm}^3/\text{s},\\
&Ar_2^* + Kr \to Kr^* + 2Ar, && 8\cdot10^{-11}\,\text{cm}^3/\text{s}.
\end{aligned}
\tag{14}
$$

The most pronounced feature of the kinetics of KrF* excimer formation, just as in the case of Xe_2^* excimer lasers (see Fig. 16), is the decisive role of ternary collisions with participation of atoms and ions of the inert gases that comprise the bulk of the laser mixture. The KrF*-laser mixture composition, which is typical also of other inert-gas halides, and at which a maximum efficiency $\approx 15\%$ and maximum energy are obtained, is

$$\text{Ar} : \text{Kr} : \text{NF}_3 = 1000 : 100 : 1 \tag{15}$$

at a total pressure ≈ 2 atm.

Thus, the concentration of the halogen-containing molecules that supply the halogen atom to the mixed excimer turns out to be $\approx 0.1\%$ for the optimal mixtures. As shown in Refs. 49, 50, and 81–89, the optimal pressure range 1.5–3 atm for inert-gas halide lasers is determined by a competition between two processes. The ternary-collision mechanism, which supplies the excitation energy and produces in fact the RX* excimers, is inoperative at low pressures, while at pressures higher than 3–5 atm, especially in large-volume lasers and at high specific pump powers, absorption of the intrinsic laser radiation by excited and unexcited particles begins to manifest itself on top of the quenching ternary collisions with formation of the ternary excimers.

We list in Table V the cross sections, according to Ref. 16, for photoabsorption in a plasma of halide inert gases RX.

Parasitic absorption in excimer-laser plasma requires that the working gases (RX) be strongly diluted by a light buffer gas, usually argon, and that the specific laser-excitation power be lowered. The minimum pump power needed to reach a specified gain α is given by

$$P_{\min} = \frac{\alpha \omega_e^*}{\pi \sigma_{st} \tau}, \tag{16}$$

where w_e^* is the energy needed to produce one initial excited inert-gas atom, η is the fraction of inert-gas atoms that transfer energy to the RX* excimer (usually $\eta \approx 0.5$), τ is the radiative lifetime of the RX* excimer, and σ_{st} is the stimulated-emission cross section. Typical values are

$$
\left.
\begin{aligned}
&\sigma_{st} \approx 10^{-16}\ \text{cm}^2 \quad (\text{case} \quad \text{KrF}^*),\\
&\alpha \approx 10^{-2}\ \text{cm}^{-1},\\
&\frac{w_e^*}{\eta} \approx 50\ \text{eV},\\
&P_{\min} \approx 10^5\ \text{W/cm}^3.
\end{aligned}
\right\}
\tag{17}
$$

The only radical ways of lowering the losses to photoabsorption are to lower the pump power and thus inevitably lower the gain α of the active medium, or increase the total length of the active medium, and increase the pump duration to $\tau_p \approx 10^{-6}$ s, meaning a transition to a quasicontinuous regime. Calculations performed at FIAN[91] yield the optimal parameters of one KrF* excimer amplifier module for laser-driven nuclear fusion purposes (Table VI).

TABLE VI. Parameters of output excimer amplifier.

Aperture	2×2 m^2	Composition of Ar:Kr:F_2 mixture	937:60:3
Active-medium length	3 m	Pressure	1 atm
Output-energy density	4 J/cm^2	Energy gain	15–20
Efficiency	10%		
Pump duration	$0.4\cdot10^{-6}$ s	Output energy	150 kJ

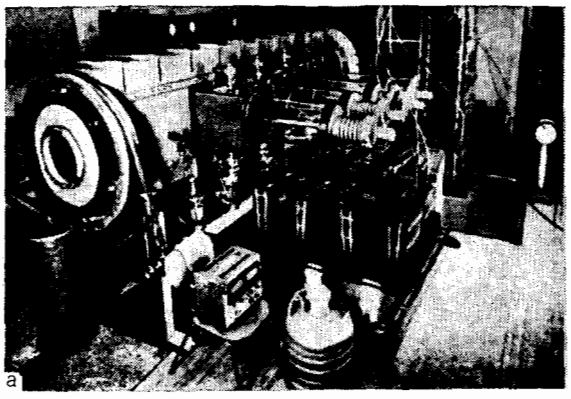

a

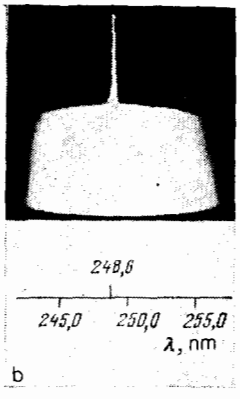

b

FIG. 18. a) Excimer laser with modular electron guns and with active-medium volume $V = 40$ liters, b) Typical spectra of stimulated and spontaneous emission of KrF laser.

It appears that the maximum energy that can be obtained in one KrF excimer-laser module is ≈ 1 MJ. In this review we do not deal with the physics and technology of exciting low-power electric-discharge excimer lasers (see Refs. 16, 61, 62, 78).

The EBC pumping of excimers can decrease by 3–4 times the electron-current density and increase appreciably the reliability of the electron gun. For more efficient utilization of the electron beam and to eliminate the harmful effect of the self-field of the electron beam at large active-medium volumes ($V = 10$ liters and more) it is necessary to apply an external magnetic field of ≈ 1 kG on the active medium. Application of such a field increases threefold the effective utilization of the electron gun,[37] and the use of opposing electron beams in an external magnetic field raises the efficiency of electron-beam absorption by the active medium to 90%.

One of the most important problems encountered in the development of high-power excimer lasers is that of the strength of the partitioning foil in the electron gun.[92] For a round aperture of radius r covered by a metallic foil with elastic limit σ^*, Young's modulus E, and Poisson coefficient μ, the maximum permissible pressure of the working gas is:

$$P^* = \frac{\sigma^*}{r} h \{6\sigma^* [E (1-\mu)^{-1}]\}, \qquad (18)$$

where h is the foil thickness.

In the case of typical apertures having $r = 0.25$ cm the limiting values are $P^* = 4.2$ atm for an aluminum foil 50 μm thick and $P^* = 16$ atm for a titanium foil 13 μm thick. Under real conditions the main factor that determines the service life of a foil is not its mechanical strength but the electron-beam energy released in the foil on passage of the pulse. The rate at which energy is lost by an electron beam passing through Al is ≈ 2 MeV·cm^2/g for electrons of energy ≈ 250 keV (Ref. 16). This value depends little on energy in the interval 0.4–1 MeV. Pulsed heating of the foil by 200 °C is produced by electrons of energy ≈ 1 MeV at an energy flux ≈ 100 J/cm^2 and is independent of the foil thickness. Foil heating in titanium is approximately $\rho_{Ti}/\rho_{Al} \approx 1.7$ times higher than in aluminum, but the thermal endurance of Ti, i.e., the maximum permissible temperature rise, is considerably higher, so that the energy flux can be increased by several times if titanium is used. The best properties are those of beryllium foils ($\rho = 1.8$ g/cm^3, and $T_{melt} = 1278$ °C), but the high toxicity of Be restricts its use. In monopulse systems one can replace the aluminum by metallized organic films such as "kapton," Mylar, and others, with density $\rho \approx 1$ g/cm^2.

By way of example, Fig. 18 shows a photograph of an electroionization excimer laser with active-medium volume $V = 40$ liters, constructed at FIAN,[93] and typical spectra of the spontaneous and stimulated emission of a KrF* excimer lasers.[82]

The laser shown in Fig. 18 uses modular electron guns with 20×30 cm exit windows. The active medium, 200 cm long and 20 cm wide, is ionized by six electron guns. Investigations of ArF, KrF, and XeF excimer lasing, carried out at FIAN,[82,84] have shown that for binary inert-gas halide excimers the optimum working temperature of the medium is substantially higher than room temperature ($T_{opt} = 400$ K).

Similar investigations of the operating temperatures of XeO excimer lasers[94,95] in the green region of the spectrum, using Xe: O_2 mixtures with optimum component ratio 1000: 1, have shown that the luminescence effectiveness and lasing efficiency increase when the temperature is lowered to 180 K. Investigations[94,95] of the kinetics of XeO excimer formation raise hopes of feasibility of lasing, in the green region of the spectrum, in the liquid containing $\approx 0.1\%$ oxygen. If the active medium is long enough, x-ray pumping can be used, just as for Xe excimers.

To conclude this section, we list in Table VII the interference mirrors developed at FIAN[96] for KrF* excimer lasers.

4. LASERS OPERATING ON ELECTRONIC TRANSITIONS OF MOLECULES

Following the advent of the Xe:Ar mixture laser,[6,82] based on transfer of excitation from the light inert gas to the heavy inert-gas impurity atoms, attempts were made to obtain lasing on effective luminescence quenching of compressed and condensed inert gases, viz., O_2 and N_2 impurity molecules. The first laser of this type, with Ar:N_2 mixture, was set in operation in 1974 at FIAN[97] and independently in

TABLE VII. Parameters of interference mirrors for KrF* excimer lasers ($\lambda = 248$ nm).[96]

Interference-mirror system	Transmission coefficient, %		Reflection coefficient, %		Damage threshold, MW/cm^2	
	At 25°C	After annealing at 300°C	At 25°C	After annealing at 300°C	At 25°C	After annealing at 300°C
$(HfO_2/SiO_2)^9 \cdot HfO_2$	1	1.2	96	97	15	23
$(HfO_2/MgF_2)^7 \cdot HfO_2 + \frac{\lambda}{2} MgF_2$	1		97		160	
$(HfO_2/MgF_2)^6 \cdot HfO_2 + \frac{\lambda}{2} MgF_2$	2		96		230	
$(HfO_2/MgF_2)^2 \cdot HfO_2$	33	33	64	65	170	200
$(HfO_2/MgF_2) \cdot HfO_2$	58	58.4	39	40	180	190
$(MgO/MgF_2)^{10} \cdot MgO$	3	2.5	89	91	40	60

the USA.[98–100]

The N_2-molecule laser on the transition $(C^3\Pi_u)_{v'=0} \rightarrow (B^3\Pi_g)_{v''=0}$, with emission wavelength $\lambda = 2271$ Å, has long been known to operate, with the low-pressure nitrogen excited either by a short discharge-current pulse[101] or by an electron beam.[102,103] The laser efficiency was 0.1% for discharge excitation and 0.15% for electron-beam excitation. To improve the energy properties of the N_2-molecule electric-discharge laser it was proposed in Ref. 104 to transfer the energy to the N_2 molecules from metastable states of the argon atom. In compressed nitrogen, as shown by experiments,[97] the most intense line produced in electron-beam excitation corresponds to the transition $(C^3\Pi_u)_{v'=0} \rightarrow (B^3\Pi_g)_{v''=1}$, and its intensity is increased by approximately one order when argon is added. This is evidence that direct excitation of the $(C^3\Pi_u)_{v'=0}$ level is small compared with population by excitation transfer from Ar* (Fig. 19).

The maximum specific power (≈ 70 kW/cm^3) and lasing energy (≈ 0.7 mJ/cm^3) were obtained for a 10:1 Ar:N_2 pressure of approximately 8 atm at a laser output-mirror transmission $T \approx 30\%$.[97] In these experiments the electron-beam current duration was $\approx 10^{-8}$ s and the active-region length 5 cm. A change to a current duration ≈ 50 ns and to an electron energy ≈ 200 keV resulted in a lasing energy 0.12 J (specific lasing energy ≈ 0.6 mJ/cm^3). The cavity used in this case comprised two plane-parallel mirrors with reflection coefficients 99.5 and 32% (stack of two sapphire plates). The measured beam divergence was $\theta = (5 \pm 2) \cdot 10^{-4}$ rad.[106]

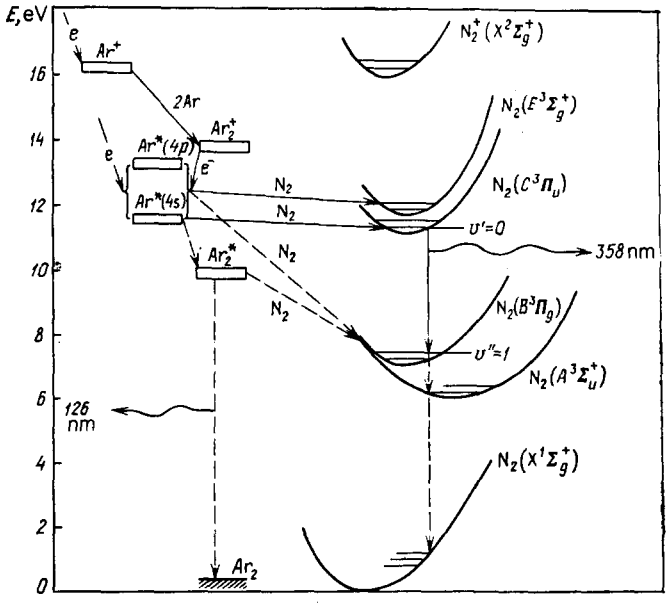

FIG. 19. Excitation kinetics of high-pressure Ar:N_2 laser.

Experimental and theoretical investigations of the inversion kinetics in an Ar:N_2 high-pressure laser[105,107] have shown that at low temperatures ($T = 293$ K) the lasing efficiency decreases. The optimum working-medium temperature turned out to be[107] ≈ 360 K. With further increase of the temperature, the lasing power decreases, although calculation[107] predicted an optimum temperature ≈ 500 K.

A simplified scheme of the kinetic processes that determine the lasing mechanism in the Ar:N_2 mixture is shown in Fig. 19. We present, in accordance with Refs. 100 and 107, the corresponding reaction chain and rate constants:

$$
\begin{aligned}
&Ar + e \rightarrow Ar^* + e, \\
&Ar + e \rightarrow Ar^+ + e + e, \\
&Ar_2^+ + 2Ar \rightarrow Ar_2^+ + Ar \quad (\text{see Secs. 3.1, 3.2}), \\
&Ar_2^+ + e \rightarrow Ar^* + Ar, \\
&Ar^* + 2Ar \rightarrow Ar_2^* + Ar, \\
&Ar_2^* \rightarrow h\nu + Ar + Ar, \\
&Ar^* + N_2 \rightarrow N_2(B) + Ar, && 1{,}7 \cdot 10^{-11} \text{cm}^3/\text{s}, \\
&Ar^* + N_2 \rightarrow N_2(C) + Ar, && 3 \cdot 10^{-11} \text{cm}^3/\text{s}, \\
&Ar_2^* + N_2 \rightarrow N_2(E) + Ar, && 1 \cdot 10^{-11} \text{cm}^3/\text{s}, \\
&Ar_2^* + N_2 \rightarrow N_2(B) + 2Ar, && 1 \cdot 10^{-11} \text{cm}^3/\text{s}, \\
&N_2(E) + Ar \rightarrow N_2(C) + Ar, && 3 \cdot 10^{-12} \text{cm}^3/\text{s}, \\
&N_2(C) \rightarrow h\nu + N_2(B), && \tau \approx 4 \cdot 10^{-8} \text{ s}, \\
&N_2(C) \rightarrow N_2 \rightarrow N_2(B) + N_2, && 1{,}5 \cdot 10^{-11} \text{cm}^3/\text{s}, \\
&N_2(C) + Ar \rightarrow N_2(B) + Ar, && 8 \cdot 10^{-13} \text{cm}^3/\text{s}, \\
&N_2(B) \rightarrow h\nu + N_2(A), && \tau \approx 0{,}9 \cdot 10^{-5} \text{ s}, \\
&N_2(B) + N_2 \rightarrow N_2(A) + N_2, && 2 \cdot 10^{-12} \text{cm}^3/\text{s}, \\
&N_2(B) + Ar \rightarrow N_2(A) + Ar, && 1{,}4 \cdot 10^{-14} \text{cm}^3/\text{s}, \\
&N_2(A) + N_2(A) \rightarrow N_2(E) + N_2, && 1 \cdot 10^{-11} \text{cm}^3/\text{s}, \\
&N_2(A) + N_2(A) \rightarrow N_2(C) + N_2, && 1 \cdot 10^{-11} \text{cm}^3/\text{s}, \\
&N_2(A) + N_2(A) \rightarrow N_2(B) + N_2, && 8 \cdot 10^{-11} \text{cm}^3/\text{s}. \quad (19)
\end{aligned}
$$

The $N_2(C)$ state of the nitrogen molecules is populated in collisions with excited $Ar(^3F, ^1P_1)$ atoms mainly in a state with $v' = 0$ (v' is the vibrational quantum number).[108] The rate of this reaction decreases rapidly with decreasing temperature and tends to 0 at $T \approx 100$ K. Above room temperature, however, this constant increases linearly with temperature up to 600 K.[107] When the temperature is lowered the efficiency of Ar_2^* molecule formation also decreases and with it the collisional population of the $N_2(B)$ levels. Up to 350 K the calculated and experimental results are in good agreement, but the theory predicts an increase of laser efficiency with rising temperature right up to 600 K. The maximum calculated laser efficiency, assuming instantaneous depopulation of the lower laser level $N_2(B^3\Pi_g)_{v''=1}$, reaches 16.4% and amounts for a self-limited transition to $\approx 8.2\%$. When account is taken, however, of all the factors specified by the reactions cited above, a maximum $Ar:N_2$ laser efficiency can be expected at $T = 500$ K, at a component mixture $Ar:N_2 = 10:1$, and at a mixture density $n \approx 3.9 \cdot 10^{19}$ cm^{-3}. This calculated value is $\eta_{max} \approx 3.3\%$.[107] Estimates of the experimentally obtained maximum efficiency are limited to $\approx 2\%$.

An compressed $Ar:N_2$ mixture laser is promising for repetitive lasing at high pulse-repetition frequencies. An important advantage of this laser is the high optimal working temperature of the active medium and its chemical durability.

Investigations of $Ar:N_2$ lasers stimulated the development of a high-pressure laser for the violet band, based on the $B^2\Sigma_u^+ \rightarrow X^2\Sigma_g^+$ transition of the molecular nitrogen ion, first produced in the USA[109,110] in 1974. Lasing on this ion transition was obtained at FIAN[106] in 1975 as a result of investigations of the luminescence of $He:N_2$ mixtures at pressures 2–10 atm, which revealed a rather high luminescence efficiency, $\approx 4\%$.[106]

The low rate of depletion of the lower levels in lasers on electronic transitions of N_2 and N_2^+ molecules stimulated a search for a three-component mixture, with addition of a "quencher" for the lower laser level. To solve the problem of depopulation of the lower laser levels, use was made of longer pump pulses and a quasicontinuous regime (and hence a considerably higher laser power). Another important problem was that of lowering the external-ionizer power by using as a pump an external electric field.[17]

Recent experiments[111] at FIAN resulted in quasicontinuous lasing on nitrogen ions in three-component mixtures. Self-limited lasing on the first negative system of N_2^+ was obtained in Refs. 106, 109, and 110.

The cross sections for induced transitions in molecules, which are smaller by 2–3 orders than atomic, impose an additional requirement on the "quenching" process, besides speed and selectivity. It is necessary that the N_2^+ molecular ions produced as a result of the repopulation not absorb the laser radiation. A promising substance is hydrogen, since the N_2H^+ ion produced together with the heavy-particle transition $N_2^+(X) + H_2 \rightarrow N_2H^+ + H$ does not absorb the radiation of the first negative system of nitrogen,[110] and the rate constant of this process is very high, $\approx 2 \cdot 10^{-9}$ $cm^3 \cdot s^{-1}$.

Consequently, 2 Torr of hydrogen suffice to make the rate of deactivation of the lower laser level higher by an order of magnitude than the rate of spontaneous of the upper laser level ($\nu_{sp} \approx 1.6 \cdot 10^{-7}$ s^{-1}, Ref. 106). In addition, it follows from the ratio of the rate constants of the ion-molecular processes[62] that the efficiency of exciting the upper laser level decreases insignificantly. Nonetheless, if the usual situation is realized, wherein the more excited states are more rapidly quenched,[62] development of an effective laser is impossible.

The possibility of developing an effective quasicontinuous laser on the B–X transition of N_2^+ is consequently determined by the ratio of the quenching rates of the B and X states of the nitrogen ion by the H_2 molecules. At a pressure H_2 equal to 2 Torr, which ensures the necessary rate of repopulation of $N_2^+(X)$, the radiation power is decreased by 15–20%.

Since the $B_{v=0}$ state of the nitrogen ion is populated, upon excitation of the $He:N_2$ mixture by an electron beam, via two channels, viz., charge exchange $He_2^+ + N_2 \rightarrow N_2^+(B) + 2He$ of molecular helium ions[109] and Penning ionization[62] $He^* + N_2 \rightarrow N_2^+(B) + He + e$[62], it follows that to estimate the constant of $N_2^+(B)$ quenching by hydrogen molecules we must know the ratio of the efficiencies of the two channels.

At a nitrogen concentration $\gtrsim 10^{18}$ cm^{-3} the only channel that ensures population of $N_2^+(B)$ is the Penning process. In accordance with Ref. 126, the ratio of the number of excited He atoms to the number of ions when helium is excited by an electron beam is ≈ 0.53. Analysis of the asymptotic behavior of the dependence of the spontaneous-emission power on the nitrogen pressure shows that the probabilities of $N_2^+(B)_{v=0}$ production via both channels are practically equal. In view of this circumstance, the dependence of the luminescence intensity on the hydrogen pressure permits an estimate of the rate of quenching of the $(B^2\Sigma_u^+)_{v=0}$ state by hydrogen, found to be $\lesssim 10^{-11}$ $cm^3 \cdot s^{-1}$. The rate of "quenching" of the upper laser level by hydrogen is at least 100 times less than that of the lower.

The lasing experiments were performed with the apparatus described in Ref. 111. The laser active medium was excited by an electron beam having the following parameters: electron energy $W \approx 200$ keV, electron-current pulse duration $\tau \approx 0.7$ μs, current density $j_e \approx 7$ $A \cdot cm^{-2}$. The volume of the laser active medium was ≈ 1 liter. In the investigation of lasing at $\lambda = 428$ nm the laser cavity was made up of selective dielectric mirrors measuring 8×3.5 cm and having transmission coefficients $T_1 \lesssim 0.10\%$ and $T_2 \approx 1\%$.

The laser-emission characteristics were investigated mainly at an $He:N_2:H_2$ mixture pressure 6 atm. The experiments have shown that at an H_2 pressure 2 Torr the optimum N_2 pressure was 4 Torr. Increasing the concentration of the nitrogen in the mixture in excess of that ensuring the maximum luminescence efficiency in the $He:N_2$ mixture, is due to competition between the pumping of the upper laser level and the ionization of H_2.

The dependence of the lasing energy and of the efficiency of a laser at $\lambda = 427.8$ nm on the electron-beam cur-

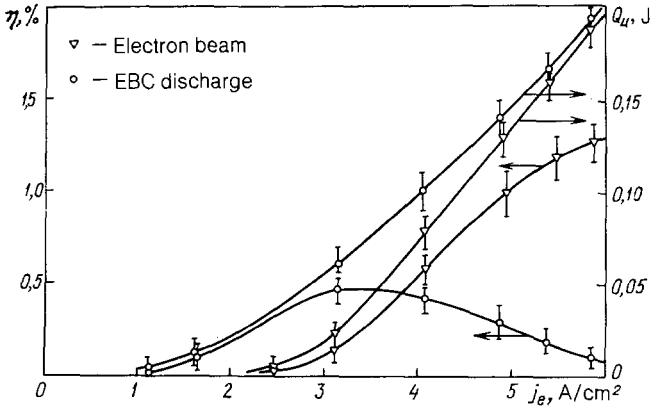

FIG. 20. Efficiency and energy of lasing on N_2^+ ions ($\lambda = 427.8$ nm) versus electron-beam current density.[111]

rent density is shown in Fig. 20.

The lasing takes place near the "red edge" of the first negative system of nitrogen, and not on the P(7) line corresponding to the maximum population of the upper laser state. The reason is that already at a pressure of several atmospheres the broadening of the gain contour of an individual rotational line by the helium exceeds substantially the spacing between then near the edge.[62] As a result, contributions to the gain on the P(12) transition, for example, are made also by the transitions P(9)–P(13). It follows hence also that an increase of the buffer-gas pressure leads, in the case of beam pumping, to an increase of the gain, as confirmed by experiments at 10 atm. Under these conditions, the lasing efficiency reached 2%, owing in particular to the faster evolution of the lasing.

When a nonselective cavity was used (aluminum-coated mirror), lasing took place only on the 0–0 band of the B–X transition in the UV band ($\lambda = 391$ nm), and the emission-pulse duration reached 400 ns.

Thus, the selectivity, observed in Ref. 111, of the repopulation of the B and X states of N_2^+ by hydrogen has made it possible to obtain, for the first time, high-power quasicontinuous lasing on the 0–0 and 0–1 bands of the first negative system of nitrogen, with efficiency up to 2%.

It appears that the described lasers on electronic transitions of molecules are promising also if the working media are cooled and liquefied Ar:H_2 and He:N_2:H_2 mixtures. The high-densities of cooled and liquefied gases permits high lasing densities to be obtained at moderate working-medium pressures.

5. LASERS OPERATING ON ELECTRONIC TRANSITIONS OF INERT-GAS ATOMS

The most important stage of excitation-energy conversion in the kinetic scheme of formation of Xe_2^+ excimers in high-pressure Ar:Xe mixtures is the formation of excited Xe* atoms. Since the excited Xe* atoms appear in various electronic states, there is some probability of lasing on atomic transitions that are well known for low-pressure lasers. A similar situation is possible also for other compressed inert-gas mixtures He:Ne, He:Ar, He:Kr, He:Xe, Ne:Ar, Ne:Kr, and Ar:Kr. Thus, one can hope that electron-beam excitation of compressed inert-gas mixtures can yield lasing on known lasing transitions of the neutral inert atoms Ne, Ar, Kr, and Xe in the range from $\approx 10\,\mu$m to $\approx 0.3\,\mu$m. The first attempt at the calculations and at obtaining lasing on electronic transitions of Ne and Xe at high pressures, by using electron-beam pumping in an electric field, was made at FIAN in 1970 (Ref. 17). The calculations were performed for a high-pressure He-Ne laser, and electron-beam control pumping of molecular inert gases compressed to 7 atm was accomplished for the first time, but no lasing was obtained.

5.1. Electron-beam-controlled high-pressure visible-band laser operating on xenon-atom electronic transitions

Lasing on electronic transitions of inert-gas atoms at high pressures (up to 17.5 atm) was first obtained in Ref. 112, with the compressed gas excited by a fast electric discharge. Pumping large volumes of inert gases by an electron beam,[113,114] by nuclear methods,[115] and by electron-beam-controlled (EBC) discharge[113,114] yielded an efficiency $\approx 1\%$, a lasing energy ≈ 0.85 J/liter at a medium active-volume 0.12 liter,[114] and a peak lasing power ≈ 200 kW in a volume of 0.5 liter.

The research at FIAN during the last few years resulted in a lasing energy ≈ 60 J at an active-medium volume 10 liters,[116,129] and a lasing peak power 20 MW. The physical laser efficiency reached 5.5%, while the energy-storage efficiency was $\approx 3\%$ (Refs. 117, 118, 119). EBC-discharge pumping was used.

Such high lasing power and high efficiency, close to the quantum value, could be obtained by the practical ability to pump the working laser levels by the electrons from the EBC discharge. This pumping, however, was not from the ground state of the Xe atom but from the metastable 6s states (Fig. 21). Ionization and excitation of Ar and Xe atoms in accordance with the kinetic scheme shown in Fig. 16 results in production of excited Xe* atoms, particularly in 7d and 5d states. Lasing sets in on the transitions 5d–6p and 7p–7s in He:Xe, Ar:Xe, and Kr:Xe mixtures (Fig. 22). The lower

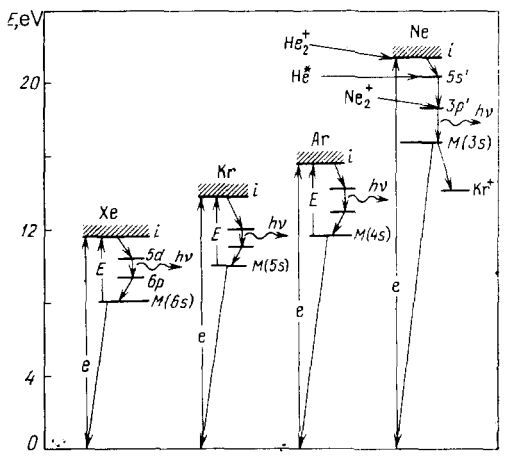

FIG. 21. Excitation of electronic levels of inert-gas atoms by an electron beam (e) and by an electric field (E).

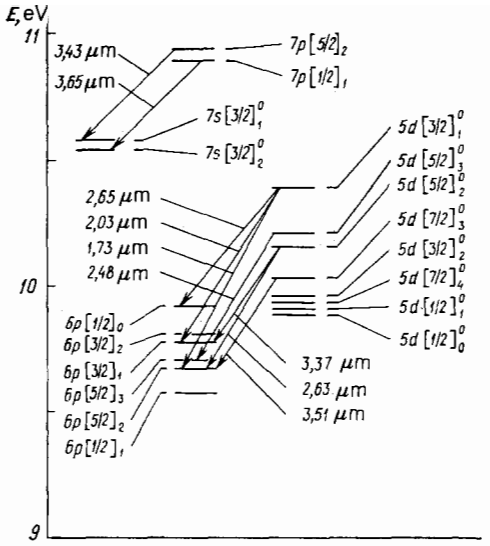

FIG. 22. Optical transitions in a high-pressure Ar:Xe, Kr:Xe, and He:Xe lasers.

laser levels are quenched and metastable Xe atoms are produced in the 6s state. When the electric field of the EBC discharge is turned on, the working levels are excited, at sufficiently high concentration of the metastables, no longer from the ground state of the xenon atom, but from the 6s states. The role of the electron beam reduces in this case both to maintaining the conductivity of the medium, essential for the discharge to take place, and to production of metastable atoms. In pure electronic pumping the laser efficiency is $\approx 1.5\%$. When the discharge is turned on, the efficiency increases to 5.5%. Investigations of the possibility of a transition to continuous lasing have shown that such a regime is feasible in principle at an external electron-beam current ≈ 10 mA/cm^2. Model experiments yielded a quasicontinuous lasing duration ≈ 20 μs and permitted the electron-beam current density to be lowered from 4 A/cm^2 to 20 mA/cm^2. In the latter case the ratio of the electric pump energy to the electron-beam pump energy reached 100:1. The exterior of the laser is shown in Fig. 23. The experimental results were published in Refs. 116–119, and the theoretical model of excitation via metastable xenon atoms is discussed in Refs. 118 and 119. The extraordinarily high optical quality of the active medium of a compressed-xenon laser (the optimal pressure for a setup with a working volume of 10 liters is about 3.5–4 atm) made it possible to obtain, in a system with an unstable telescopic cavity, a beam divergence (Fig. 24) determined by the diffraction by the exit aperture (10 cm diam) of the laser. In absolute value, this corresponds to concentrating half the laser-beam energy in an angle $\theta \sim 3 \cdot 10^{-5}$ rad.

Since the working laser transitions lie in an energy region ≈ 10 eV relative to the ground level, the working medium of a compressed-xenon laser can be heated in principle to high temperatures (1500–2000 K). One can thus expect a

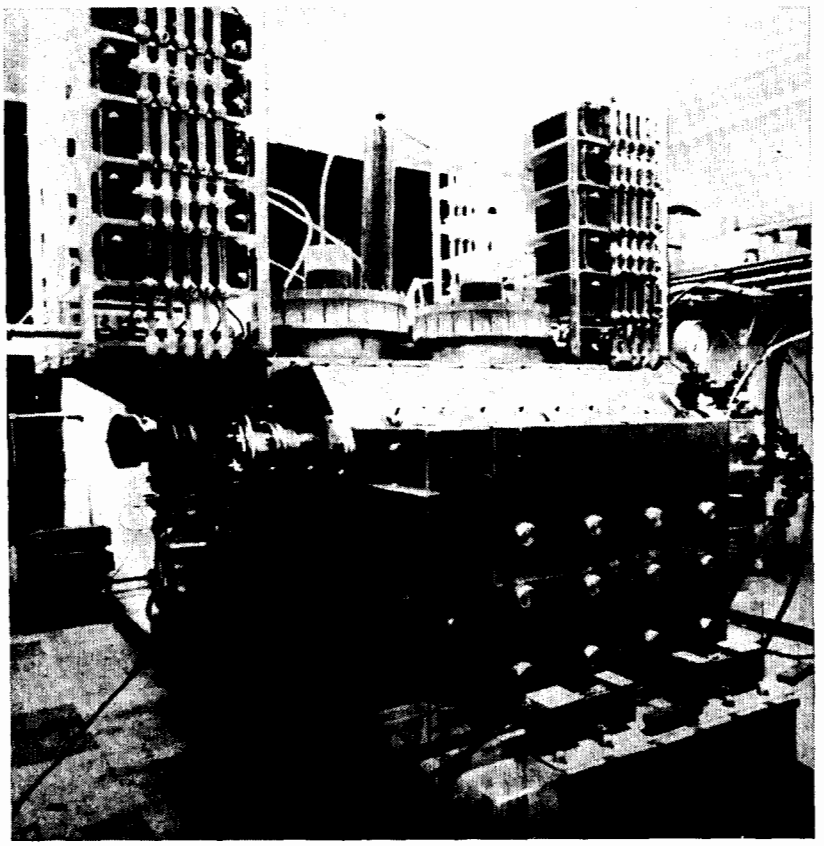

FIG. 23. Photograph of electroionization compressed-inert-gas laser.

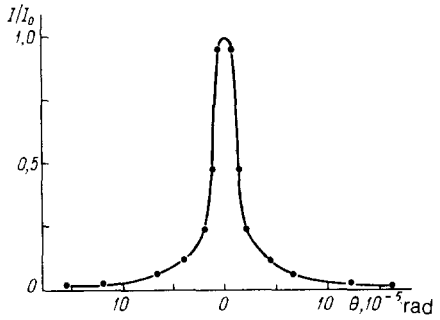

FIG. 24. Radiation-intensity distribution in the solid angle of the beam of a compressed Ar:Xe laser.

rather high specific energy output ($\approx$100–300 J/liter) at high pressures ($\approx$10–20 atm) and low temperatures of the working medium ($\approx$150 K), as well as a high average lasing power in the cw and pulse-repetition regimes. Apparently, just as in the case of the liquid-xenon excimer laser, lasing can be obtained when the active medium is in the liquefied state at $T\approx$80–100 K. In the latter case the maximum energy yield can tend to 1 J/cm^3.

The high transparency of the atmosphere to xenon-laser emission at $\lambda = 1.73$ μm, the relatively high efficiency $\approx$5.5%, and the substantially lower wavelength than in commercial CO–CO_2 lasers, make the EBC Xe laser one of the serious competitors of CO_2 lasers. Since the working mixture in the Xe laser consists only of inert gases and is therefore not degraded by the discharge and by the electron beam, while the optical elements can be made of quartz and glass, the Xe laser may turn out to be more economical than commercial CO–CO_2 lasers, the low efficiency notwithstanding.

Without going into details of the mechanism of excitation of the working levels (see Refs. 116–119), we note that turning on an EBC discharge in He:Xe mixtures decreases rather than increases the lasing energy. A similar situation is observed also in lasers on electronic transitions of Kr and Ne atoms. The use of EBC pumping to excite these lasers increases the lasing energy only for the 4d–4p transitions of the argon atom. On the whole, the efficiencies of Kr and Ar lasers are low, about 1%. The efficiency of a laser on Ne transitions with high-power pumping is also low, but the situation changes radically on going to low excitation density and to the quasicontinuous regime.[145]

5.2. Quasicontinuous high-pressure visible-band laser operating on neon-atom 3p–3s transitions

Lasing on self-limited $np^5(n+1) - p - np^5(n+1)s$ transitions of compressed heavy inert gases Ar, Kr, and Xe was first obtained in a fast discharge by V. P. Chebotaev's group (pump power $\sim$1 GW/liter) by exciting the upper laser level by electron impact from the ground state.[112,120]

An He–Ne laser on self-limited 3p–3s ($\lambda = 585.25$ nm) transitions of neon was first produced in 1965.[121] It was noted then that the lasing intensity increased for three-component mixtures when a small amount of argon was added. Lasing by pumping with a transverse-discharge[122] and a high-power electron beam from a high-pressure laser at $\lambda\approx$585.25 nm at an excitation duration 80 ns was obtained in Ref. 123.

Another effective mechanism for selective population of low-lying p states, realized when high-pressure inert gases are pumped by an electron beam, is dissociative recombination of the molecular ions.

The large ($\gtrsim 10^{-13}$ cm^2) cross sections for allowed p–s transitions permit in principle a realization of quasicontinuous lasing in the visible band in the case of selective depopulation of the $np^5(n+1)s$ states. However, the rapid spontaneous decay of the upper laser level, with $\nu_{sp}\approx 10^8$ s^{-1}, requires a high rate, $\sim 10^9$ s^{-1} of depopulation of the lower level. Such a deactivation frequency should be ensured by the value of the rate constant $\sim 10^{-9}$ cm^3·s^{-1} of the "quenching" process, a value that can be achieved for example in a process in which the quencher is ionized. A promise is offered in this respect by the use of 3p–3s transitions of Ne, since its 3s states lie above the ionization potential of most atoms and molecules, and the emission wavelengths of all these transitions lie in the visible band. Preferred "quenchers" of the 3s states are heavy inert gases. The rate constant of the charge exchange with Ne_2^+, a process that competes with the dissociative recombination of Ne_2^+, is relatively small in this case.

In a collision in which an electron is released, the states most rapidly quenched are at resonance with the ground state, and this ensures their selective depopulation. For example, the rate of depopulation of the resonant $2^1P_1^0$ state of He in a process with ionization of heavy inert gases exceeds by 1–2 orders the rate of deactivation of the metastable states 2^1S_0 and 2^3S_1 (Ref. 127). There are no corresponding experimental data for Ne. An estimate according to Ref. 127 shows, however, that the necessary rate of depopulation of the resonant $3s'[1/2]_1^0$ state can be achieved already at a quencher concentration $\approx 10^{18}$ cm^{-3}. The deactivation rate constant for another resonant level $3s[3/2]_1^0$ is smaller by a factor 2.5. The Ne concentration is limited by the proper quenching of the upper lasers levels and, for example for the $3p'[1/2]_0$ level, it amounts to $\sim\nu_{sp}/k_q$ Torr, where $k_q\approx 2\cdot 10^{-11}$ cm^3·s^{-1} is the rate constant for the quenching of this level by neon. The efficiency of excitation and lasing is increased by adding a buffer gas, which can be only helium for the case of neon. The pump power, which determines the density of the "slow" electrons, is limited both by the "extinction" of the upper laser level by the electrons[125] and by the three-particle recombination of He_2^+ with participation of two electrons.[128] We note that dissociative recombination of a molecular helium ion takes place slowly, and the rate of charge exchange with He_2^+ for Ne is much higher than for Ar, Kr, and Xe.[126]

The arguments above allow us to expect quasicontinuous lasing on 3p–3s transitions of Ne via excitation of a three-component high-pressure mixture of noble gases by an electron beam.

An He:Ne:Kr (Ar) mixture was excited with an electron beams having current densities 10^{-3}–10 A/cm^2, pulse durations 0.5–200 μs, and average electron energy $\approx$200

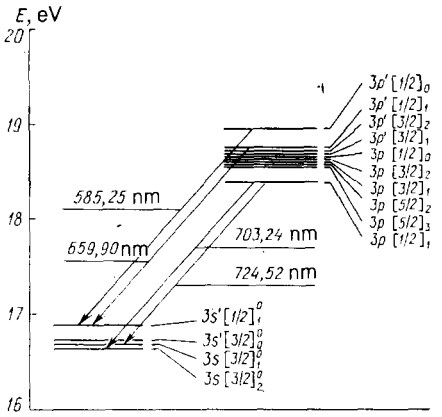

FIG. 25. Optical transitions in high-pressure laser on 3p–3s transitions of Ne I.

keV. The laser-emission spectra were recorded with an ISP-51 spectrograph. The lasing energy was measured with a calorimeter of sensitivity 20 mV/J. The optical volume of the laser was 1 liter.

Figure 25 shows the 3p and 3s level scheme of Ne and the observed laser transitions. At relatively low Ne and Kr (Ar) concentrations in the mixture, lasing is produced only at $\lambda = 5852.5$ Å (see Fig. 25). This is due to the high efficiency of populating the $3p'[1/2]_0$ state by dissociative recombination of Ne_2^+ (Ref. 124), to the fastest mechanism of depopulation of the resonant $3s'[1/2]_1$ level in the considered system of transitions, and to the fact that the ratio of the statistical weights of these level is optimal for lasing. The mixing of the $3s[3/2]_1$ and $3s[3/2]_2$ states by the neon (via exchange interaction) and by the electrons, as well as the rapid deactivation of the resonant $3s[3/2]_1$ level by krypton, leads to lasing at $\lambda = 7032.4$ Å and $\lambda = 7245.2$ Å when the pressure of Ne and Kr is increased (see Fig. 25).[4)] Since these transitions have the same lasing upper level, the appearance bothlines in the lasing spectrum means that at Ne pressure $\lesssim 1$ atm the transition $3p[1/2]_1$–$3s[3/2]_2$ is self-limiting. Further increase of the Ne pressure in the mixture makes possible quasicontinuous (pump and lasing duration $\approx 0.\ \mu s$) laser emission at $\lambda = 7032.4$ Å. Lowering the He pressure in the mixture slows down the exchange between the 3p′–3p level groups and is accompanied by the onset of lasing at $\lambda = 6599.0$ Å (see Fig. 25).

The maximum efficiency and lasing energy were obtained for the $3p'[1/2]_0$–$3s'[1/2]_1$ transition. Figure 26 shows plots of the efficiency and of the specific lasing power P_{las} at $\lambda = 5852$ Å vs the specific pump power P_P. The mixture composition and the cavity parameters were optimized for a fixed mixture composition at a constant total pressure 3 atm, since the radiation intensity in the cavity was limited by the finite rate of depopulation of the lower laser level. We note that at a Kr (Ar) pressure $\gtrsim 30$ Torr the lasing pulse duplicated, for all investigated excitation regimes, the pump pulse, and that the maximum lasing duration reached 200 μs. The experimental points on Fig. 26 correspond to the maximum values of η and P_P. The optimum efficiency $\sim 2\%$ is reached at $P_P \approx 70$ kW/liter, corresponding to an electron-beam current density ≈ 10–20 mA/cm^2 at a typical mixture composition He:Ne:Kr(Ar) = 50:1.5:1. The decrease of η with increase of pump power is due primarily, as noted above, to the increased influence of the electronic deactivation of the $3p'[1/2]_0$ and the three-particle recombination of He_2^+. An estimate shows that at a specific pump power ≈ 2 MW/liter the rates of these processes are comparable with the rate of spontaneous decay of the upper laser level and of the charge transfer from He_2^+ to Ne, respectively. Note that the efficiency changes by not more than 20% in the wide range $P_P \approx 60$–400 kW/liter. Since the rate of charge transfer from Ne_2^+ to Kr (a process that competes with recombination population of the upper laser level) is higher by about a decade than the transfer to Ar, it follows that replacement of krypton by argon improves somewhat the specific laser characteristics at low pump powers.

Turning-on an EBC discharge that raises the electron temperature in the laser-medium plasma lowers the lasing power, just as in the case of an Xe laser, notwithstanding the appreciable increase of the pump energy. No unequivocal explanation has been found for this effect. Even though a laser operating on 3p–3s transitions of the Ne atom can be pumped only by an electron beam, the tremendous decrease of the specific excitation power for the three-component mixtures He:Ne:Kr (Ar) raises hopes of realizing a cw regime in practice.

Further prospects of developing lasers based on electronic transitions in atoms involve a search for excitation regimes and mixture compositions such that lasing can be obtained on new transitions, particularly in the green band of the spectrum ($3p'[1/2]_0$–$2s[3/2]_1^0$ transition of Ne I), as well as feasibility studies for lasers with high specific lasing energy in cooled compressed and condensed gases. It appears that compressed- and condensed-gas lasers based on ion transitions, especially those of Ar and Kr in the green and red bands of the spectrum, are also realistic.

6. ELECTRON-BEAM-CONTROLLED CO–CO_2 LASERS

Compressed-laser pumping by electron beams is a highly effective method of exciting electronic levels of atoms and

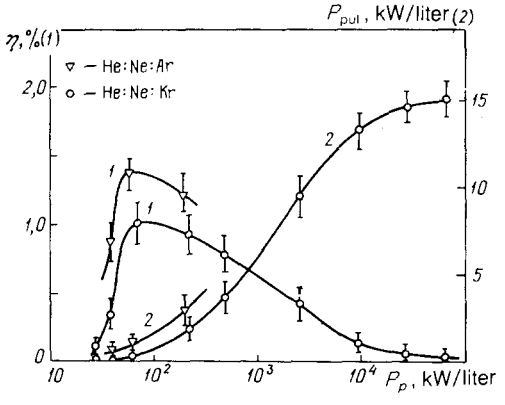

FIG. 26. Dependences of the efficiency (1) and of the emission power (2) of a high-pressure helium-neon laser on the specific pump power.[111]

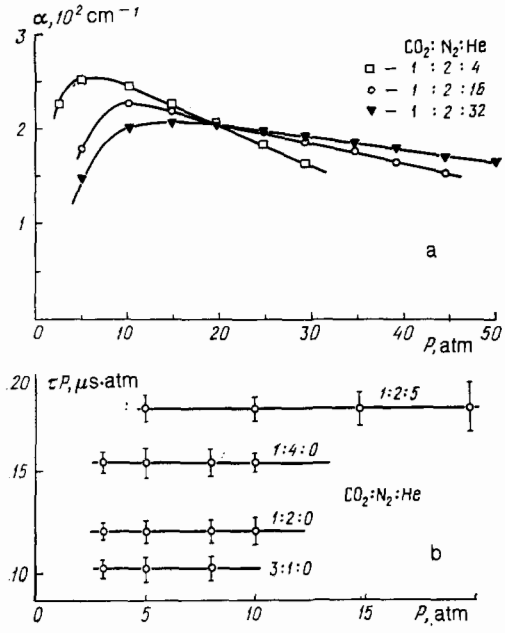

FIG. 27. Gain (a) and product of the relaxation time by the pressure (b) versus pressure for an EBC CO_2 laser.

molecules, but rather ineffective for exciting rotational-translational states (see Sec. 2.2). In the EBC method, the working levels are pumped by inelastic collisions between the molecules and electrons accelerated in an external electric field. As shown in Sec. 2.2 (see Fig. 10) this method is optimal for excitation of molecule vibrations. The intensity of the electric field in which the electrons have an energy 1–2 eV corresponding to the maximum of the cross section for molecule-vibration excitation ($\sigma v \approx 10^{-15}$ cm^2 for N_2, CO_2, and CO) is appreciably lower than that of the field in which spontaneous ionization sets in. The EBC method of pumping makes possible in practice to choose an electric field such that up to 98% of the energy drawn by the electrons from the field goes to excitation of molecule vibrations without any danger to the stability of the discharge.[23–25] These considerations influenced the choice of the CO_2:N_2 mixture as the active medium of the first compressed-gas EBC laser.[9]

6.1. Pulsed electron-beam-controlled CO–CO_2 lasers

The adoption of working pressures higher than 1 atm, along with the need for entry of energy into a compressed gas (see Sec. 2.2), called for answers to the following fundamental questions:

1. Up to which working-medium pressures does the rate of population inversion by the EBC method exceed the rate of the quenching processes?

2. Up to which working-medium pressures will the broadening of the working levels with increasing pressure be offset by the increase of the inverted population?

These questions were answered in Refs. 6, 10, 11, and 13. Lasing was obtained in CO_2:N_2:He mixtures up to ≈ 100 atm pressure,[12] and the pressure dependences of the gain and of the gain spectra of the active medium were measured.

We present the experimental pressure dependences of the gains of CO_2:N_2:He mixtures on the pressure (Fig. 27a). It can be seen that the gain is $\sim 2\cdot 10^{-2}$ cm^{-1} (the gain values shown in the figure are close to the maximum obtainable with the particular apparatus), practically the same as the low-pressure values typical of glow-discharge excitation. The gain decreases with increasing pressure because at high pressures it became necessary to decrease the value of E/P, inasmuch as in a compressed working medium the spark-breakdown voltage increases with pressure at a less than linear rate.

The dependence of the population-inversion fall-off time τ on the pressure following instantaneous pumping was also investigated. It was found that for mixtures having different collisional-relaxation times the inversion fall-off time is inversely proportional to the pressure, $\tau \sim 1/p$ (Fig. 27b).

It can be concluded from these investigations[6] that the rates of the quenching processes increases quadratically with pressure, as does also the pumping rate $dN/dt = n_e \langle \sigma_v v \rangle N$ (here N is the concentration of the active molecules, n_e is the electron density, σ_v is the cross section for vibration excitation by electrons of velocity v, and the angle brackets denote averaging over the velocity). Since n_e/N is constant in an EBC laser (see Sec. 2.2) and since $N \sim P$, it follows that $dN/dt \sim p^2$. It follows therefore also that, first the gain is independent of pressure

$$\alpha(p) \sim \frac{\Delta N}{\Delta \nu} \approx \text{const} \tag{20}$$

(here ΔN is the population inversion and $\Delta\nu$ is the width of the gain lines; for collision broadening we have $\Delta\nu \sim p$), and the maximum power dW/dt of quasicontinuous lasing increases like p^2:

$$\frac{dW}{dt} \sim h\nu \frac{dN}{dt} \sim h\nu n_e \langle \sigma_v v \rangle N \sim p^2. \tag{21}$$

Figure 28 shows the calculated pressure dependence of the CO_2-laser power. The symbols mark the experimental data: the two lower for low pressures in a glow discharge, and the two upper for high pressures and EBC pumping.[11]

At high pressures the rotational components of the gain line are broadened and at the pressure cited above, 8–10 atm, the rotational lines overlap and the gain spectrum becomes smooth with a width $\approx 10^{12}$ Hz. Calculations and experimental investigations of the gain spectra, up to ≈ 10 atm pressure, were carried out in Refs. 6, 8, and 13. In the same

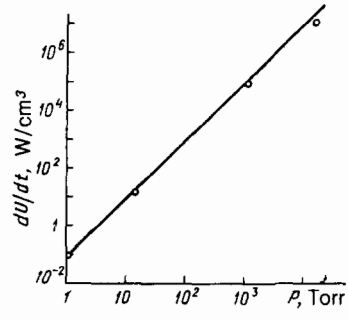

FIG. 28. Maximum quasicontinuous lasing power per unit of the active volume of the active medium of a CO_2 laser versus pressure.[8]

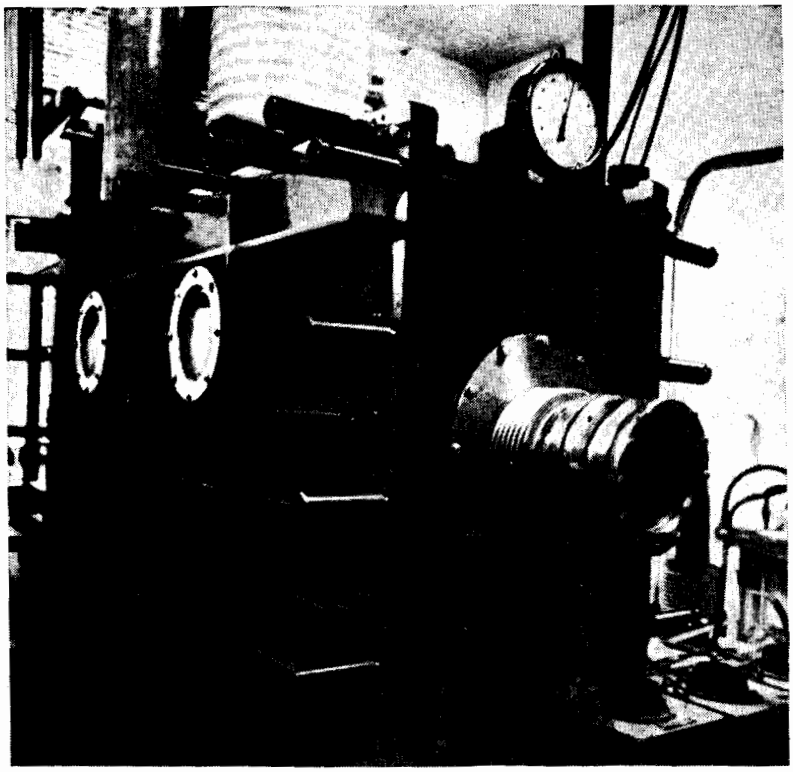

FIG. 29. Exterior view of EBC pulsed CO laser.

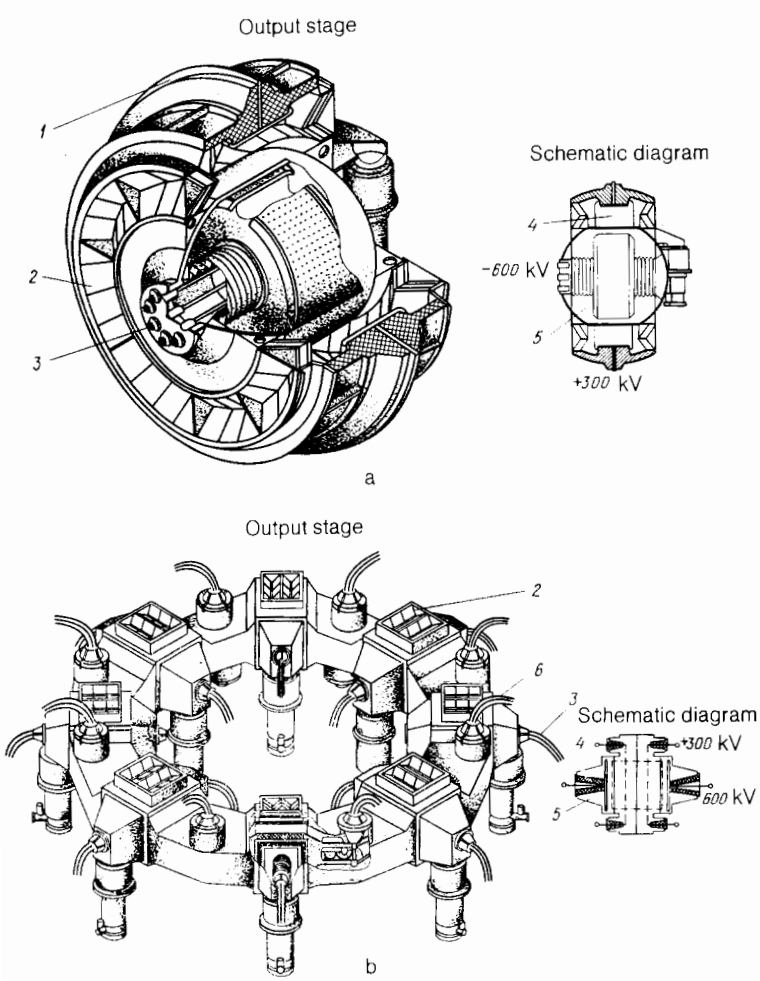

FIG. 30. Diagrams of output stages of EBC pulsed laser amplifier emitting 100 kJ energy.[91] a—Coaxial scheme, b—annular scheme. 1—Anode lead-in, 2—radiation exit window, 3—accelerator cable lead-in, 4—anode, 5—accelerator, 6—anode cable lead-in.

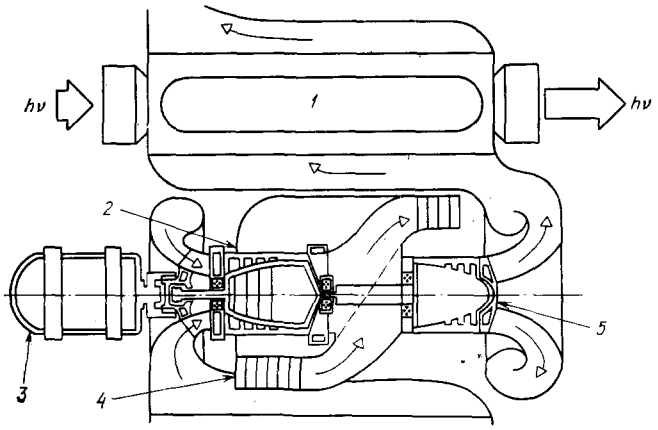

FIG. 31. Turbocompressor system for drawing the active medium through an annular output amplifier stage.[91] 1—Electron gun, 2—compressor, 3—electric motor, 4—heat exchanger, 5—turbine.

references, following the first estimates of the feasibility of generating high-power ultrashort pulses[9,13] in compressed CO_2, smooth frequency tuning and mode locking were achieved and nanosecond pulses were generated.[6,12–14] By choosing the E/p value that is optimal for EI pumping it was possible to obtain a lasing efficiency $\approx 30\%$ and an energy output ≈ 71 J/l·atm for CO_2, and 40% and 100 J/l·atm for CO.[6,52,147] A feature CO EBC lasers (EBCL). In contrast to CO_2 EBCL, is an unusually rich lasing spectrum, viz., lasing is obtained on transitions between neighboring vibrational levels from $v = 18$ to $v = 4$ (Ref. 52). The frequencies of high-pressure CO lasers are therefore tunable over a rather wide range, from 6 to 5 μm (Ref. 21; see Fig. 29).

The high efficiency of EBC CO_2 lasers, the possibility of generating ultrashort pulses down to 10^{-12} s, and the possibility of maintaining a high efficiency with saturated amplification[14] make these lasers promising for laser-driven thermonuclear fusion.[51,91] Figure 30 shows diagrams of the output amplification stages of the "Ellis" pulsed EBC unit (FIAN 1974 design) with a pulsed output energy ≈ 100 kJ. The coaxial construction of the output module of one of the variants of the design (Fig. 30a) is close in many respects to the engineering solution obtained in the "Antares" apparatus of the Los Alamos laboratory.[91] In the annular scheme (Fig. 30b), the active medium can be drawn through the amplification stages and through the heat exchangers placed between them. In this variant of repeated-pulse operation it is advantageous to propel the working medium by a turbocompressor that makes use of part of the heat released in the working medium (Fig. 31).

6.2. Technological electron-beam-controlled CO_2 lasers

The first calculations for EBC CO_2 lasers[11] have demonstrated the feasibility of cw and repeated-pulsed lasers of this type. It followed from these calculations that in the cw regime the specific contribution of the power needed to pump the working medium by an electron beam can be reduced to 0.01% of that by pumping with an electric field.

The first cw EBC CO_2 laser (CO_2 EBCL) was produced in 1972 in the USA.[193] Reports of Soviet technological EBC lasers were published in 1979 (Refs. 21 and 134), although experimental implementation of cw and quasi-continuous EBC discharges was communicated much earlier (Refs. 130–132). We present in this section the main properties of a technological EBC laser operating both in the pulsed and in the cw regimes, using carbon dioxide ($\lambda \approx 10.6\ \mu$m) and carbon monoxide ($\lambda = 5.5\ \mu$m).

A triode electron gun with electron-beam area 200×1000 mm and with a straight-channel tungsten cathode delivered a maximum electron current density through the foil up to 7 μA/cm^2 at a supply voltage up to 250 kV. In the upper left corner of Fig. 9 are shown typical oscillograms of the electron-current pulses (bottom) and of the EBC-discharge current (top) in the pulse-train regimes. Figure 8 shows the current-voltage characteristics of an EBC discharge in a CO_2-laser mixture. The average delivered lasing power was ≈ 10 kW both in the pulsed and in the cw regime. An unstable three-pass telescopic cavity was used, made up of cooled copper mirrors with coupling coefficient 50%. The radiation was extracted to the atmosphere through a KCl window. Investigations of the chemistry of the EBC discharge[136–138] have shown that the CO_2-laser working mixtures become degraded in the course of excitation, in view of the production of nitrogen oxides and oxygen. The CO_2-laser mixture degradation is compensated for in the USA by gradually replacing the degraded working medium with a fresh one, although expensive helium is irrecoverably lost thereby. Besides chemical regenerators[134], five-component laser mixtures CO_2:CO:N_2:Ar:He laser mixtures were proposed in Ref. 137, with a component ratio 1:1:9:5:4. This would permit a technological EBC CO_2 laser to operate many hours continuously without noticeable lowering of the lasing power and of the operating stability.

Lowering the operating temperature of a laser mixture permits a substantial increase of the laser efficiency to $\approx 24\%$ in the pulse-train regime[140] and to 20% in the cw regime.[142,148] Lowering the gas operating temperature, besides increasing the efficiency, permits also an increase of the gas working pressure, which is limited in cw EBC lasers by the increased collisional relaxation rate of the upper laser level at higher pressures.

Generally speaking, the working-medium pressure in a cw EBC CO_2 laser can be as high as 100 atm, but as the pressure is increased it becomes necessary the upper-laser-level relaxation whose rate increases as the square of the pressure. To increase the working pressure from the 0.1 atm typical of cw CO_2 EBCL to 1 atm, the pump power must be increased by ~ 100 times and the rate of replenishing the working gas in the operating volume must be increased to compensate for the heating of the laser mixture by the pumping.[23,248] When the temperature is lowered to 200 K, the population-inversion collision losses are sharply reduced, so that the CO_2 laser mixture pressure can be increased to 0.4 atm in the same operating loop even at the reasonable gas flow velocity ≈ 100 m/s.

FIAN calculations[138,148] of thermodynamic cycles with adiabatic compression and cooling of the working medium showed that in closed-loop turbocompressor systems it is possible, without change of efficiency, both to increase the

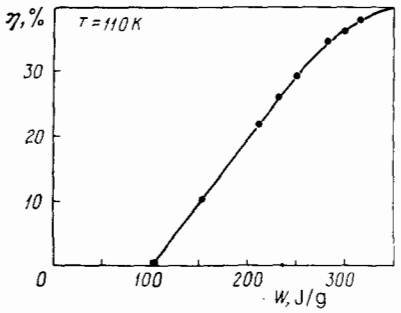

FIG. 32. Efficiency of EBNC cw 10-kW laser versus specific pump energy.

TABLE VIII. Characteristics of laser medium of a cw CO EBCL (P—pressure of working mixture at room temperature, u—gas-flow velocity, E/P—relative electric field intensity, w_u—laser-radiation energy output per unit mass).

Composition of mixture $CO:N_2:He:Ar:Xe$	P, Torr	u, m/s	E/P, W/cm·Torr	w_u, J/g	Efficiency, %
1:9:10:0:0	50	24	3	113	37
1:9:10:0:0.1	50	24	2.9	110	34
2:9:10:0:0.5	50	24	3.2	93	31
2:9:10:0:0.5	50	36	3.3	64	29
1:2:9:8:0	100	15	2.1	63	23
1:2:9:8:0	40	41	3.6	58	23
1:2:9:8:0	75	20	2.8	65	24

efficiency and to decrease drastically the dimensions and the power ratings of the apparatus.

Further increase of CO_2 EBCL efficiency calls for solving the problem of cooling the working medium. In principle there exist heat-recovery thermal cycles which, if implemented, can make the technical efficiency of a laser "at the output terminals" higher than the "physical" or even the quantum efficiency.[141,148] At any rate, closed refrigeration cycles based on the working gas or on systems in which an extraneous coolant is used can lead to development of high-power cw atmospheric-pressure CO_2 EBCL.

To obtain lasing, the CO-laser medium must be cooled[52] to ~ 100 K. The first cooled CO EBCL laser[133,135,152] had an emission power ~ 10 kW and a cw efficiency 37%; in the pulse-train regime the efficiency was[140] 44%. This laser employed a modernized circulation loop and the ionization and electric-supply systems of the CO_2 EBCL described in Refs. 25 and 133. The circulation loop of the CO EBCL contained a liquid-nitrogen cooled heat exchanger; this was the only laser element operating at liquid-nitrogen temperature. The heat exchanger was placed in the circulation loop (T, in Fig. 9) directly ahead of the discharge chamber. Figure 32 shows the dependence of the cw CO laser efficiency on the energy input per unit mass of the working mixture drawn through the excitation region. The basic characteristics of the laser are listed in Table VIII.

The electron-beam current density was maintained in these experiments at $6\,\mu A/cm^2$, and the electron energy at ≈ 200 keV. The characteristics of CO_2 and CO EBCL in respect to commercial technology and specific examples of implementation of technological processes are given in Ref. 143. Figure 33 shows the technological EBC laser assembly of Ref. 25.

7. CONCLUSION

Condensed- and compressed-gas lasers constitute a new class of high-power optical quantum generators that promise coherent emission of high quality and a laser-beam divergence approaching the diffraction limit. The discovery of new laser schemes and of multicomponent laser media, which permit development of pulsed, quasicontinuous, and cw lasing, with efficiency ranging from 2% (lasers on electronic transitions of atoms and molecules) in the visible up to 10–15% (excimer lasers) in the ultraviolet and up to 20–40% (CO_2 and CO EBCL) in the middle infrared band, will make possible the development of high-power laser systems for use in industry, for controlled thermonuclear fusion, and for scientific research.

In this review, based mainly on work performed in the

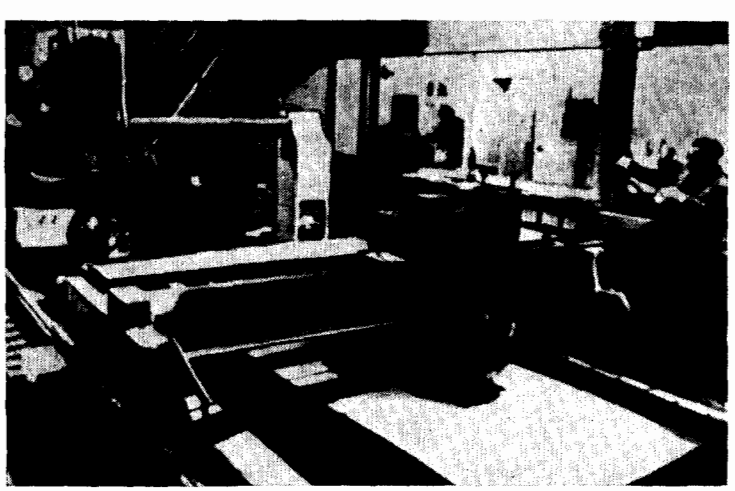

FIG. 33. Technological EBC laser assembly used in Ref. 143.

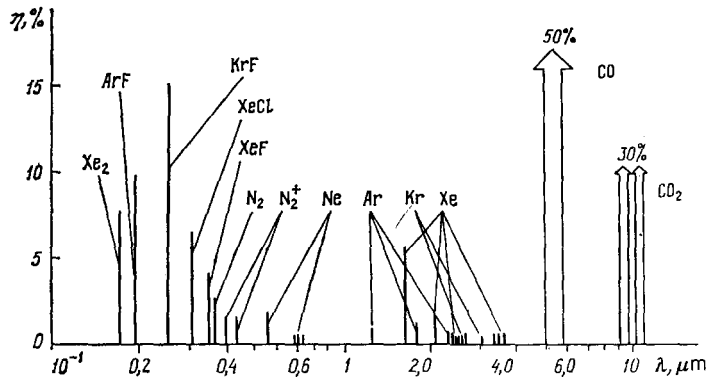

FIG. 34. Scheme of emission wavelengths and efficiencies of condensed- and compressed-gas lasers considered in the present review.

Quantum-Radiophysics Laboratory of FIAN, we have considered laser systems of large volume (compressed-gas waveguide lasers were excluded) and of high power, which generate directly and amplify laser radiation (Fig. 34). We have also left out compressed- and condensed-gas converters and Raman lasers operating mainly in various stimulated-emission modes.[144] The burgeoning development of research into condensed- and compressed-gas lasers offers evidence even now that this class of lasers can compete seriously with solid-state lasers when it comes to pulsed power, and with low-pressure gas lasers when it comes to efficiency and average laser power.

[1)]For glow discharge we have Pd = const, where P is the gas pressure and d is the characteristic dimension of the discharge region (of the tube diameter for longitudinal excitation or the distance between electrodes for transverse pumping). At high pressures it becomes therefore necessary to use capillaries. For example, at a gas pressure $P \gtrsim 10$ atm a glow discharge is stable only in a capillary of diameter $d \lesssim 1$ mm (see, e.g., Ref. 19).

[2)]Handbook of Nuclear Physics (transl. from the English by L. A. Artsimovich), Fizmatgiz, 1963, p. 361.

[3)]Excimer lasers without inert gases are also feasible, for example by using excimers of the metals Na_2, Hg_2, and others. For excimer lasers of highest power, however, an inert gas is a mandatory component.

[4)]Lasing at these wavelengths was first obtained in Ref. 129.

[1]N. G. Basov, in: Advances in Quantum Electronics, Columbia Univ. Press, N. Y., 1961, Vol. 2, p. 506.

[2]N. G. Basov, O. V. Bogdankevich, and A. G. Devyatkov, Dokl. Akad. Nauk SSSR **155**, 783 (1964) [Sov. Phys. Dokl. **9**, 288 (1964)].

[3]N. G. Basov, IEEE J. Quant. Electron. **QE-2**, 354 (1966).

[4]N. G. Basov, O. V. Bogdankevich, V. A. Danilychev, V. A. Devyatkov, G. N. Kashnikov, and N. P. Lantsov, Pis'ma Zh. Eksp. Teor. Fiz. **7**, 404 (1968) [JETP Lett. **7**, 317 (1968)].

[5]N. G. Basov, O. V. Bogdankevich, V. A. Danilychev, G. N. Kashnikov, O. M. Kerimov, and N. P. Lantsov, Kr. Soobshch. Fiz. FIAN No. 7, 68 (1970).

[6]V. A. Danilychev. Liquefied- and compressed-gas lasers. Author's abstract of doctoral dissertation, Lebedev Phys. Inst., Moscow, 1973.

[7]N. G. Basov, V. A. Danilychev, Yu. M. Popov, and D. D. Khodkevich, Pis'ma Zh. Eksp. Teor. Fiz. **12**, 473 (1970) [JETP Lett. **12**, 329 (1970)].

[8]N. G. Basov, V. A. Danilychev, and Yu. M. Popov, Kvant. Elektron. (Moscow), No. 1, 29, (1971) [Sov. J. Quant. Electron. **1**, 18 (1971). N. G. Basov, V. A. Danilychev, and Yu. M. Popov, Ogo Butsuri (Japan), **40**, No. 2, 139 (1971). Presentation at 6th Internat. Quantum Electronics Conf., Kyoto, Japan, September 1970.

[9]N. G. Bosov, É. M. Belenov, V. A. Danilychev, and A. F. Suchkov, Kvant. Elektron. (Moscow), No. 3, 121 (1971) [Sov. J. Quant. Electron. **1**, 308 (1971)].

[10]N. G. Bosov, É. M. Belenov, V. A. Danilychev, O. M. Kerimov, I. B. Kovsh, and A. F. Suchkov, Pis'ma Zh. Eksp. Teor. Fiz. **14**, 421 (1971) [JETP Lett. **14**, 285 (1971)].

[11]N. G. Basov, É. M. Belenov, V. A. Danilychev, and A. F. Suchkov, Vestn. AN SSSR, No. 3, 12 (1972).

[12]N. G. Basov, É. M. Belenov, V. A. Danilychev, O. M. Kerimov, I. B. Kovsh, A. S. Podsosonnyĭ, and A. F. Suchkov, Electron Beam Controlled Lasers, FIAN Preprint No. 56, Moscow, 29 April 1972.

[13]N. G. Basov, É. M. Belenov, V. A. Danilychev, and A. F. Suchkov, Zh. Eksp. Teor. Fiz. **64**, 108 (1973) [Sov. Phys. JETP **37**, 58 (1973)].

[14]N. G. Basov, É. M. Belenov, V. A. Danilychev, and A. F. Suchkov, Usp. Fiz. Nauk **114**, 213 (1974) [Sov. Phys. Usp. **17**, 293 (1974)].

[15]V. A. Danilychev and D. D. Khodkevich, Prib. Tekh. Eksp. No. 3, 157 (1971).

[16]K. C. Rhodes, ed., Excimer Lasers, Springer, 1977.

[17]Yu. V. Afanas'ev É. M. Belenov, O. V. Bogdankevich, V. A. Danilychev, S. G. Darznek, and A. F. Suchkov, Kr. Soobshch. Fiz. FIAN, No. 11, 23 (1970).

[18]N. G. Basov, É. M. Belenov, V. A. Danilychev, and A. F. Suchkov, Kvant. Elektron. (Moscow), No. 3, 121 (1971) [Sov. J. Quant. Electron. **1**, 306 (1971)].

[19]L. B. Loeb, Fundamental Processes of Electrical Discharges in Gases, Wiley, 1939.

[20]B. B. Rossi and H. H. Staub, Inization Chambers and Counters, McGraw, 1949.

[21]N. G. Basov, I. K. Babaev, V. A. Danilychev, M. D. Mikhailov, V. K. Orlov, V. V. Savel'ev, V. G. Son, and N. V. Cheburkin, Kvant. Electron. (Moscow) **6**, 72 (1979) [Sov. J. Quant. Electron. **9**, 40 (1979).

[22]N. G. Basov, É. M. Belenov, V. A. Danilychev, O. M. Kerimov, I. B. Kovsh, and A. F. Suchkov, Zh. Tekh. Fiz. **42**, 2540 (1972) [Sov. Phys. Tech. Phys. **17**, 1976 (1973)].

[23]E. P. Glotov, V. A. Danilychev, and N. V. Cheburkin, Trudy FIAN SSSR, 142, 3 (1983).

[24]V. V. Aleksandrov and A. M. Soroka, *ibid.* p. 46.

[25]N. G. Basov, E. P. Glotov, V. A. Danilychev, Yu. N. Smirnov, A. M. Soroka, and V. I. Yugov. High Power Electroionization CO_2 Lasers for Laser Technology, in: Proc. Internat. Conf. On Lasers-81, Dec. 14–18, 1981, New Orleans, LA, 1981, p. 611.

[26]A. V. Eletsiĭ and B. M. Smirnov, Dokl. Akad. Nauk SSSR 190, 809 (1970) [Sov. Phys. Dokl. **15**, 109 (1970)].

[27]N. A. Blinov, I. A. Leont'ev, V. K. Orlov, and N. V. Cheburkin, Kvant. Elektron. (Moscow) **4**, 1808 (1977) [Sov. J. Quant. Electron **7**, 1029 (1977)].

[28]V. M. Andriyakhin, E. P. Velikhov, *et al.*, Pis'ma Zh. Eksp. Teor. Fiz. **15**, 637 (1972) [JETP Lett. **15**, 451 (1972)].

[29]G. A. Batyrbekov, V. A. Danilychev, *et al.*, Kvant. Elektron. (Moscow) **4**, 1761 (1977) [Sov. J. Quant. Electron. **7**, 998 (1977)].

[30]Yu. A. Tkach, Ya. B. Faĭnberg, L. I. Bolotin, Ya. Ya. Besarab, N. P. Gadetskiĭ, Yu. N. Chernen'kiĭ, and A. K. Berezin, Pis'ma Zh. Eksp. Teor. Fiz. **6**, 956 (1967) [JETP Lett. **6**, 371 (1967)].

[31]V. M. Andriyakhin, E. P. Velikhov, S. A. Golubev, S. S. Krasil'nikov, A. M. Prokhorov, V. L. Pis'mennyĭ, and A. G. Rakhimov, *ibid.* **8**, 346 (1968) [**8**, 214 (1968)].

[32]S. A. Golubev, V. D. Pis'mennyĭ, T. V. Rakhimova, and A. G. Rakhimov, Zh. Eksp. Teor. Fiz. **62**, 458 (1972) [Sov. Phys. JETP **35**, 244 (1972)].

[33]G. G. Dolgov-Savel'ev, V. V. Kuznetsov, Yu. L. Koz'minykh, and A. M. Orshitz, Zh. Prikl. Spektrosk. **12**, 737 (1970).

[34]See Ref. 26.

[35]A. M. Prokhorov, N. P. Datskevich, E. K. Karlova, N. V. Karlov, B. N. Koval'chuk, Yu. B. Konev, N. N. Kononov, I. V. Kochetov, G. P. Kuz-

'min, G. A. Mesyats, S. M. Nikiforov, and V. G. Pevgov, Kvant. Elektron. (Moscow) **4**, 457 (1977) [Sov. J. Quant. Electron. **7**, 258 (1977).
[36]N. G. Basov, V. A. Danilychev, V. A. Dolgikh, O. M. Kerimov, A. N. Lobanov, A. S. Podsosonnyĭ, and A. F. Suchkov, *ibid.* **2**, 28 (1975) [**5**, 13 (1978)].
[37]A. V. Johnson, D. B. Gerardo, and R. E. Palmer, *ibid.* **3**, 914 (1976) [**6**, 495 (1976)].
[38]F. G. Houtermans, Helv. Phys. Acta **33**, 933 (1960).
[39]Y. Tanaka, Sci. Papers, Inst. Phys. Chem. Res. (Tokyo) **39**, 465 (1942).
[40]J. Jortner, L. Meger, S. A. Rice, and E. G. Wilson, J. Chem. Phys. **42**, 4250 (1965).
[41]P. G. Wilkinson, Can. J. Phys. **45**, 1715 (1967).
[42]Y. J. Tanaka, J. Opt. Soc. Amer. **45**, 710 (1955).
[43]A. Sagres and C. S. Wu, Rev. Sci. Instrum. **28**, 758 (1957).
[44]A. G. Molchanov, A. G. Poluektov, and Yu. M. Popov, Fiz. Tverd. Tela (Leningrad) **9**, 3363 (1967).
[45]N. G. Basov, E. M. Balashov, O. V. Bogdankevitch, V. A. Danilychev, G. N. Kashnikov, N. P. Lantzov, and D. D. Khodkevich, in: Intern. Conf. on Luminescence, Newark, Del., August 25–29 (1969). J. Luminescence **1**, 834 (1970).
[46]O. V. Bogdankevich, V. A. Danilychev, G. N. Kashnikov, O. M. Kerimov, and N. P. Lantsov, Cathodoluminescence of Condensed Xenon: FIAN Preprint No. 9, Moscow, 1970.
[47]V. A. Danilychev, G. N. Kashnikov, and Yu. M. Popov. Photoluminescence of Condensed Xenon in the Liquid-Crystal Phase-Transition Region, FIAN Preprint No. 136, Moscow, 1970.
[48]N. G. Basov, E. P. Glotov, V. A. Danilychev, V. A. Dolgikh, A. M. Kerimov, Yu. F. Myznikov, A. M. Soroka, G. Yu. Tamanyan, and N. G. Cheburkin, Kvant. Elektron. (Moscow), **11**, 1162 (1984) [Sov. J. Quant. Electron. **14**, 784 (1984)].
[49]M. D. Baranov, S. G. Burdin, V. A. Danilychev, and O. M. Kerimov, *ibid.* **2**, 1997 (1975) [**5**, 1084 (1975)].
[50]N. G. Basov, A. N. Brunin, S. G. Burdin, V. A. Danilychev, A. G. Degtyarev, V. A. Dolgikh, O. M. Kerimov, A. N. Lobanov, and A. F. Suchkov, High-Pressure Gas Lasers Based on Electronic Transitions of Molecules, FIAN Preprint No. 23, Moscow, 1977.
[51]V. A. Danilychev, O. M. Kerimov, and I. B. Kovsh, High-Pressure Molecular-Gas Lasers, Itogi Nauki, "Radiotekhnika" (Science Summaries, Radio Engineering), Vol. 12 VINITI, 1977.
[52]V. A. Danilychev, O. M. Kerimov, and I. B. Kovsh, Trudy FIAN **85**, 49 (1976).
[53]V. A. Danilychev, V. A. Dolgikh, and O. M. Kerimov, *ibid.* **142**, 172 (1983).
[54]H. A. Kowhler, L. G. Ferderber, D. L. Readhead, and P. G. Ebert, Appl. Phys. Lett. **21**, 198 (1972).
[55]G. B. Gerardo and A. W. Johnson, IEEE J. Quant. Electron. **QE-9**, 748 (1973).
[56]P. W. Hoff, G. C. Swingle, and C. K. Rhodes, Opt. Commun. **8**, 128 (1973).
[57]P. W. Hoff, G. C. Swingle, and C. K. Rhodes, Appl. Phys. Lett. **23**, 245 (1973).
[58]W. M. Hughes, G. Shannon, and R. Hunter, *ibid.* **24**, 488 (1974).
[59]A. W. Johnson and G. B. Gerardo, J. Chem. Phys. **59**, No. **4** (1973).
[60]W. M. Hughes, G. Shannon, A. Kolb, E. Ault, and M. Bhaumik, Appl. Phys. Lett. **23**, 385 (1973).
[61]B. M. Smirnov, Usp. Fiz. Nauk **139**, 53 (1983) [Sov. Phys. Usp. **26**, 31 (1983)].
[62]A. V. Eletskiĭ and B. M. Smirnov, Physical Processes in Gas Lasers [in Russian], Energoatomizdat, 1985, Chap. 7.
[63]D. C. Lorents, Physica (Utrecht), **C82**, 19 (1976).
[64]R. S. Mulliken, J. Chem. Phys. **52**, 5170 (1970).
[65]N. G. Basov, E. P. Glotov, V. A. Danilychev, A. I. Milanich, and A. M. Soroka, Pis'ma Zh. Tekh. Fiz. **5**, 449 (1979) [Sov. J. Tech. Phys. Lett. **5**, 183 (1979)].
[66]V.A. Danilychev, E. P. Glotov, A. I. Milanich, and A. M. Soroka, IEEE J. Quant. Electron. **QE-16**, 154 (1980).
[67]L. A. Kuznetsov *et al.*, Vestnik MGU, Ser. II, "Khimiya," No. 19, (1964).
[68]M. F. Golde and B. A. Trush, Chem. Phys. Lett. **29**, 486 (1974).
[69]G. E. Velazco and D. W. Setser, J. Chem. Phys. **62**, 1990 (1975).
[70]G. G. Ewing and Ch. A. Brau, Phys. Rev. **A12**, 129 (1975).
[71]M. F. Golde, J. Mol. Spectr. **58**, 261 (1975).
[72]Ch. A. Brau and G. G. Ewing, J. Chem. Phys. **63**, 4640 (1975).
[73]S. K. Searles and G. A. Hart, Appl. Phys. Lett. **27**, 243 (1975).
[74]G. C. Tisone, A. K. Hays, and G. M. Hoffman, Opt. Commun. **15**, 188 (1975).
[75]E. R. Ault, Jr., R. C. Bradford, and M. L. Bhaumik, Appl. Phys. Lett. **27**, 413 (1975).
[76]G. G. Ewing and Ch. A. Brau, *ibid.* p. 350.
[77]Ch. A. Brau and G. G. Uding, *ibid.* p. 435.
[78]M. Rokni, J. Mangano, G. A. Jacob, and G. G. Hsia, IEEE J. Quant. Electron. **QE-14**, 464 (1978).
[79]J. Goldhar, K. S. Jancaitis, and J. R. Murray, in: Technical Digest CLEO-84, Washington, DC: OSA, 185, TbB2, p. 186.
[80]L. A. Rosocha, in: Advanced Program CLEO-85, Washington, DC, OSA, 1985, ThL2, p. 63.
[81]N. G. Basov, A. N. Brunin, V. A. Danilychev, A. G. Degtyarev, V. A. Dolgikh, and O. M. Kerimov, Pis'ma Zh. Tekh. Fiz. **2**, 1057 (1976) [Sov. J. Tech. Phys. Lett. **2**, 417 (1976)].
[82]N. G. Basov, A. N. Brunin, V. A. Danilychev, A. G. Degtyarev, V. A. Dolgikh, and O. M. Kerimov, Kvant. Electron. (Moscow) **4**, 1595 (1977) [Sov. J. Quant. Electron. **7**, 908 (1977)].
[83]N. G. Basov, V. A. Danilychev, V. A. Dolgikh, O. M. Kerimov, V. S. Lebedev, and A. G. Molchanov, Pis'ma Zh. Eksp. Teor. Fiz. **26**, 20 (1977) [JETP Lett. **26**, 16 (1977)].
[84]N. G. Basov, V. A. Danilychev, V. A. Dolgikh, O. M. Kerimov, V. S. Lebedev, and A. G. Molchanov, Kvant. Elektron. (Moscow) **6**, 1010 (1979) [Sov. J. Quant. Electron. **9**, 593 (1979)].
[85]G. A. Mangano, J. H. Jacob, M. Rokni, and A. Hawryluk, Appl. Phys. Lett. **31**, 26 (1977).
[86]M. Rokni, J. H. Jacob, and G. A. Mangano, Phys. Rev. **A16**, 2216 (1977).
[87]A. M. Hawryluk, G. A. Mangano, and J. H. Jacob, Appl. Phys. Lett. **31**, 164 (1977).
[88]G. C. Hsia, G. A. Mangano, J. H. Jacob, and M. Rokni, *ibid.* **34**, 308 (1979).
[89]D. C. Lorents, D. L. Huestis, M. V. McCusker, H. H. Nakano, and R. M. Hill, J. Chem. Phys. **68**, 4657 (1978).
[90]M. L. Bhaumik, R. S. Bradford, and E. R. Ault, Jr., Appl. Phys. Lett. **28**, 23 (1976).
[91]Yu. V. Afanasiev, N. G. Basov, V. A. Danilychev, and A. G. Molchanov, Laser Fusion and Driver Problem, FIAN Preprint No. 258, Moscow, 1983, p. 39.
[92]E. P. Glotov, V. A. Danilychev, and V. D. Zvorykin, Trudy FIAN **116**, 202 (1980).
[93]V. A. Danilychev, O. M. Kerimov, and A. I. Milanich, Presentation at Lasers and Applications International Conference and School, LA1CS82, Bucharest, September, 1982.
[94]N. G. Basov, A. N. Brunin, V. A. Danilychev, A. G. Degtyarev, V. A. Dolgikh, A. M. Kerimov, and A. N. Lobanov, Pis'ma Zh. Tekh. Fiz. 1976, **2**, 337 (1976) [Sov. J. Tech. Phys. Lett. **2**, 137 (1976).
[95]N. G. Basov, A. N. Brunin, V. A. Danilychev, V. A. Dolgikh, O. M. Kerimov, and A. N. Lobanov, Kvant. Elektron. (Moscow) **3**, 1727 (1976) [Sov. J. Quant. Electron. **6**, 934 (1976)].
[96]V. A. Danilychev, V. M. Zubkov, O. M. Kerimov, A. I. Milanich, and S. I. Sagitov, *ibid.* **5**, 2027 (1978) [**8**, 1142 (1978)].
[97]N. G. Basov, V. A. Danilychev, V. A. Dolgikh, O. M. Kerimov, A. N. Lobanov, and A. F. Suchkov, Pis'ma Zh. Eksp. Teor. Fiz. **20**, 124 (1974) [JETP Lett. **20**, 53 (1974)].
[98]S. K. Searles and G. A. Hart, Appl. Phys. Lett. **25**, 79 (1974).
[99]E. R. Ault, M. L. Bhaumik, and N. T. Olson, J. Quant. Electron. **QE-10**, 624 (1974).
[100]R. A. Gutcheck, R. M. Hill, D. C. Lorents, D. L. Huestis, M. V. McCluster, and H. H. Nakano, J. Appl. Phys. **46**, 3106 (1975).
[101]D. A. Leonard, Appl. Phys. Lett. 7, 4 (1965).
[102]R. W. Dreyfus and R. T. Hodson, *ibid.* **20**, 195 (1972).
[103]E. L. Paterson, J. B. Gerardo, and A. W. Johnson, *ibid.* **21**, 293 (1972).
[104]A. V. Eletskiĭ and B. M. Smirnov, in: Gas Lasers [in Russian], Atomizdat, 1971, p. 151.
[105]N. G. Basov, A. N. Brunin, V. A. Danilychev, V. A. Dolgikh, O. M. Merimov, A. N. Lobanov, A. N. Sagitov, and A. F. Suchkov, Kvant. Elektron. (Moscow) **2**, 2238 (1975) [Sov. J. Quant. Electron. **5**, 1210 (1975)].
[106]A. N. Brunin, V. A. Danilychev, V. A. Dolgikh, O. M. Kerimov, L. A. Vasil'ev, G. G. Dolgov-Savel'ev, and L. L. Kozorovitskii, *ibid.*, p. 1591 [869].
[107]A. N. Brunin, V. A. Danilychev, V. A. Dolgikh, O. M. Kerimov, and A. N. Lobanov, *ibid.* **3**, 2344 (1976) [**6**, 1275 (1976)].
[108]O. P. Bochkova, N. V. Chernysheva, and Yu. A. Tolmachev, Opt. Spektr. **36**, 36 (1974).
[109]C. B. Collins, A. J. Cunningham, and M. Stockton, Appl. Phys. Lett. **25**, 344 (1974).
[110]C. B. Collins, J. M. Carral, F. W. Lee, and A. J. Cunningham, *ibid.* **28**, 555 (1976).

[111]N. G. Basov, A. Yu. Aleksandrov, V. A. Danilychev, V. A. Dolgikh, O. M. Kerimov, Yu. F. Myznikov, I. G. Rudoi, and A. M. Soroka, Pis'ma Zh. Eksp. Teor. Fiz. **42**, 39 (1985) [JETP Lett. **42**, 47 (1985)].
[112]P. Chapovsky, V. N. Lisitsyn, and A. R. Sorokin, Opt. Commun. **16**, 33 (1976).
[113]L. A. Newman and T. A. DeTemple, Appl. Phys. Lett. **27**, 678 (1975).
[114]V. F. Losev and V. F. Tarasenko, Kvant. Elektron. (Moscow) **7**, 663 (1980) [Sov. J. Quant. Electron. **10**, 381 (1980)].
[115]A. M. Voinov, L. E. Dovbysh, V. N. Krivonosov, S. P. Mel'nikov, I. V. Podmoshenskiĭ, and A. A. Sinyanskii, Pis'ma Zh. Tekh. Fiz. **7**, 1016 (1981) [Sov. Tech. Phys. Lett. **7**, 437 (1981)].
[116]N. G. Basov, V. V. Baranov, A. Yu. Chugunov, V. A. Danilychev, A. Yu. Dudin, I. V. Kholin, N. N. Ustinovsky, and D. A. Zagarny, IEE. J. Quant. Electron.
[117]N. G. Basov, A. Yu. Chugunov, V. A. Danilychev, I. V. Kholikn, and N. N. Ustinovsky, *ibid.* **QE-19**, 129 (1983).
[118]V. V. Baranov, N. G. Basov, V. A. Danilychev, A. Yu. Dudin, D. Z. Zayarnyĭ, N. N. Ustinovskiĭ, I. V. Kholin, and A. Yu. Chugunov, Pis'ma Zh. Eksp. Teor. Fiz. **39**, 426 (1984) [JETP Lett. **39**, 515 (1984)].
[119]N. G. Basov, V. A. Danilychev, A. Yu. Dudin, D. A. Zayarnyĭ, N. N. Ustinovskiĭ, I. V. Kholin, and A. Yu. Chugunov, Kvant. Elektron. (Moscow) **11**, 1722 (1984) [Sov. J. Quant. Electron. **14**, 1158 (1984)].
[120]P. L. Chopovsky, V. N. Lisitsyn, and A. R. Sorokin, Opt. Commun. **16**, 33 (1976).
[121]W. B. Bridges and A. N. Chester, Appl. Opt. **4**, 573 (1965).
[122]D. Schmieder, D. J. Brink, T. I. Salamon, and E. G. Jones, Opt. Commun. **36**, 223 (1981).
[123]F. V. Dunkin, V. I. Derzhiev, G. A. Mesyats, V. S. Skakun, V. F. Tarasenko, and S. I. Yakovlenko, Kvant. Elektron. (Moscow) **12**, 245 (1985) [Sov. J. Quant. Electron. **15**, 159 (1985)].
[124]L. Frommhold and M. A. Biondi, Phys. Rev. **5**, 244 (1969).
[125]L. A. Vainshtein, I. I. Sobel'man, and E. A. Yukov, *Excitation of Atoms and Broadening of Spectral Lines*, Springer, 1981.
[126]L. I. Virin, R. V. Dzhagatspanyan, G. V. Karachevtsev, *et al.*, Ion-Molecular Reactions in Gases [in Russian], Nauka, 1979.
[127]B. M. Smirnov, Excited Atoms [in Russian], Energoizdat, 1982.
[128]R. Deloche, A. Confalon, and M. Chevet, Compt. Rend. **267**, 934 (1968).
[129]N. G. Basov, V. V. Baranov, V. A. Danilychev, A. Yu. Dudin, D. A. Zayarnyĭ, N. N. Ustinovskiĭ, I. V. Kholin, and A. Yu. Chugunov. Kvant. Elektron. (Moscow) **12**, 1521 (1985) [Sov. J. Quant. Electron. **15**, 1004 (1985)].
[130]E. P. Velikhov, V. D. Pis'mennyĭ, and A. T. Rakhimov, Usp. Fiz. Nauk **122**, 419 (1977) [Sov. Phys. Usp. **20**, 586 (1977)].
[131]E. P. Velikhov, S. A. Kolubev, A. S. Kovalev, I. G. Persiantsev, V. D. Pis'mennyĭ, A. T. Rakhimov, and T. V. Rakhimova, Fiz. Plazmy **1**, 847 (1975) [Sov. J. Plasma Phys. **1**, 463 (1975)].
[132]A. V. Anokhin, I. K. Babaev, N. A. Blinov, A. F. Grachev, G. G. Dolgov-Savel'ev, M. D. Mikhaĭlov, V. K. Orlov, V. F. Razumtsev, V. V. Savel'ev, and N. V. Cheburkin, Kvant. Elektron. (Moscow) **2**, 211 (1975) [Sov. J. Quant. Electron. **5**, 133 (1975)].
[133]A. P. Averin, N. G. Basov, L. A. Vasil'ev, E. P. Glotov, M. M. Golovin, V. A. Danilychev, O. M. Kerimov, M. M. Malysh, A. M. Soroka, N. V. Cheburkin, N. D. Ustinov, and V. I. Yugov, *ibid.* **9**, 2357 (1982) [**12**, 1537 (1982)].
[134]V. A. Alekseev, I. K. Babaev, Z. E. Bagdasarov, N. G. Basov, V. A. Danilychev, *et al.* Svaroch. proz-vo No. 9, 12 (1979).
[135]A. P. Averin, N. G. Basov, E. P. Glotov, V. A. Danilychev, L. N. Darchuk, O. M. Kerimov, I. N. Matveev, A. M. Soroka, N. D. Ustinov, N. V. Cheburkin, and V. I. Yugov, Kvant. Elektron. (Moscow) **10**, 2090 (1983) [Sov. J. Quant. Electron. **13**, 1391 (1983)].
[136]N. G. Basov, V. A. Danilychev, and V. I. Panteleev, Khim. vys. energ. **12**, 839 (1978).
[137]A. P. Averin, N. G. Basov, E. P. Glotov, V. A. Danilychev, Yu. S. Leonov, N. N. Sazhina, A. M. Soroka, and V. I. Yugov, Pis'ma Zh. Tekh. Fiz. **7**, 769 (1981) [Sov. J. Tech. Phys. Lett. **7**, 331 (1981)].
[138]A. P. Averin, N. G. Basov, E. P. Glotov, V. V. Gurov, V. A. Danilychev, M. M. Malysh, V. N. Mekryakov, S. G. Perlov, N. N. Sazhina, N. I. Snigireva, A. M. Soroka, I. M. Fadyushin, and V. N. Yugov, Dokl. Akad. Nauk SSSR **266**, 844 (1982) [Sov. Phys. Dokl. **27**, 867 (1982)].
[139]E. V. Lcke, E. D. Hoag, and R. A. Hella, IEE J. Quant. Electron. **QE-8**, 132 (1972).
[140]N. G. Basov, V. V. Bashenko, E. P. Glotov, S. G. Gorny, V. A. Danilychev, G. N. Karpov, V. A. Lopota, M. M. Malyche, I. G. Ruodoi, V. A. Saburov, and A. M. Soroka, *ibid.* (1985).
[141]V. V. Aleksandrov, N. G. Basov, E. P. Glotov, V. A. Danilychev, V. N. Koterov, and A. M. Soroka, Pis'ma Zh. Tekh. Fiz. **6**, 449 (1980) [Sov. J. Tech. Phys. Lett. **6**, 193 (1980)].
[142]A. P. Averin, N. G. Basov, E. P. Glotov, V. A. Danilychev, O. M. Merimov, I. N. Matveev, A. M. Soroka, N. D. Ustinov, V. I. Yugov, and N. V. Cheburkin, Izv. AN SSSR, ser. fiz. **47**, 1519 (1983).
[143]N. G. Basov, and V. A. Danilychev, High-Power Lasers in Technology, in: Science and Humanity [in Russian], Znanie, 1985.
[144]A. Z. Grasyuk, Kvant. Elektron. (Moscow) No. 3, 485 (1974) [Sov. J. Quant. Electron. **4**, 269 (1974)].
[145]N. G. Basov, A. Yu. Aleksandrov, V. A. Danilychev, V. A. Dolgikh, O. M. Kerimov, Yu. F. Myzinkov, I. G. Rudoĭ, and A. M. Soroka, Pis'ma Zh. Eksp. Teor. Fiz. **41**, 156 (1985) [JETP Lett. **41**, 191 (1985)].
[146]V. V. Baranov, N. G. Basov, V. A. Danilychev, A. Yu. Dudin, D. A. Zayarnyĭ, N. N. Ustinovskiĭ, I. V. Kholin, and A. Yu. Chugunov, Kvant. Elektron. (Moscow) **12**, 2307 (1985) [*sic*].
[147]J. G. Basov, É. M. Belenov, V. A. Danilychev, and A. F. Suchkov, Pis'ma Zh. Eksp. Teor. Fiz. **14**, 545 (1971) [JETP Lett. **14**, 375 (1971)].
[148]N. G. Basov, V. A. Danilychev, E. P. Glotov, and A. M. Soroka, Trudy FIAN SSSR, **142**, 95 (1983).

Translated by J. G. Adashko
Edited by R. T. Beyer