V. F. Kitaeva, A. S. Zolot'ko, and N. N. Sobolev. *Self-focusing of laser radiation in the case of a Fredericks transition.* A new nonlinear phenomenon was discovered at the Physics Institute of the Academy of Sciences (FIAN) in 1980 in experiments with a homeotropically oriented OCBP (octylcyanobiphenyl) liquid crystal.[1]

At comparatively low powers of a laser beam (~10 mW) passing through a crystal (a diagram of the experimental setup and the geometry of the experiment appear in Fig. 1) an enormous (factor of ~150) increase in the divergence of the beam was observed. In addition, the transmitted beam had a complex structure. A system of rings (~30–40) the distances between which increased with increasing diameter was observed on a screen set up perpendicular to the laser beam.

Even the very first experiments indicated that this phenomenon presents all the basic features of the effect discovered by (and named for) Fredericks in the 1930s in his study of nematic liquid crystals (NLC) in constant magnetic fields: the reorientation of NLC molecules in constant and low-frequency external fields.[2-4]

It was established[1,5,6] that the nature of the ring pattern observed depends on the power P of the laser beam, i.e., the electric field E, on the polarization of the incident light, the angle α between the director **n** of the oriented crystal and the wave vector **k** of the incident radiation, and the temperature t and thickness L of the crystal.

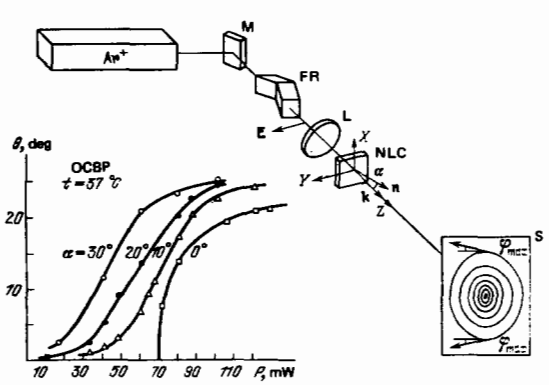

FIG. 1. Diagram of experimental setup, geometry of experiment, and curves of beam angular divergence after transmission through crystal plotted against laser radiated power. Ar^+—argon ion laser; M—turning mirror; FR—Fresnel biprism; NLC—liquid crystal; S—screen. (**k** is the wave vector of the incident radiation, **n** is the director (the orientation direction of the NLC molecules), and α is the angle between **n** and **k**.

Figure 1 shows curves of beam divergence plotted against incident-radiation power as obtained for an OCBP crystal.

But what have we observed that is characteristic of the Fredericks effect?

First of all, the existence of a threshold value $E_{thr}(P_{thr})$ at $\alpha = 0$ (**n**||**k**), at which the pattern appeared suddenly after a time lag ($T_L = f(P)$) at any orientation of **E** in the plane perpendicular to **k**. Further, this threshold field depends on the thickness of the specimen. It is approximately $\sqrt{3}$ times larger in a specimen 50 μm thick than in a specimen 150 μm thick. For a nonzero angle α between **n** and **k**, and when the polarization of the incident light is such that the vector **E** lies in the same plane as **n** and **k**, there is no threshold, and the orientation effect is observed at much lower fields. The beam divergence θ and the number of rings N saturate at high fields, i.e., the orientation effect is saturated.

The values of the light-wave field ($E \sim 10^2$–10^3 V/cm) and the times T_L (from a few seconds into the tens of minutes, depending on the power P) were found to be characteristic of the Fredericks transition, i.e., the same basic patterns in the behavior of the NLC were observed in the light field as in constant external fields.

Let us now consider what broadens the beam and where do the rings originate.

Obviously, not only does the light beam act on the crystal, but the crystal also acts on the light beam, since the reorientation of the molecules affects the optical properties of the NLC (the extraordinary-wave refractive index), which is a uniaxial crystal. And self-action effects may develop as a result of the change in the optical properties of the substance in the light beam.[7,8,9] This is responsible for the observed enormous increase in the divergence of the laser beam and for the appearance of the aberration pattern.

The aberration theory of the self-focusing of light beams in homeotropically oriented NLCs that developed under the influence of the experimental results obtained[10,11] made it possible to derive specific expressions for the basic parameters of the nonlinear aberrations—the total nonlinear beam divergence and the number of aberration rings—as functions of the electric field intensity of the light wave on the beam axis at normal beam incidence on the crystal. Comparison of these expressions with the experiment showed that the theoretical curves correctly convey the nature of the

variation of the number of aberration rings and the divergence with laser-beam power.[1)]

Later studies[6,12,13] showed that the aberration pattern carries a great deal of useful information and, specifically, information on the sign of the self-action.

It was observed that the intensity of the central spot of the aberration pattern varies in the process of its formation and that the nature of the variations depends on the position of the crystal with respect to the waist of the laser beam (which is formed by the lens L, see Fig. 1). This circumstance made it possible to determine the sign of the self-action and to show experimentally that the variation of the extraordinary-wave refractive index on reorientation of the NLC molecules in the light-wave field leads to self-focusing of the laser beam.[13]

Further: rays deflected through small angles as a result of self-focusing interfere at the center of the aberration pattern. These rays are on the axis and periphery of the beam. The phase difference between them varies with time, since the molecules do not reorient themselves instantaneously. It is at those times when it is a multiple of 2π that the intensity is highest. This makes it clear that study of the time dependence of the intensity at the center of the aberration pattern is a good way to investigate the dynamics of NLC-molecule reorientation.

Still another interesting phenomenon that accompanies aberrational self-focusing is rotation of the polarization plane. The polarization of rays that have passed through the crystal is different from that of the incident radiation.[6] It was established that linearly polarized incident radiation becomes elliptically polarized at $0 \leqslant \alpha \leqslant 20°$ and remains linearly polarized at $\alpha \geqslant 20°$, although the polarization plane rotates. The rotation angle φ depends on the angle α, the angle θ of the nonlinear beam divergence, and the angle Ψ reckoned in the plane of the perpendicular section through the beam from the polarization plane of the incident radiation. The direction of the semimajor axis of the ellipse also depends on the same angles (case $0 \leqslant \alpha \leqslant 20°$). The rotation of the polarization plane (of the semimajor axis of the ellipse) is caused by the curving of the rays in self-focusing. Figure 2 explains qualitatively how this happens. This simple analysis makes it possible to calculate the angle φ as a function of θ. The calculated results agree satisfactorily with experiment.[13]

There is still another peculiarity of the observed aberration pattern that we should point out.

It was observed already in Ref. 1 that the aberration rings are oval in shape. They are elongated in the direction perpendicular to the polarization direction of the incident radiation, and this elongation amounts to

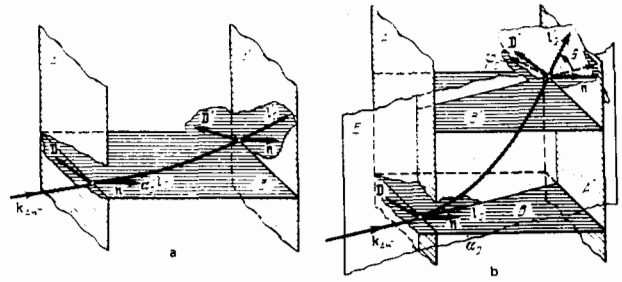

FIG. 2. Change in polarization of rays deflected in horizontal (B) plane (a) and in vertical (E) plane (b) (rotation of polarization plane). AA'—walls of NLC cell; BB'—horizontal planes; **n**—director; I—unit vector tangent to ray; I_0 at entrance and I_0' at exit wall of cell (within crystal); D, D′—electrical displacement vectors (at the entrance wall of the cell for both rays considered—that deflected in the horizontal plane B and that deflected in the vertical plane E); D lies in plane B; at the exit wall, D′ for the beam deflected in B also lies in B, while D′ for the ray deflected in E lies in plane C); θ—angle of deflection of ray from beam axis; α_0—angle between **k** and **n** (in crystal); φ_0—rotation angle of polarization plane in crystal.

10–40%, depending on the angle α and the laser-beam power P. Ring-elongation estimates made on the assumption that the light beam is Gaussian in shape and using a variational technique[13] indicated that it is due to the fact that the Franck constant K_2 is smaller for the crystals studied than the constants K_1 and K_3, i.e., the properties of the liquid crystal itself are reflected in the aberration pattern.

Let us sum up.

The light field causes reorientation of the NLC molecules and, in homeotropically oriented specimens with normal incidence of the light beam we observe the same patterns as in constant and quasiconstant external fields. However, it is natural that the analogy is not complete. First of all, the threshold values E_{thr} differ. They are larger in a light beam.[14,15]

The new distribution of the NLC molecules produced by the beam causes aberrational self-focusing, which, as is now clear, is a new and very important tool for investigation of liquid crystals. It enables us to study both the phenomenon itself (the dynamics of reorientation, relaxation processes) and the properties of the NLC—its elastic properties (using the transition threshold[15] and the nature of the aberration rings), viscosity, reorientation of molecules at walls (from the rotation of the polarization plane), etc.

Thus, a new nonlinear phenomenon has been discovered and a way has been found to investigate both the phenomenon itself and the properties of nematic liquid crystals.

---

1)The self-focusing effect in the case that the director field is distorted by the electric field of a light wave in planar NLC specimens at small rotation angles of the director (the divergence of the laser beam was increased by a factor ~2) was discussed theoretically and experimentally in Ref. 9.

[1]A. S. Zolot'ko, V. F. Kitaeva, N. Kroo, N. N. Sobolev, and L. Csillag, Pis'ma Zh. Eksp. Teor. Fiz. **32**, 170 (1980) [JETP [JETP Lett. **32**, 158 (1980)].

[2]V. Fredericks and N. Zolina, ZhRFKhO, Ser. Fiz. **62**, 457 (1930).

[3]P. G. de Gennes, The Physics of Liquid Crystals, Oxford, 1974.

[4]L. M. Blinov, Élektro- i magnitooptika zhidkikh kristallov (Electro- and Magnetooptics of Liquid Crystals). Nauka, Moscow, 1978.
[5]A. S. Zolot'ko, V. F. Kitaeva, N. Kroo, N. N. Sobolev, and L. Csillag, Kr. Soobshch. (FINA SSSR) **12**, 39 (1980).
[6]A. S. Zolot'ko, V. F. Kitaeva, N. Kroo, N. N. Sobolev, and L. Csillag, Pis'ma Zh. Eksp. Teor. Fiz. **34**, 263 (1981) [JETP Lett. **34**, 250 (1981)].
[7]G. A. Askar'yan, Zh. Eksp. Teor. Fiz. **42**, 1567 (1962) [Sov. Phys. JETP **15**, 1088 (1962)].
[8]S. A. Akhmanov, A. P. Sukhorukov, and R. V. Khokhlov, Usp. Fiz. Nauk **93**, 19 (1967) [Sov. Phys. Usp. **10**, 609 (1968)].
[9]B. Ya. Zel'dovich, N. F. Pilipetskiĭ, A. V. Sukhov, and N. V. Tabiryan, Pis'ma Zh. Eksp. Teor. Fiz. **31**, 287 (1980) [JETP Lett. **31**, 262 (1980)].
[10]Z. S. Zolot'ko, V. F. Kitaeva, N. N. Sobolev, and A. P. Sukhorukov, Zh. Eksp. Teor. Fiz. **81**, 933 (1981) [Sov. Phys. JETP **54**, 496 (1981)].
[11]A. S. Zolot'ko, V. F. Kitaeva, N. G. Preobrazhenskiĭ, and S. I. Trashkeev, Kr. Soobshch. Fiz. (FIAN SSSR) **14**, 2 (1982).
[12]A. S. Zolot'ko, V. F. Kitaeva, N. Kroo, N. N. Sobolev, A. P. Sukhorukov, and L. Csillag, in: Trudy 7-ĭ Vavilovskoĭ konferentsii po nelineĭnoĭ optike (Proceedings of Seventh Vavilov Conference on Nonlinear Optics), Novosibirsk, 1981.
[13]A. S. Zolot'ko, V. F. Kitaeva, N. Kroo, N. N. Sobolev, A. P. Sukhorukov, and L. Csillag, Zh. Eksp. Teor. Fiz. **83**, 1368 (1982) [Sov. Phys. JETP 56, 000 (1982)].
[14]B. Ya. Zel'dovich, N. V. Tabiryan, and Yu. S. Chilingaryan, Zh. Eksp. Teor. Fiz. **81**, 72 (1981) [Sov. Phys. JETP **54**, 32 (1981)].
[15]L. Csillag, J. Janossy, V. F. Kitaeva, N. Kroo, and N. N. Sobolev, Preprint KFKJ-71-1981. Budapest, 1981.