Physics – Uspekhi **61** (6) 601 – 612 (2018)

60th ANNIVERSARY OF THE BUDKER INSTITUTE OF NUCLEAR PHYSICS (BINP), SB RAS PACS numbers: 07.77.Ka, **29.20.–c**, 41.75.Fr

Industrial electron accelerators developed at the Budker Institute of Nuclear Physics, SB RAS

A A Bryazgin, N K Kuksanov, R A Salimov

DOI: https://doi.org/10.3367/UFNe.2018.03.038344

Contents

Abstract. In the early 1960s, work on developing industrial high-power electron accelerators was initiated by Academician G I Budker, the founder and director of the Institute of Nuclear Physics (currently, Budker Institute of Nuclear Physics, BINP). This review describes the arrangements and principles of operation of high-power electron accelerators of the ELV and ILU series designed and constructed at the BINP. Since 1972, 170 ELV and more than 50 ILU machines have been shipped to many countries around the world, most of them still operational. International Atomic Energy Agency surveys rate the BINP as one of the few well-trusted global suppliers of reliable industrial accelerators.

Keywords: high-power industrial electron accelerators, direct-action accelerator (DC machine), linear radio frequency accelerator (linac), accelerating tube, radiofrequency cavity, beam extraction device, electron beam treatment, bremsstrahlung, X-ray converter

1. Introduction

In 1929, the American physicist R Van de Graaff developed an electrostatic generator for 80 kV in voltage. Later, in 1931, he invented a more powerful generator 1 MV in voltage and in 1933, 7 MV in voltage. These generators were used to build high-voltage accelerators, in which the charged particles were accelerated in a vacuum tube with high voltage applied to its upper end.

In 1931, English physicists J Cockcroft and E Walton from the Rutherford laboratory developed and assembled a cascade generator with the output voltage of 700 kV. Later, these high-voltage generators were used to build accelerators providing beams of accelerated particles with the energy 10^6 eV (1 MeV) and higher.

A linear radiofrequency (RF) charged-particle accelerator was build and patented in 1928 by the Norwegian physicist Rolf Wideroe working in Germany [1].

The evolution of accelerating devices together with studies in the field of high-intensity electron beam interaction with various materials led to the development of methods for radiation processing of materials. To implement these methods in industry, the leading countries started developing high-power industrial electron accelerators [2].

In industrial linear RF accelerators (linacs), the electrons are accelerated by an RF electric field to energies of 6–12 MeV, and the supply voltage of RF oscillators is usually no higher than 30–35 kV.

2. Main application fields of industrial electron accelerators

In 1954, the Ethycon company (a Johnson & Johnson company subdivision) started using high-power electron accelerators for the sterilization of medical products [2, 3].

In the late 1950s, English scientists under the guidance of A Charlesby discovered and studied the process of solid-state crosslinking of polyethylene molecules under the action of ionizing radiation, which started investigations of cross-

A A Bryazgin, N K Kuksanov, R A Salimov Budker Institute of Nuclear Physics, Siberian Branch of the Russian Academy of Sciences, prosp. Akademika Lavrent'eva 11, 630090 Novosibirsk, Russian Federation
E-mail: A.A.Bryazgin@inp.nsk.su, kuksanov47@mail.ru, R.A.Salimov@inp.nsk.su

Received 15 January 2018, revised 16 March 2018
Uspekhi Fizicheskikh Nauk **188** (6) 672 – 685 (2018)
DOI: https://doi.org/10.3367/UFNr.2018.03.038344
Translated by A L Chekhov; edited by A M Semikhatov

linked polyethylene properties [4]. It was found that cross-linked polyethylene forms a quasicrystalline structure and ceases to behave like an amorphous body; at a large cross-linking rate, it stops melting and can retain its shape at high temperatures until it starts to char.

This discovery stimulated the development of radiation chemistry and led to the fabrication of wires and cables insulated with cross-linked polyethylene with high fire resistance. Studies of the behavior of polymer compounds [5] have shown that under irradiation, both radiation destruction and cross-linking processes occur. The rates of these two processes determine whether the cross-linking occurs and to what extent. At high irradiation doses, the radiation destruction process prevails for all polymers.

In the 1960s, electron accelerators found application in the fabrication of wires and cables. Newly developed compounds provided cross-linking under the action of ionizing radiation and the range of industrially available wires and cables with cross-linked isolation started to grow.

In the studies of cross-linked polymers, the shape memory effect was discovered. This effect was used to develop the technology for the fabrication of heat-shrinkable tubes, cuffs, films, and couplings for high-voltage cable cutting.

Significant growth in the production of wires and cables with radiation-modified isolation led to a growth in demand for high-power electron accelerators and to the need for increasing the beam energy and accelerator power. Currently, industrial accelerators are the main sources of ionizing radiation in radiation processes [2, 6]. Isotopic sources (most often based on the ^{60}Co isotope and very seldom on ^{137}Cs) are also used for industrial radiation processing [5]. The total power and efficiency of isotopic sources around the world is less than the power and efficiency of electron accelerators. According to International Atomic Energy Agency (IAEA) reviews, the number of high-power electron accelerators performing commercial radiation processing is 8–9 times larger than the number of commercial isotopic sources.

The main advantages of isotopic sources are simplicity, reliability, and low power consumption, while the main disadvantages are significantly lower efficiency, the necessity of regular (and quite expensive) recharge due to activity reduction of the radiating elements, and the risk of radiation accidents in emergency situations, which usually occur during the recharge and transport of the active elements to the source or to the recycling site. The simplicity of isotopic sources themselves is counter-balanced by the complexity of the conveyer that transports the products for processing. In order to fully use the gamma radiation of the active elements distributed inside the source almost isotropically, a conveyer with many levels and turns is needed, with the active elements being passed along a spiral on each horizontal level.

Radiation chemistry was actively being developed over recent decades. The use of ionizing sources invites more effective and ecologically clean technologies, as well as unique technologies that have no analogues in chemical production. Electron beams do not pollute the technological process: the radiation energy is absorbed in the bulk of the material and first excites the electron shells of atoms and molecules. The energy of the excited states can then be transferred to other processes such as ionization, chemical bond rupture, electromagnetic radiation quanta, or excitation of other atoms or molecules, and only after the evolution of these processes does the thermalization of the excited states occur.

The energy efficiency of radiation processing can be illustrated by the process of radiation sterilization of polymer products. The sterilization dose for medical products lies in the range 15–25 kGy (1 Gy = 1 J of ionizing radiation absorbed energy per kg mass of the irradiated product). After the absorption of a 25 kGy dose, the polymer products heat by 11–13 °C, and the processing time is several seconds. According to medical standards, thermal (autoclave) sterilization should occur at 120–160 °C, and its duration should be from several dozen seconds to two hours. Therefore, radiation chemical processes should be more profitable if correctly organized.

New prospective applications of electron accelerators include the processing of agricultural products and foodstuffs and decontamination of hospital waste for further recycling and use in the production of highly pure nanopowders.

Products made of polyethylene foam by electron-beam processing are also finding more applications. At the beginning, these materials were used for packaging, but now expanded polymers are used for noise insulation in cars, for thermal and noise insulation in buildings, as compensating gaskets in building and road work, and for the production of tourist mats, children's toys, etc.

From the early 1940, the Soviet Union was one of the world leaders in research on radiation processes. The development of nuclear power and atomic industry required data on the radiation resistance of various substances and materials (used in building, electrical insulation, lubricating, etc.), as well as data on the dependence of their parameters on the irradiation dose [7, 8]. There were many studies of the influence of large irradiation doses on various hydrocarbon compounds, which were suggested as coolants in reactor cores. It was also important to understand how electrical insulating, sealing, and lubricating materials behave under irradiation. However, the idea to use hydrocarbon compounds for reactor core cooling was rejected after investigation.

Prior to the 1960s, research on radiation processes was performed in the USSR in nuclear reactors and isotopic sources. The country was far behind the USA and European countries in the development and use of high-power electron accelerators: when the USSR had only a few accelerators, the USA had already built 200 industrial accelerators of the dynamitron variety. In the early 1960s, the USSR started to increase the pace of the development and production of industrial electron accelerators.

Already in the 1940s, the USSR started research on the influence of radiation processing on foodstuffs. It was shown that radiation processing can decrease the spoiling rate of products during storage and, in moderation, does not affect their properties. During recent decades, industrial radiation processing of foodstuffs has not been performed in Russia because the actual regulatory framework did not include this process. Currently, Russia is introducing new governmental standards (GOST) that correspond to the international standards of food irradiation. This opens new possibilities to develop novel irradiation technologies and implement them in agriculture and food industry. This situation is described in detail in [9].

According to data provided by the United Nation (UN) Food and Agriculture Organization (FAO), the amount of food lost due to spoiling reaches approximately one third of the whole amount produced and equals 1.3 billion tons [8].

Implementation of the cold pasteurization process (electron-beam irradiation) can reduce food losses, lower the morbidity of the population, and broaden the sales market due to the longer storage life of the finished products.

3. History of industrial electron accelerator development at the BINP

Work on the development of accelerators for application in agriculture was initiated at the Institute of Nuclear Physics (INP) of the Siberian Branch of the USSR Academy of Sciences (currently, the Budker Institute of Nuclear Physics, Siberian Branch of the Russian Academy of Sciences, BINP) in 1963 by its founder and director G I Budker. Here are his words.

Until now, accelerators have usually been made for research purposes, to study the structure of matter. However, the penetrating radiation has many practical applications.

The property of particles to overcome any obstacles, which are sometimes several meters thick, is used in intrascopy or inner vision.

A new prospective field of science — radiation chemistry — is based on the possibility of high-energy particles exciting and destroying the molecules of matter forming new materials.

The deadly danger of specific radiation doses for bacteria and insects can be used to disinsect and disinfect seeds, sterilize medical products, preserve foodstuffs, and decontaminate wastewater.

Radiation is a reliable assistant for doctors and biologists when they want to stimulate those processes in the living cell that are good for life and suppress the ones that cause negative effects. A well-focused beam carries a large amount of thermal energy, and it can be used to cut and melt metal or drill rock. Finally, here is the key to another interesting problem: energy transport over long distances... .

One should not confuse radiation with radioactivity. Radioactive elements that emit radiation in an uncontrolled and continuous way are very dangerous. Any quantity of them in the air or water leads to unwanted consequences when getting inside the human body. Accelerators generate radiation only in a specific region at a specific time: when not operating, they are as dangerous as a switched off X-ray device or a transformer box. Regarding the irradiated materials themselves, including foodstuffs, they do not contain any induced radioactivity and one can use them just as safely as holding an X-ray photograph of one's lungs or stomach.

G I Budker, 1969
(http://www.inp.nsk.su/~tararysh/accel/Beam_html).

In the 1960s, good parameters for high-power industrial electron accelerators were the energy of 1–1.5 MeV and the electron beam power of 10 kW. These were direct-action accelerators with two main elements: a high voltage generator and an accelerating tube.

At first, scientists at the INP developed transformer-type high-voltage direct action accelerators. These accelerators were delivered to various research organizations around the USSR and in other countries, including the pilot plant of the National Scientific and Research Institute of Cable Industry (VNIIKP), where investigations proved the high efficiency of electron-beam modification of polymer wire and cable insulation. These results caused the Ministry of the Electric Industry to request that the INP organize the production of accelerators for cable factories. There were 15 accelerators in the first order. Besides enhancement of the electron beam power, the technological task included high reliability of the devices under factory conditions, maintainability, and easy operation. After receiving this order, the INP decided not to improve the old transformer-type devices (ELTs) but instead develop a new model based on the high-voltage rectifier, ELV.

The high-voltage generator of the ELV accelerator is based on a sectioned rectifier, with each section having its own winding, rectifier, and reservoir capacitors. ELV accelerators are characterized by high efficiency, compactness, and unification of the key parts and systems. Starting from 1973, over 170 ELV accelerators were produced and launched by the BINP in various European and Asian organizations, and 120 of those accelerators are still in operation [10, 11].

In the 1970s, the INP started developing industrial 'pulsed linear accelerator' (ILU) RF accelerators. The first ILU accelerators were designed as pre-injectors in the INP accelerating facilities. ILU pre-injectors have been operating at the BINP for more than 50 years.

The first advanced development was the ILU-6 pulsed linear RF electron accelerator with a maximal beam power up to 20–40 kW and the energy range 1.5–2.5 MeV. These accelerators allowed increasing the thickness of the processed cable product insulation and heat-shrinkable tubes due to the higher energy. In the 1970s, the maximal energy of direct action accelerators did not exceed 1.5 MeV and the beam powers of linear RF accelerators operating in the 10–12 MeV range were 1–3 kW, which was not enough for industrial applications. In the late 1970s, ILU-6 accelerators started to operate in the industry [12].

4. ELV-type accelerator design

Figure 1 shows the arrangement of ELV accelerators. The sectioned high-voltage rectifier, *5*, is located inside the high pressure vessel, *1*. The extraction device, *8*, is connected to the bottom of this vessel together with high-vacuum pumps *6* and other vacuum system elements. The accelerating tube, *4*, is located inside high-voltage rectifier *5*. The electrons emitted by the injector located on the upper end of the accelerating tube have full energy at the output of the accelerating tube. After passing the vacuum system elements, the electrons enter the extraction device, where scanning electromagnets *7* uniformly distribute them over the output window foil and direct to the atmosphere. The beam current is regulated by the injector control unit, *2*, located inside high-voltage electrode *3*. The power is supplied through a frequency converter of 400 Hz to primary coil inputs *9*. The irradiated material is transported under the output window.

4.1 High-voltage rectifier

A high-voltage source is a cascade generator with a parallel inductive coupling or, equivalently, an air-core transformer with a sectioned secondary coil. The primary coil generates an alternating magnetic flux with a frequency in the range 400–1000 Hz, which induces the voltage up to 20 kV in each solenoid of the secondary coil. This voltage is rectified using a system with voltage doubling inside every section. The rectifying sections are connected in series by DC voltage. On the upper side, the rectifying section column ends with a high-voltage electrode, in which the injector control unit is located. We note that our construction contains no central magnetic circuit, which is typically used in 'conventional' transformers.

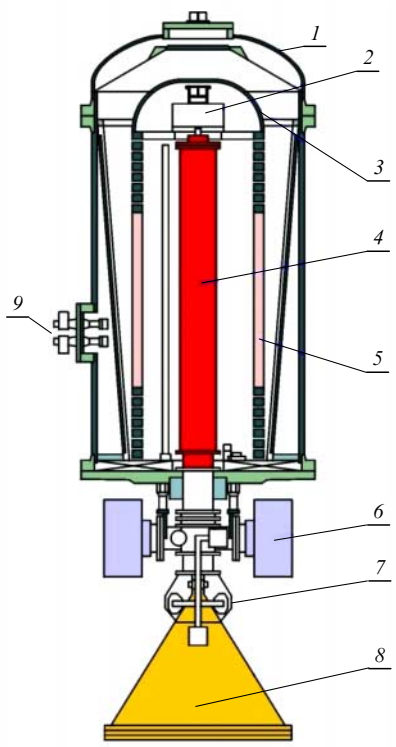

Figure 1. General view of the ELV-4 accelerator: *1* — vessel, *2* — injector control unit, *3* — high-voltage electrode, *4* — accelerating tube, *5* — column of rectifying sections, *6* — ion pumps, *7* — beam scanning electromagnets, *8* — extraction device, *9* — primary coil inputs.

This significantly simplifies the arrangement of the high-voltage source and has almost no effect on the rectifier performance due to the presence of a high-quality stabilization system.

Low-induction capacitors and inter-sectional connectors, together with damping resistances, provide a reliable protection of the high-voltage rectifier elements from voltage overload in the case of both vacuum and gas insulation breakdown. Generally speaking, a breakdown in ELV accelerators is an extremely rare event, but when designing the accelerators, we wanted to ensure that even a large number of breakdowns (several hundred or thousand) would not damage the high-voltage rectifier. Notably, this principle is always followed even today. ELV-type accelerators with various energy and power ranges differ by the number of rectifying sections and by their connection scheme. The electron energy is controlled by changing the voltage on the primary coil.

4.2 Accelerating tube

As we have mentioned, the accelerating tube is located inside the high-voltage column, which requires, first, the electron beam screening from the alternating magnetic fields of the primary coil and, second, protection of the high-voltage rectifier itself from voltage overloads that can occur during vacuum breakdowns in the accelerating tube. Screening from the longitudinal component of the magnetic field is achieved by installing short-circuited copper rings on the accelerating tube. The transverse component of the magnetic field is screened by inserting transformer steel stripes inside the rings. What makes our accelerating tube special is its large aperture, 100 mm, which improves the vacuum conditions in the tube, especially near the cathode. This lowers the requirements regarding the accuracy of the assembly and adjustment of both the accelerating tube and the electron injector. At the same time, the large aperture of the tube facilitates the occurrence of exchange processes (ions–electrons) between the high-voltage and ground electrodes. To eliminate this effect, we have calculated the optimal potential distribution near the cathode, for which secondary particles created on the surface of the electrodes near the cathode (at the high-voltage end) are focused at the output of the tube. Recently, it has been suggested that the secondary electrons be closed: a potential barrier for the secondary electrons is formed around the electrodes and exchange processes do not occur. This immediately led to a significant decrease in the time needed for the tube to reach the operating parameters. However, under high currents, there are still single breakdowns with intervals of about several dozen hours.

The maximal operating gradient in the tube is 10 kV cm^{-1}, but in the long-term continuous operation mode, it does not exceed 8 kV cm^{-1}. To transport the beam through the vacuum system and the extraction device without losses, the lower end of the accelerating tube is equipped with a magnetic lens. The lens current is changed automatically when varying the energy, and human intervention is not needed.

4.3 Electron beam extraction device from a vacuum to the atmosphere

Almost all technological processes using high-power electron accelerators assume product processing in air or other gaseous environments under atmospheric pressure. Therefore, the accelerated electron beam should be transferred from the vacuum to the atmosphere. Moreover, an optimal distribution of the beam current density in the irradiation region has to be created. This function is performed by extraction devices.

Most common is electron extraction through air-cooled thin titanium foil. The electron beam current is often limited by the heating of the output window foil due to the ionization losses in it. For most technological processes, as well as for decreasing local foil heating, it is necessary to uniformly distribute the beam current over the output window area. This is achieved by setting the specific current profile in the scanning electromagnet coils.

The output window is covered with a titanium foil 50 μm thick. Heat-resistant rubber is used as a sealant. Nowadays, the output window foil is metal-sealed with a tin–lead alloy serving as the sealant. Extraction devices are produced in three different sizes: with the window width being 75 mm and length 980, 1600, or 2000 mm.

A number of devices improving the irradiation quality and efficiency have been developed [13, 14]. For the processing of cylindrical objects (wires, cables, pipes), the optimal direction of the electron motion near the object is radial or close to radial. To realize such a beam current distribution, we have developed magnetic systems that form a radial irradiation zone, as well as devices that allow irradiating cylindrical objects from four sides.

We have developed a positioning system under the beam (Fig. 2) that translates the cable through the irradiation zone and allows synchronizing its speed and the beam current such that the dose remains constant. This system simultaneously prevents stretching of the conductive core when processing wires with a large cross section. For the irradiation of films,

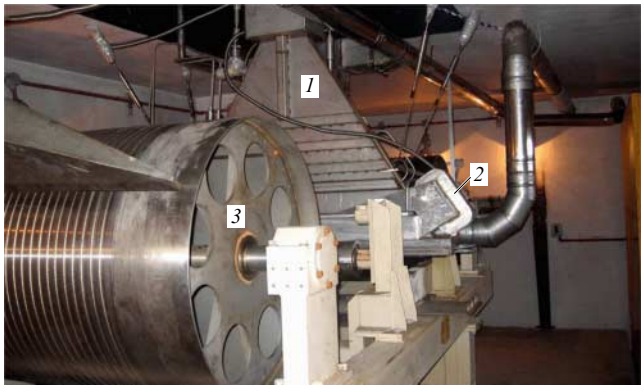

Figure 2. ELV accelerator irradiation room: *1* — extraction device, *2* — bending electromagnets of the four-side irradiating system, *3* — cable transport system under the beam.

there is a simple system that increases the uniformity of the absorbed dose over the width of the irradiated material. This provides the dose uniformity over the product width of no less than ±4%.

A high-power electron beam can also be used as a sterile source of heat input inside the relevant object. For this purpose, we have developed devices that extract a focused electron beam into the atmosphere [15, 16]. The electron beam current density at the output of these devices can reach 10 A cm^{-1} and the power density 10 MW cm^{-1}, which cannot be achieved by any other known methods. The beam is extracted through a system of holes in the apertures. The diameter of the holes is 1–2 mm. An operating vacuum inside the accelerating tube is provided by continuously operating pumps of a differential pumping system. There are two versions of accelerators with such an extraction device.

In the first version, the beam is focused by two magnetic lenses. This version is used in accelerators with the maximal power up to 100 kW. The extraction device is schematically shown in Fig. 3. It operates in the following way. The electron beam after the output of the accelerating tube is focused with the magnetic lens L1. The aperture D3 is located at the beam crossover. Then, after expansion, the beam enters the second lens L2 with a smaller focal distance. Two apertures D1 and D2 are placed in the beam crossover of this lens. The gas that leaks through the holes in the apertures is extracted by vacuum pumps through vacuum lines *2*. The maximal extracted beam current is limited by accelerating voltage modulation. Chromatic aberrations lead to an increase in the beam size, which leads to a larger size of the holes burned by the beam in the apertures. The admissible level of modulations is 2–3%.

The extraction device includes a section for the parallel transport of the beam, *4*, which prevents contamination of the tube through the beam channel by the products of beam interaction with the processed material. For the same reason, the device output has foil blowing *6*. The device is connected to the accelerating tube through automatic vacuum valve *7*. In experiments where the maximal power densities are not needed, the extraction device can be equipped with scanning electromagnets for two perpendicular directions, and the beam is deflected directly to the air. The scanning system also allows providing the dose field distribution in accordance with technological requirements.

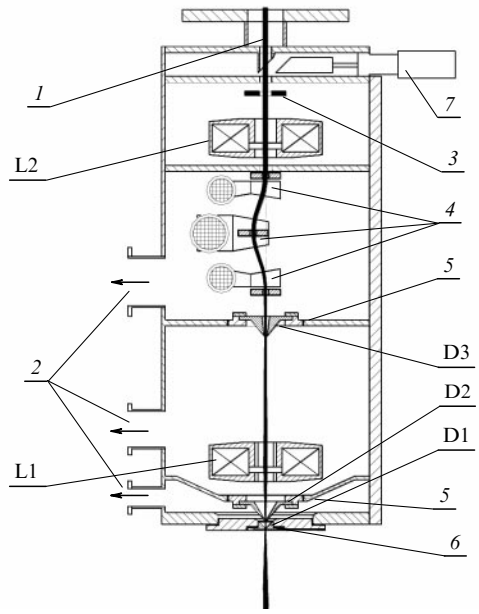

Figure 3. Schematic of a device for focused electron beam extraction into the atmosphere in an ELV-type accelerators. L1 and L2 — magnetic focusing lenses, D1, D2, D3 — apertures, *1* — beam, *2* — nipples of the vacuum pumping lines, *3* — measurement aperture, *4* — beam transfer, *5* — aperture flange insulators, *6* — foil blowing, *7* — electromagnetic vacuum valve.

In the second version of the accelerator, the beam diameter in the output apertures is decreased by the adiabatic compression of the beam with an increasing longitudinal magnetic field. This method is used in accelerators with the power of 500 kW. The main advantage of adiabatic compression is the small sensitivity of the beam size to changes in the electron energy, which is especially important for accelerators with the power of several hundred kilowatts, where the problem of modulations and instabilities of the accelerating voltage is quite relevant. The accelerating tube and the extraction device are located on one axis, and the magnetic field gradually increases from 100 G at the cathode to 10,000 G in the output aperture region. The beam size decreases inversely proportionally to the square root of the magnetic field strength. The longitudinal magnetic field is created by a system of solenoids and coils. Directly in the output aperture region, the field is increased by a steel concentrator. The maximal current extracted into the atmosphere for such an extraction device construction is 0.8 A.

4.4 Control system

The control system used in industrial accelerators largely determines their operating characteristics, among which are the convenience of control, reliability, the duration of continuous work, and maintainability [17].

The operator of a technological installation that uses our accelerator communicates with it via a personal computer. The control system of the accelerator consists of a combination of hardware and software that encompasses all units of the accelerator that require real-time control, monitoring, and diagnostics. The multifunctional control system makes it possible to do the following:

— Automate the process of accelerator control. The algorithms implemented in the control program prepare the accelerator for operation (switching on the frequency con-

verter, the foil cooling system engine, the scanning system and, if necessary, the technological equipment), monitor the state of the blocking system, and bring the energy and current of the electron beam to the operational values by switching the accelerator on.

— Reliably stabilize the main parameters of the electron beam (electron energy, beam current, and the size and position of the beam pattern on the output window foil), which ensures a high quality of radiation processing.

— During accelerator operation, ensure the continuous diagnostics of the high-voltage rectifier and self-tests of other systems of the accelerator.

— Synchronize the operation of the accelerator and other technological devices. This includes the possibility of using the accelerator as a component of a production line operating in the fully automated mode, i.e., without an operator participating in the process.

— Provide the service personnel with a broad set of commands for preliminary settings, testing, and accelerator adjustments.

— Archive the parameters of the accelerator and the technological process.

5. Parameters and applications of ELV-type accelerators

Using unified elements and units, we have built a number of accelerators with a broad range of energies, currents, and powers of the electron beam. The table provides parameters of accelerators developed at the BINP, which we are ready to deliver to customers. One of the main requirements for industrial accelerators is their reliability. A high degree of reliability of ELV-type accelerators was achieved by gaining many years of experience of accelerator operation in real conditions. Using unified construction elements and units for the entire line of ELV accelerators allows ensuring the reliability of new types of accelerators by changing only the number of these elements and their assembly scheme and retaining the operation conditions wherever possible, thus utilizing the many years of experience in the operation of previous models. We note that the provided table is somewhat conventional because we can adapt the accelerators to any requirements from the customer in the energy range 0.2–2.5 MeV, for currents up to 100 mA and the maximal power up to 100 kW.

In the period from 1973 till today, 170 ELV accelerators have been produced and delivered, 120 of which are still in operation. The BINP is a scientific research institute, and the resources for accelerator production are therefore limited, and accelerators cannot be delivered in unlimited quantities. In the late 1980s, the production of our accelerators was organized at the Vladimir Ilyich factory in Moscow, but due to economic problems, this production was stopped. Currently, we are working in partnership with South Korean and Chinese companies organizing joint production of the accelerators.

Our main consumers are China (more than 70 accelerators), South Korea (25), Russia (15), India (7), and Belarus (5). ELV accelerators are used in almost all radiation-chemical technological processes, but most often they are used for the radiation processing of various polymer products: cable insulation, heat-shrinkable tapes and tubes, the production of polyethylene foam, etc. Some of the accelerators operate at research facilities and at pilot setups for ecological applications (electron-beam wastewater and exhaust gas treatment). There are impressive examples of accelerator application to solving ecological problems. For example, electron-beam processing helped eliminate the ecological catastrophe in Voronezh, when the city water intakes were polluted with the waste from a synthetic rubber plant. A full-scale system for the electron-beam treatment of dye production drains was built in South Korea. This was the purpose for which the ELV-12 accelerator with a 400 kW extracted beam power was developed. Figure 4 shows a view of the irradiation room of this facility. However, we note that the accelerators have still not found broad application either for the treatment of thermal power station waste gases or for wastewater treatment.

The setup for rapid X-ray tomography was built based on the ELV-4 accelerator [18]. The electron beam parameters are as follows: the energy 1 MeV and the power 100 kW. The electron beam can be focused in a vacuum down to the size of 1.5 mm. The accelerating tube is separated from the high-voltage source and is connected to it through a coaxial current cable with gas insulation. A characteristic feature of this device is the possibility to tilt the accelerating tube at an angle of $\pm 30^\circ$ with respect to the vertical axis. The accelerator was shipped to the Helmholtz-Zentrum Dresden-Rossendorf (Germany).

Table. Specifications of the latest models of ELV accelerators.

Accelerator type	Energy range, MeV	Maximal beam current, mA	Maximal power, kW
ELV-mini	0.2 – 0.4	50	20
ELV-0.5	0.3 – 0.5	130	65
ELV-3	0.5 – 0.8	100	50
ELV-4-1	0.5 – 1.0	100	100
ELV-4-1.5	1.0 – 1.5	66	100
ELV-6	0.8 – 1.2	100	100
ELV-6M	0.6 – 0.9	200	180
ELV-8	1.0 – 2.5	50	100
ELV-12	0.6 – 1.0	500	400

Figure 4. Electron-beam wastewater treatment room in a dye production facility (Daegu, South Korea). The photograph shows extraction devices of ELV-12 accelerators and the reactors for water treatment.

The high-voltage rectifier of the ELV accelerator is used as the high-voltage source in the tandem accelerator with vacuum insulation [19].

Production and delivery is being organized for accelerators with a local radiation shield, which are mainly used for the processing of materials used in manufacturing tires. The energy of these accelerators reaches 0.5 MeV, and the current is 100 mA or more. Unfortunately, this technology remains undeveloped in Russia.

Together with the South Korean company EBTECH Co., Ltd., we have developed a transportable (mobile) accelerator. The accelerator and the radiation shield are located inside a trailer hauled by a car. The electron beam power is 20 kW and the maximal energy is 0.65 MeV. The whole system can be supplied both from a fixed network and from its own diesel generator.

Experiments have been performed over many years using the institute setup with the ELV-6 accelerator, which is equipped with a focused beam extraction device. These experiments concern not only electron-thermal technologies, such as welding, cutting, surfacing, hardening, and remelting under atmospheric pressure, but also the production of finely divided powders (nanopowders) of various materials [20]. Unfortunately, these technologies turned out to be unreliable due to various factors.

6. ILU RF accelerators

In the 1960s, the beam power of linear RF accelerators did not exceed 3 kW due to the low power of klystrons and magnetrons, which provided the generation of RF power in the decimeter wavelength range of the RF band.

High-power RF generators in the meter wavelength range are based on electron lamps — triodes — but rarely on tetrodes and other lamps that allow fabricating generators with a power up to several tens or hundreds of kilowatts. The experience of assembling powerful and extremely powerful pulsed RF generators in this range was gained during the development and use of meter-range radars.

This experience has been used around the world in attempts to create high-power RF accelerators, which would operate in the meter wavelength range at an operating frequency not less than 300 MHz. This problem was first solved at the INP by a research group led by V L Auslender, who at the beginning of the 1970s built the high-power pulsed RF accelerator ILU-6 with an energy up to 1.5 MeV and beam power up to 20 kW. This was a breakthrough: the RF accelerator power was increased by one order of magnitude. Work on improving the ILU accelerator was continued and the maximal energy of the ILU-6 accelerator was increased to 2.5 MeV with the maximal beam power reaching 40 kW for the energy 2 MeV.

Many original solutions have been realized using the ILU-6 accelerator. The half-wave cavity of the ILU-6 accelerator has the working frequency of 116–118 MHz and operates in the standing wave mode, in which an alternating voltage of 2.5 MV is formed between protrusions on the cavity axis. The protrusions form an accelerating gap, which accelerates electrons emitted by an injector located in the upper protrusion. The length of the accelerating gap (around 20 cm) is one order of magnitude smaller than the wavelength (2.58 m for the 116 MHz frequency). The electrons are accelerated in one pass during a small fraction of the positive half-period of the accelerating voltage, when the electric field strength at the upper electrode suffices for the electron extraction from the injector.

By the accelerating principle, the ILU-6 is similar to direct action accelerators: electrons in the beam in one pass acquire an energy equal to the potential difference between the electrodes of the accelerating gap. In conventional linear RF accelerators of the decimeter range, the electrons are accelerated by an RF electric field multiply alternating during acceleration in a standing or propagating wave.

To prevent the formation of an RF resonant discharge in the cavity (multipactor), the cavity was made of two isolated parts and a constant bias voltage was applied to the lower part.

An RF generator for the 116–118 MHz frequency was constructed based on a scheme with self-excitation on a GI-50A high-power lamp triode with the maximal pulsed power of 3 MW and the maximal pulse length of 0.7 ms. This allowed generating electron beam current pulses with a duration of 0.5–0.7 ms (most of the RF accelerators generate microsecond pulses of the beam current).

The RF generator of the ILU-6 accelerator was placed directly on the vacuum tank of the accelerator, and the generator feedback was realized through the accelerating cavity, which allowed significantly increasing the generation stability. This solution allowed creating an accelerator without the waveguiding system of power transfer from the generator inside the accelerator cavity, thus eliminating RF power losses and decreasing both the dimensions of the accelerator and the number of elements.

GI-50A generator triodes are much cheaper and have a longer life (operation time) than the klystrons and magnetrons used in most linear RF accelerators.

During the ramping-up to the operating level, turning-off, and coolant temperature variations, the cavity temperature changes, which leads to a shift in the eigenfrequency. A correctly tuned self-exciting RF generator of the ILU-6 accelerator (and other ILU accelerators) adapts to this shift and the generation continues with the same output power. This makes ILU accelerators flexible in operation and allows the operation regimes to be quickly changed. For example, high-power RF accelerators produced by the SureBeam company need 1.5–2 hours to reach the operating temperature regime; ILU accelerators are able to reach this regime almost instantaneously.

6.1 RF accelerator ILU-8

The ILU-8 accelerator is described in detail in [21]. It was developed in the early 1980s with the operating energy range 0.8–1 MeV and the beam power 20 kW. It was designed for the processing of wires, ranging from thin conducting wires to high-voltage wires of the ignition systems in combustion engines. Later, this accelerator was also used for heat-shrinkable tubes and films. These products do not need a large penetration depth, and therefore the maximal energy was chosen to be 1 MeV. The beam penetration depth for this energy is approximately 3 mm in most polymer materials. Four-side irradiation is applied to long round products (heat-shrinkable tubes, wires, cables, etc.).

Due to the low maximal energy, it was possible to create a small-size accelerator with dimensions that allow placing it inside a local biological shield, which can be installed in a standard workshop. Access to the interior of the shield is provided through a sliding wall.

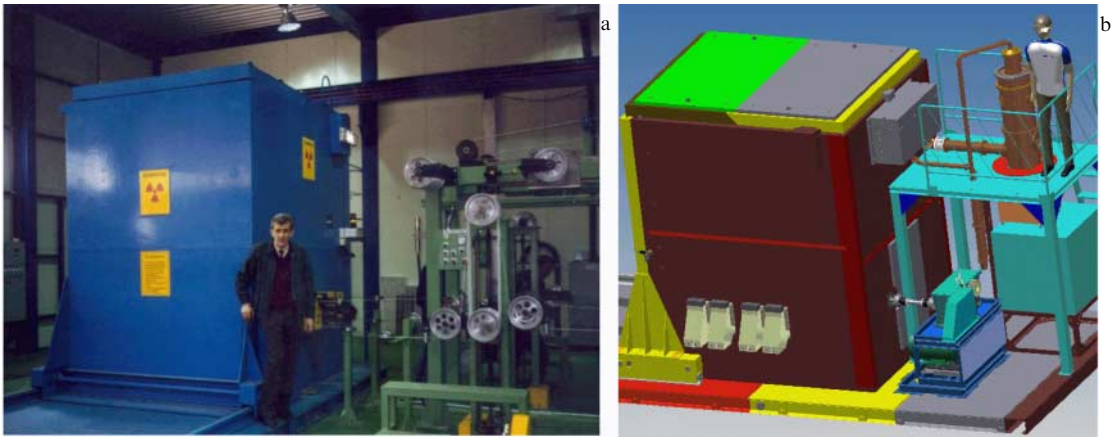

Figure 5. (a) V L Auslender, one of the creators of ILU accelerators, near the ILU-8 accelerator located inside the radiation shield. (b) Equipment for the rewinding of wires and cables, KDK company workshop (city of Yongin near Seoul, South Korea).

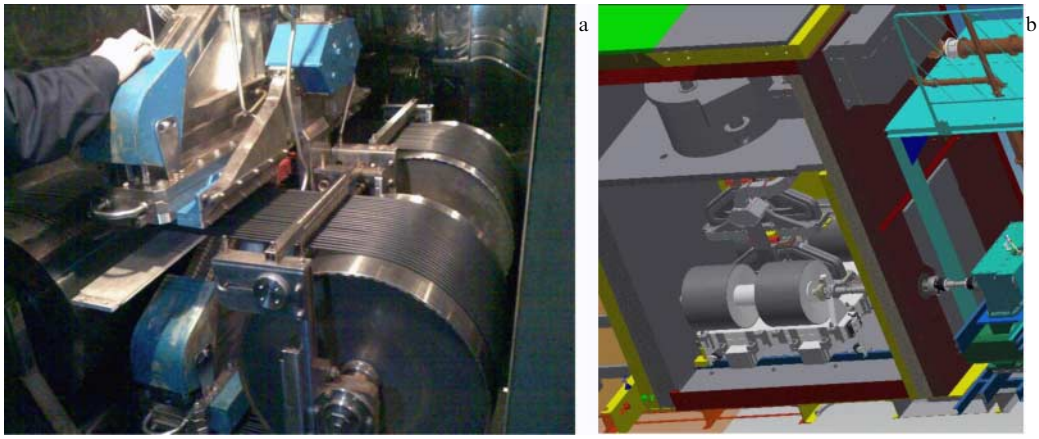

Figure 6. (a) Beam extraction device and (b) rewinding device under the beam for the four-side irradiation of tubes and wires.

To minimize the size of the setup, the operating frequency of the cavity was chosen to be in the range 176–178 MHz, and the RF generator was placed outside near the radiation shield as a separate unit.

Figure 5a shows a photograph of Auslender near the radiation shield box with the ILU-8 accelerator inside; on the right is the equipment for rewinding tubes and wires. The photograph was taken in the KDK company workshop (South Korea). Figure 5b shows the radiation shield box, next to the RF generator, and the drive unit of the rewinding device under the beam (in the lower part of the figure). Figure 6a shows a photograph of the beam extraction device and the rewinding device for four-side irradiation of tubes and wires in the KDK company workshop. Figure 6b shows the positioning of the accelerator, the beam extraction device, and the rewinding device inside the local shield box.

The standard shield is a steel box separated into two parts. The upper section contains the vacuum tank of the accelerator and its auxiliary equipment. The lower section includes the beam extraction device and the rewinding device, which provides transport of long-length products under the beam. The side wall of the shield has labyrinths for the input and output of the products being processed.

The shield weight is 76 t, and it can be installed in any workshop that is high enough (at least 4 m). ILU-8 accelerators can also be installed in a compact concrete bunker.

6.2 RF accelerator ILU-10

The ILU-10 accelerator with an energy of 5 MeV and the beam power up to 50 kW was developed in the 1990s, and its arrangement is similar to that of the ILU-6 accelerator. The difference is that its cavity is higher and has two RF generators, which allowed increasing the maximal energy and the beam power. A detailed description of the ILU-10 accelerator is given in [22].

The high quality of the cavity (shunt resistance of the ILU-10 accelerator cavity is 9 MΩ) and use of two RF generators provided the maximal accelerator energy of 5 MeV and the beam power of 50 kW. The ILU-10 is 2.4 m high, including the cavities. Figure 7 shows the arrangement of the ILU-10 accelerator, its vacuum tank with the accelerating system inside, and two RF generators installed on it, as well as the linear beam extraction device and the conveyor with the processed medical production packed in boxes.

A standard length of the output window in ILU accelerators is 980 mm. It is also possible to fabricate extraction devices with a longer output window according to customer demands. For four-side irradiation of the wires and cables, the ILU-10 accelerator is equipped with a multi-window extraction device similar to the one in Fig. 6.

The ILU-10 accelerator is used for the processing of thick-walled polymer products (heat-shrinkable tubes, wires, cables, etc.) and sterilization of medical products. A prospec-

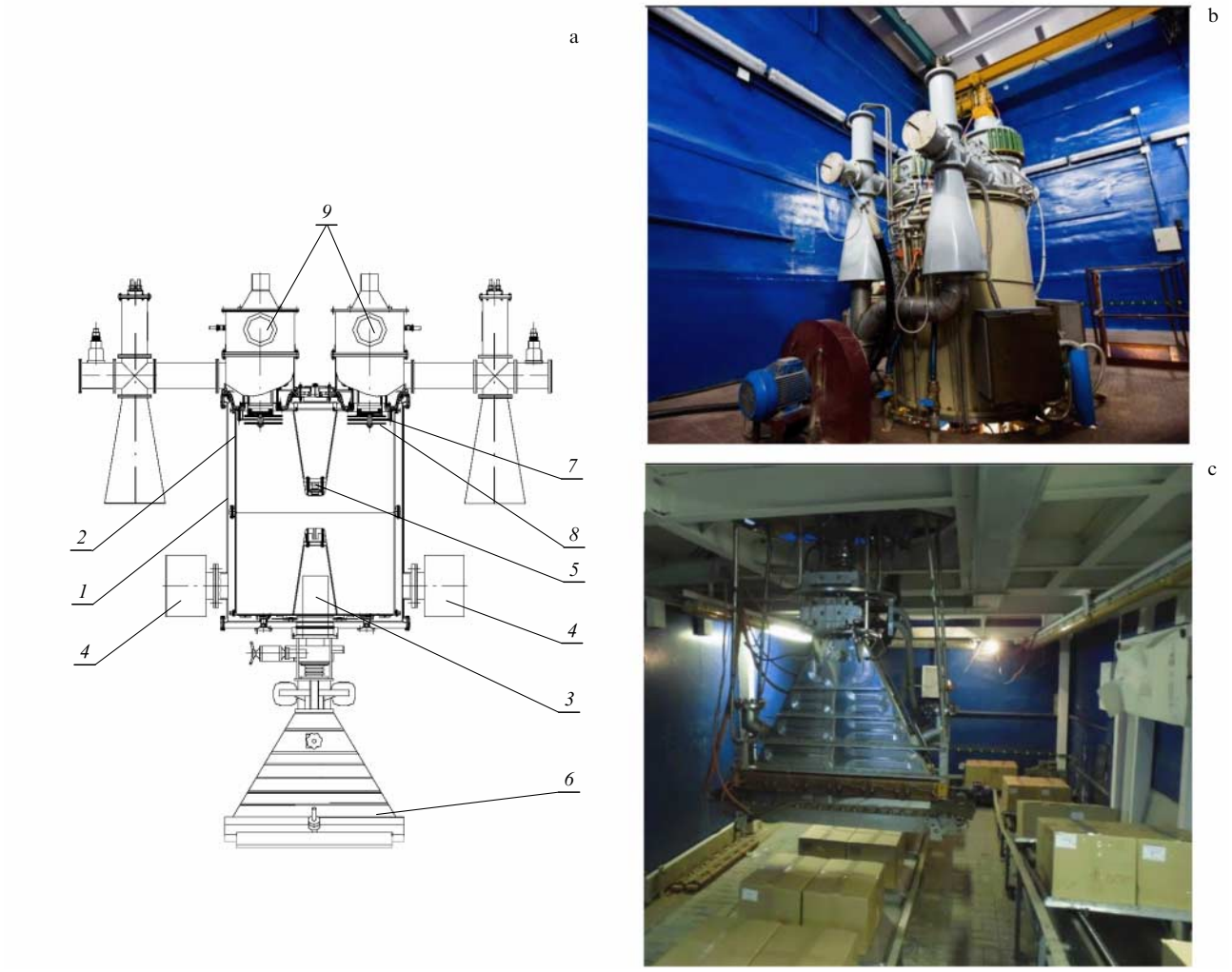

Figure 7. (a) Schematic of the ILU-10 accelerator, view of (b) the accelerating system and (c) the extraction device, *1* — vacuum tank, *2* — cavity, *3* — focusing lens, *4* — ion pumps, *5* — electron injector, *6* — extraction device — linear scan, *7* — connection loop, *8* — vacuum condenser of the connection loop, *9* — RF generator.

tive application of this accelerator is the treatment of food and agricultural products in order to improve their shelf life and prevent the spreading of infections.

The energy of 5 MeV allows cost-effective operation in the bremsstrahlung generation regime. This radiation has the same penetrability as isotope source radiation, but bremsstrahlung has a pronounced coorientation with the beam, which increases the processing efficiency.

A convertor for bremsstrahlung generation was designed for the ILU-10; it can be quickly installed directly under the output window of the accelerator. This allows processing the products using both the electron beam and bremsstrahlung. The transition from one processing type to another takes several minutes.

For the energy of 5 MeV and the beam power of 50 kW, the bremsstrahlung power is about 4 kW, which corresponds to the activity of an isotopic source of 294 kCi. The bremsstrahlung penetrability is one order of magnitude larger than that of a 5 MeV electron beam [2]. Thus, the bremsstrahlung application is justified when the electron beam penetrability is insufficient for the processing of the whole volume of the product. In this case, the power loss in the ionizing radiation is acceptable.

6.3 RF accelerators ILU-12 and ILU-14

Growth in the market for disposable medical products and the broadening of electron accelerator applications for food treatment have led to a demand for high-power accelerators with an energy up to 10 MeV and beam power of several tens or hundreds of kilowatts.

Calculations and experience have shown that the single-cavity system is energy-inefficient for energies higher than 5 MeV due to the increase in losses in the cavity, which are proportional to the square of the cavity voltage. Therefore, in order to reach higher energies, it is preferable to place several cavities in series and accelerate the electron beam in several accelerating gaps; this is analogous to a multicavity accelerating structure in linear RF accelerators and was chosen as a development plan for ILU accelerators.

Such an accelerating structure has a number of advantages over that of the Rhodotron accelerator [2] produced by the IBA company. These accelerators use a complicated magnetic system for the organization of a multipass electron acceleration with many bends. The complexity of the magnetic bending structure in the Rhodotron accelerators leads to their high cost and complicated maintenance.

Rhodotron accelerators, just like ILU, use a meter-range cavity operating in the standing wave mode and powered by an RF generator based on lamp tetrodes.

The BINP has developed and numerically modeled a modular multicavity accelerating structure in which the electron beam acceleration occurs successively in several accelerating gaps. The developed structure was used to build the ILU-12 and ILU-14 multicavity accelerators with the respective energy ranges 5–7.5 MeV and 7.5–10 MeV, the beam power up to 60 kW and 100 kW, and the accelerating structure operating frequency 176–178 MHz. A description of the ILU-14 accelerator is given in [23].

Figure 8 shows the general view and the arrangement of the accelerating structure of ILU-14 installed at a customer's facility. The structure length is 7.16 m and the total length, including the extraction device, is 8.4 m. The accelerating structures of these accelerators are powered by two-cascade self-exciting RF generators based on GI-50A triodes. RF power is fed to the structure from the top through coaxial waveguides, which can be seen in the photograph. There are several versions of generators: in the most powerful version, the second cascade consists of four triodes operating in parallel.

The accelerating structure of the ILU-14 accelerator consists of five main cavities, two end cavities, and six coupling cavities. The end cavities are two times shorter than the main cavities. This arrangement was chosen for the uniform distribution of the RF power that is fed through the coaxial waveguides to the main cavities (first, second, third, fourth, and fifth). The feedback signal for the RF generator is sent from the central (third) main cavity.

The electrons in the beam are accelerated in the gaps of the main and end cavities. After each accelerating gap, they move freely along the beam and approach the next accelerating gap in the corresponding phase such that the acceleration continues. The energy gained by the beam is determined by the sum of the accelerating voltage amplitudes in all the accelerating gaps and can be gradually tuned in a quite broad range, from 7.5 to 10 MeV.

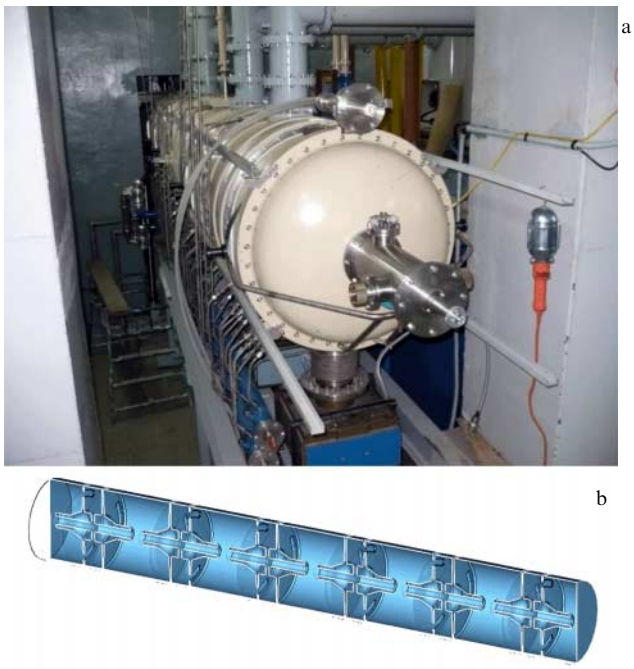

Figure 8. (a) Exterior view and (b) the arrangement of the accelerating structure of the ILU-14 multi-cavity accelerator.

The feedback signal for the RF generator is sent from the accelerating structure, and hence the temperature shift of the accelerating structure eigenfrequencies leads only to a change in the generation frequency and not to a decrease in the electron beam power.

An ILU-14 accelerator operating in the bremsstrahlung mode has been used for several years for radiation processing of polytetrafluoroethylene. A radiation method of structure modification of polytetrafluoroethylene was developed in Russia [24], and it results in an increase in the wear resistance by 10^4 times and a decrease in creep by 10^2 times.

7. Bremsstrahlung converters

Electron beam braking in a medium leads to bremsstrahlung generation. The energy spectrum of this radiation and its spatial distribution are determined by the electron beam energy and the target material. The spectral range is from the RF noise to an energy slightly less than the beam energy.

The bremsstrahlung generation intensity is proportional to the electron beam energy and the atomic number Z of the target material, because the high-energy part of the bremsstrahlung spectrum is generated by electron scattering on the electric field near the atomic nucleus, which is directly proportional to Z.

Bremsstrahlung gamma quanta have zero charge and therefore have a much larger penetrability than the electron beam that created them. The low-energy part of the bremsstrahlung spectrum has to be filtered out in order to avoid a large surface dose in the processed production.

Gamma radiation is also generated in the decay process of unstable isotopes. Physically, both types of radiation are the same: they are gamma quanta, but they are produced as a result of different physical processes.

Bremsstrahlung radiation treatment of food is legally controlled and there is an upper bound for the electron beam energy: 7.5 MeV in the USA and 5 MeV in Europe.

The penetrability of bremsstrahlung generated by an electron beam with an energy in the range 5–7.5 MeV is almost the same as the penetrability of isotopic source radiation. Therefore, electron accelerators operating in the bremsstrahlung generation mode are an economically competitive alternative to isotopic sources.

Target development for high-power bremsstrahlung generation is a serious scientific and technological task, because a balance must be found among many parameters that affect one another. The four major tasks are listed below.

The first task is to choose the material and the optimal thickness of the target. The target material should have the maximal possible value of Z for efficient bremsstrahlung generation, not be very expensive, be accessible on the market, be technologically amenable to processing, be compatible with other materials used in the target construction, etc. To remove heat, a reliable heat contact should be provided between the target and the cooling water flow, with the thermal deformations of the system during operation taken into account. The optimal material for the target is tantalum, $Z = 73$: it is solid, plastic, easy to process mechanically, and quite easily found on the market; there is a nomenclature of standard sizes in which it is produced and its price is not a limiting factor.

The second task is to choose the optimal thickness of the target. The bremsstrahlung radiation is absorbed by the target material, and hence in an excessively thick target there would be losses due to absorption. For a small thickness, the electron beam would pass it and the beam power would not be fully used for generating bremsstrahlung radiation.

The third task is to ensure heat removal from the target. The power of the electron beam used to generate bremsstrahlung radiation is in the range from 50 kW (ILU-10) to 100 kW (ILU-14), and most of the power is absorbed in the target.

The fourth task is to filter out the low-energy spectral part of bremsstrahlung radiation and the residual electrons that go through the target. This eliminates the large surface dose in the processed production.

ILU accelerator targets use a thin tantalum plate, which provides a leak-tight cover of the water-cooling channel formed on the substrate. This results in direct cooling of the tantalum plate with the water flow. The water layer behind the target and the metal wall of the channel also act as filters that absorb the low-energy part of bremsstrahlung radiation.

Thicknesses of the tantalum plate were determined for various electron beam energies by numerically modeling the bremsstrahlung generation process. The many-year experience in converter operation has proved its construction efficiency. In a 5 MeV converter, a tantalum plate 0.7 mm thick is used. This converter provides a beam power conversion efficiency of 12% at the 360° angle, and the calculated efficiency for the conversion into the bremsstrahlung power absorbed by the product (at the 60° angle) is 8.3%. For the energy 7.5 MeV, a 0.9 mm tantalum plate is used with a 16.9% beam power conversion efficiency at the 360° angle and the calculated efficiency for conversion into the bremsstrahlung power absorbed by the product (at the 60° angle) equal to 13.2%.

The higher the electron energy in the beam, the higher the bremsstrahlung generation intensity and the more pronounced is its spatial orientation along the electron beam trajectory. In the energy range from 5 MeV and higher, more than 70% of the power generated by the bremsstrahlung converter is emitted at 60° to the beam direction, which is a great advantage of the ILU accelerator over isotopic sources. This allows processing the products in one or two passes (in the case of two-side irradiation) on the conveyor under the converter. At the same time, the conveyor for the isotopic source usually has many levels and turns (around the active elements) in order to fully use the anisotropically distributed power of gamma radiation.

The accelerators have a major advantage over isotopic sources because they can process products not only with bremsstrahlung radiation but also with an electron beam with more than an order of magnitude higher efficiency.

The ILU-10 accelerator with the energy of 5 MeV and the beam power 50 kW generates bremsstrahlung radiation with the power of approximately 4 kW, which corresponds to the isotopic source radioactivity of 294 kCi, while the 50 kW electron-beam processing corresponds to 3650 kCi. For the energy of 5 MeV and the beam power 60 kW, the bremsstrahlung power at the ILU-12 accelerator is 4.8 kW, which corresponds to the isotopic source radioactivity of approximately 350 kCi.

In order to work with ILU-14 accelerators, we have developed converters designed for the electron beam power up to 100 kW. At the energy of 7.5 MeV, the bremsstrahlung power at the ILU-14 accelerator is approximately 13.2 kW, which corresponds to the isotopic source radioactivity of 968 kCi. One-hundred-kW electron-beam processing (ILU-14) corresponds to an isotopic source operation with 7300 kCi. The time needed for the installation of the target within the ILU accelerator output window is several minutes, and the reverse process takes the same time.

Besides the high processing efficiency, the accelerators have another important advantage: generally, these devices are electrical equipment and they cannot become sources of radioactive pollution in an emergency situation.

8. ILU accelerators at the BINP and studies of radiation processes

The BINP created the infrastructure for the development of radiation processes and radiation processing of products.

One of two ILU-10 accelerators with the energy of 5 MeV and a the beam power of 50 kW with a conveyor system supplying the products to the irradiation zone is jointly used by the BINP and Novosibirsk State University. The accelerator is constantly busy with the processing of medical and other products, according to the demands of the Siberian federal region. Moreover, this accelerator is regularly used for investigations of radiation technologies.

Another ILU-10 accelerator is equipped with a stage for product transport to the irradiation zone, and it is mainly used to improve the radiation process and is sometimes used in the bremsstrahlung generation mode for the processing of products that cannot be treated with a 5 MeV electron beam.

The ILU-6 accelerator with the 1.6–2.5 MeV energy range has operated at the BINP since the late 1970s. This accelerator is equipped with a translation stage for product transport to the irradiation zone. Occasionally, ILU-6 also operates in the bremsstrahlung generation mode. This accelerator is mainly used for the perfection of radiation technologies, for the study of high-power electron beam influence on various materials and chemical compounds, and occasionally for the processing of small product lots. Radiation-thermal treatment experiments are performed at the ILU-6 accelerator, because this setup has additional measurement devices; it has a system for beam power control depending on the irradiated product temperature and can support programmable heating and studying phenomena associated with phase transitions in an object.

Over the last few decades, ILU-6 was instrumental in developing many radiation technologies, from the technology for wire and cable irradiation and radiation-thermal synthesis [25–28] to the sterilization of medical products, drug synthesis, and implant preparation [29]. The BINP regularly performs studies of radiation resistance for construction materials [30].

The BINP scientists are developing synchrotron radiation sources and diagnostic devices and improving the methods for structural studies of various materials and the evolution of structural transformations. It is convenient to study the results of the influence of high-intensity electron beams on various materials by using synchrotron radiation right after their processing. The results of investigations performed at the BINP are described in [31–51].

9. Conclusions

The BINP develops and fabricates high-power industrial electron accelerators of various types: direct action ELV-type accelerators and ILU-type RF linear accelerators.

Together, these accelerators cover the whole range of energies used in industrial electron-beam processing: from 0.2 to 10 MeV.

The ILU-10 accelerator is the most compact device, with the energy 5 MeV and the beam power 50 kW. (The accelerator dimensions determine the size of the biological shield and the amount of concrete needed for its construction, which can be of great importance for production.)

The ILU-12 and ILU-14 RF accelerators operate in the high-energy range of industrial accelerators (5–10 MeV) and the maximal power of their beams is 100 kW. The world leaders in beam power for the 5–10 MeV energy range are the ILU-14 accelerator and the Rhodotron-type accelerators produced by the IBA company.

High-efficiency converters for bremsstrahlung generation are being developed for the ILU-10, ILU-12, and ILU-14 accelerators. In the bremsstrahlung generation mode, these accelerators can replace isotopic sources.

An IAEA review [2] names the BINP as one of the few organizations around the world that have gained trust in the industry and are known as a supplier of reliable industrial accelerators.

For industrial applications, conventional linear RF accelerators with the energy range 6–10 MeV are also used. The power of most RF accelerators does not exceed 10–20 kW and the maximal beam power of 60 kW was demonstrated at the experimental-industrial linac produced by SureBeam Corp.

The ramp-up time to the operating regime is about 1.5 to 2 hours for SureBeam accelerators. This time is needed for temperature stabilization of the accelerating structure, because the temperature variations lead to changes in the adjustments of the accelerating structure and coupling waveguides. Due to the use of an RF generator with self-excitation, ILU accelerators ramp up almost instantaneously.

ILU-10 type accelerators developed and produced at the BINP are currently the most promising Russian devices for the treatment of food and agricultural products. This accelerator generates an electron beam with an energy of 5 MeV and power of 50 kW, which also allows it to operate in the bremsstrahlung generation mode. Further development and growth in demand for electron-beam processing would lead to greater interest in the ILU-12 and ILU-14 accelerators that generate a more powerful electron beam.

Modern electron accelerators are preferable to isotopic sources, because they are very reliable, are cost-effective, and do not pose an environmental threat as radioactive isotopes do.

For decades, 170 ELV-type industrial accelerators and more than 50 ILU-type accelerators have been operating in the industries of Russia, China, Kazakhstan, India, Poland, Germany, and other countries.

References

1. Wideróe R "Über ein neues Prinzip zur Herstellung hoher Spannungen" *Archiv Elektronik* **21** 387 (1928)
2. Industrial Radiation Processing With Electron Beams and X-rays (Vienna: IAEA techdoc, 1 May 2011 — Revision 6), http://www.cirms.org/pdf/Industrial%20Radiation%20Processing%20-20May%202011%20-%20Revision%206.pdf
3. Chmielewski A G, Berejka A J "Radiation sterilization centres world-wide", Trends in Radiation Sterilization of Health Care Products (Vienna: IAEA 2008); http://www-pub.iaea.org/MTCD/publications/PDF/Pub1313_web.pdf
4. Charlesby A *Atomic Radiation and Polymers* (London: Pergamon Press, 1960)
5. Pikaev A K *Sovremennaya Radiatsionnaya Khimiya. Tverdoe Telo i Polimery. Prikladnye Aspekty* (Modern Radiation Chemistry. Solids and Polymers) (Moscow: Nauka, 1987)
6. Trends in Radiation Sterilization of Health Care Products (Vienna: IAEA 2008); http://www-pub.iaea.org/MTCD/publications/PDF/Pub1313_web.pdf
7. Zaslavskii Yu S *Radiatsionnaya Stoikost' Smazochnykh Materialov* (Radiation Resistance of Lubricants) (Moscow: Gosatomizdat, 1961)
8. Topchiev A V, Polak L S *Radioliz Uglevodorodov. Nekotorye Fiziko-khimicheskie Problemy* (Radiolysis of Hydrocarbons. Some Physico-chemical Problems) (Moscow: Izd. AN SSSR, 1962)
9. Aleksakhin R M "Perspektivy ispol'zovaniya radiatsionnykh tekhnologii v agropromyshlennom komplekse Rossiiskoi Federatsii" ("Perspectives of radiation technology usage in Russian Federation agroindustrial complex") *Vestn. Ross. Akad. Estestven. Nauk* **1** 78 (2014)
10. Salimov R A *Phys. Usp.* **43** 189 (2000); *Usp. Fiz. Nauk* **170** 197 (2000)
11. Kuksanov N K et al. *Rad. Phys. Chem.* **46** 481 (1995)
12. Auslender V L, Salimov R A *Atom. Energ.* **44** 403 (1978)
13. Kuksanov N K et al. *Pis'ma Zh. Eksp. Chast. At. Yadra* **11** 950 (2014)
14. Kuksanov N K et al. *Kabeli Provoda* (4) 16 (2004)
15. Zimek Z, Salimov R A *Rad. Phys. Chem.* **40** 317 (1992)
16. Kuksanov N K et al. *Rad. Phys. Chem.* **57** 3 – 6 653 (1992)
17. Kuksanov N K et al. *Vopr. Atom. Nauki Tekh.* (3) 211 (2012)
18. Kuksanov N K et al. *Rev. Sci. Instrum.* **83** 9 093707 (2012)
19. Domarov E V et al. *Prib. Tekh. Eksp.* (1) 77 (2017)
20. Kuksanov N K et al. *Bull. Mater. Sci.* **34** 4677 (2011)
21. Auslender V L et al. *Prib. Tekh. Eksp.* (3) 98 (2009)
22. Auslender V L et al. *Sbornik Dokladov Odinnadtsatogo Mezhdunarodnogo Soveshchaniya po Primeneniyu Uskoritelei Zaryazhennykh Chastits v Promyshlennosti i Meditsine* (Proc. of the Eleventh Intern. Council on the Application of Charged Particle Accelerators in the Industry and Medicine) (St. Petersburg: St. Petersburg Univ., 2005)
23. Bryazgin A A et al. *Instrum. Exp. Tech.* **54** 3 295 (2011); *Prib. Tekh. Eksp.* (3) 5 (2011)
24. Khatipov S A, Artamonov N A *Zh. Ros. Khim. Obshch. im. D.I. Mendeleeva* **52** (3) 89 (2008)
25. Sadykov V et al. *J. Power Sources* **196** 7104 (2011)
26. Sadykov V et al. *Elektrokhimiya* **47** 4517 (2011)
27. Surzhikov A P et al. *Izv. Vyssh. Ucheb. Zaved. Fiz.* (1–2) 56151 (2013)
28. Ancharova U V et al. *Vestn. Novosibirskogo Gos. Univ. Fiz.* (4) 41 (2013)
29. Stepanova A O et al. *Sib. Nauch. Med. Zh.* **36** (1) 36 (2016)
30. Petrov V V, Pupkov Yu A *Tech. Phys.* **61** 1023 (2016); *Zh. Tekh. Fiz.* **86** (7) 65 (2016)
31. Shkurupiy V A et al. *RadPhysChem* **63** 3 (2002)
32. Auslender V L et al. *Vopr. Atom. Nauki Tekh. Tekh. Fizika Avtomatizatsiya* **58** 43 (2004)
33. Auslender V L, Korobeinikov M V, Serbin V I *Vopr. Atom. Nauki Tekh. Tekh. Fizika Avtomatizatsiya* **62** 12 (2007)
34. Panin S V *Trenie Smazka Mashinakh Mekhanizmakh* (12) 26 (2011)
35. Merzhievskii L A et al. *Dinamika Sploshnoi Sredy. Mekh. Strukt.-neodnorod. Sred* **127** 58 (2012)
36. Mikhailenko M A et al. *Khim. Interesakh Ustoichivogo Razvitiya* **22** 49 (2014)
37. Mikhailenko M A et al. *Chem. Sustainable Development* **22** 47 (2014)
38. Ancharova U V et al. *IOP Conf. Ser.* **81** 012122 (2015)
39. Mikhailenko M A et al. *IOP Conf. Ser.* **81** 012123 (2015)
40. Korobeinikov M V et al. *IOP Conf. Ser.* **81** 012124 (2015)
41. Kostishin V G et al. *Tavricheskii Nauchnyi Obozrevatel'* **4** (2015) (December)
42. Kostishyn V G et al. *J. Nano- Electron. Phys.* **7** 4 04044 (2015)
43. Ancharova U V et al. *IOP Conf. Ser.* **110** 012110 (2016)
44. Lysenko E N et al. *Nucl. Instrum. Meth. Phys. Res. B* **392** 1 (2017)
45. Tolochko B P, Zolotarev K V *J. Struct. Chem.* **57** 1288 (2016)
46. Trenikhin M V et al. *Fullerenes Nanotubes Carbon Nanostructures* **23** 9801 (2015)
47. Ivashchenko O V et al. *Nanotechnol. Russia* **10** 696 (2015)
48. Ancharova U V et al. *IOP Conf. Ser.* **110** 012110 (2016)
49. Ancharova U V et al. *Phys. Procedia* **84** 360 (2016)
50. Mikhailenko M A et al. *IOP Conf. Ser.* **168** 012109 (2017)
51. Ancharova U V et al. *IOP Conf. Ser.* **168** 012110 (2017)