Physics – Uspekhi **56** (11) 1126 – 1131 (2013)

METHODOLOGICAL NOTES PACS numbers: 03.65.Ud, 42.65.Lm

Bernstein's paradox of entangled quantum states

A V Belinsky, A S Chirkin

DOI: 10.3367/UFNe.0183.201311e.1231

Abstract. Bernstein's classical paradox of a regular colored-faced tetrahedron, while designed to illustrate the subtleties of probability theory, is strongly flawed in being asymmetric. Faces of tetrahedron are nonequivalent: three of them are single-colored, and one is many-colored. Therefore, even prior to formal calculations, a strong suspicion as to the independence of the color resulting statistics arises. Not so with entangled quantum states. In the schematic solutions proposed, while photon detection channels are completely symmetric and equivalent, the events that occur in them turn out to be statistically dependent, making the Bernstein paradox even more impressive due to the unusual behavior of quantum particles not obeying classical laws. As an illustrative example of the probability paradox, Greenberger–Horne–Zeilinger multiqubit states are considered.

> *An important role in the history of the advancement of science has been played by conflicting views — paradoxes. Two kinds of views come into contradiction with each other, and this results in the further progress of science, which gives rise to the development of this conflict.*
>
> L I Mandelstam

The words placed as epigraph to this paper were pronounced by L I Mandelstam when delivering a lecture on selected problems of optics more than 80 years ago [1]. L I Mandelstam emphasized the important role of paradoxes in the course of education: "There are two stages of comprehension," he said, "The first one is when you have studied some problem as if you know everything you need, but still cannot answer independently a new question relating to the problem under study. And the second degree of comprehension is when a general picture, a clear understanding of all relations emerges. We call those questions which cannot be answered without achieving this second degree of understanding the paradoxes. Analyzing such paradoxes is highly beneficial for achieving complete comprehension" (Ref. [1, p. 8]).

Progress in quantum optics in the last several decades abounds in the formulation and solution of a variety of paradoxes, which favor a deeper understanding of the features of entangled quantum states. Cases in point are the Einstein–Podolsky–Rosen (EPR) paradox [2][1], Bell's theorem, inequalities, and a series of paradoxes [10], and the Greenberger–Horne–Zeilinger (GHZ) paradox [11, 12] (see also review [13]). The last named paradox is remarkable in that, unlike Bell's inequalities, it boils down to the equality of the type $+1 = -1$, i.e. the classical description of experiment results in $+1$, while the quantum one yields minus unity. This enhancement of the effect is achieved through increasing the number of observers, who record triples, quadruples, etc. of correlated photons. At the same time, not only is $+1 = -1$ realized when the number of observers is greater than two, but also statistical inequalities like Bell's ones become stronger, i.e. the contrast between quantum and classical results becomes greater. In this regard, of interest is the recurrent generalization of Clauser–Horne–Shimony–Holt inequalities [14] to the case of an arbitrary number of observers — the Mermin–Ardehali–Belinsky–Klyshko paradox [15–17] (see also Refs [18, 19]) — and several inequalities which take into account actual detection loss [20, 21]. Also amazing is the nonlinear beam splitter paradox [22]. The number of references to paradoxes in optics may be extended; the authors of Refs [23–28], for instance, discuss Zeno's paradox, which casts doubt on the principle of causality itself, i.e. quantum nonlocality manifests itself not only in space, but also in time (see also book [29] and a recent paper [30]).

Why has the interest in this subject area not declined to date? An important role in the quest for an adequate interpretation of the quantum theory is played by the revelation of inherently nonclassical effects whose descriptions by quantum and classical theories are radically different. Strictly speaking, it was precisely an effect of this kind — an ultraviolet catastrophe — that marked the beginning of the new area in physics.

There is a long-established prejudice that the passage from quantum physics to classical physics is accomplished by letting Planck's constant h tend to zero. If this were so, the classical description would be merely a special case of the quantum one. But, in reality, there are radical differences between them in a large number of cases, whereas the decrease in h would entail only quantitative changes. A qualitative step ensues only at $h = 0$. This is attested to not only by a variety of macroscopic quantum effects (like current quantization in a superconducting closed loop or the squeezing of quantum fluctuations of the quadrature component of a light field), but also by the above-listed family of quantum paradoxes, which are inconsistent with our usual classical intuitions. We call the reader's attention to one suchlike paradox — the quantum analogue to Bernstein's paradox [31]. This paradox is, perhaps, not as impressive as quantum nonlocality or

A V Belinsky, A S Chirkin International Laser Center, Faculty of Physics, Moscow State University,
Leninskie gory, 119991 Moscow, Russian Federation
E-mail: belinsky@inbox.ru,
aschirkin@rambler.ru

Received 22 April 2013, revised 13 June 2013
Uspekhi Fizicheskikh Nauk **183** (11) 1231 – 1236 (2013)
DOI: 10.3367/UFNr.0183.201311e.1231
Translated by E N Ragozin; edited by A Radzig

[1] See the Russian translation of paper [2] published in *Usp. Fiz. Nauk* [3] with V A Fock's comments, and the translation of Niels Bohr's comment [4] on paper [2], as well as reviews [5–9].

causality violation, but is, in our view, also quite interesting and highly instructive.

The classical Bernstein paradox (see, for instance, Refs [32, 33]) serves as a perfect illustration of the nontriviality of criteria for the statistical independence of random processes. When there are more than two such processes, one would think that a conclusion about their independence follows obviously from all possible pairwise statistical independences, by analogy, for instance, with the following fact: from the pairwise equality of all numbers entering into some closed set there necessarily follows the equality among all numbers of this set. This 'common sense', however, is far from the truly sufficient criterion for statistical independence, and intuition fails in this case.

Concerning three events, A, B, and C, their pairwise independence alone,

$$P(\mathrm{AB}) = P(\mathrm{A})\,P(\mathrm{B})\,, \quad P(\mathrm{AC}) = P(\mathrm{A})\,P(\mathrm{C})\,, \qquad P(\mathrm{BC}) = P(\mathrm{B})\,P(\mathrm{C})\,, \tag{1}$$

whence it follows that

$$P(\mathrm{A})\,P(\mathrm{B})\,P(\mathrm{C}) = \left[P(\mathrm{AB})\,P(\mathrm{BC})\,P(\mathrm{CA})\right]^{1/2}\,,$$

may prove to be insufficient for the independence of all three events. To ascertain this proposition, we take, following Ref. [33], a regular tetrahedron, whose three faces are single-colored — red (R), green (G), and blue (B) — and whose fourth face is many-colored, or, more precisely, tri-colored, i.e. contains all three colors (Fig. 1). We throw the tetrahedron on a table. Let event R consist of the tetrahedron having fallen on the face painted with a red color. The probability of event R, like the probabilities of the other two possible events, G and B, is defined in a similar way:

$$P(\mathrm{R}) = P(\mathrm{G}) = P(\mathrm{B}) = \frac{2}{4} = \frac{1}{2}\,, \tag{2}$$

because there are only four outcomes (the number of tetrahedron faces) and two faces correspond to every event — a single-colored face and the many-colored one.

It is easy to calculate the intersection probabilities of any of the two events under consideration, because only one many-colored face corresponds to the simultaneous occurrence of two colors:

$$P(\mathrm{RG}) = P(\mathrm{RB}) = P(\mathrm{GB}) = \frac{1}{4}\,. \tag{3}$$

Therefore, the pairwise independence conditions (1) are fulfilled, but the intersection of all three events, RGB, is also favored by the fall on the many-colored face, namely,

$$P(\mathrm{RGB}) = \frac{1}{4} \neq P(\mathrm{R})\,P(\mathrm{G})\,P(\mathrm{B}) = \frac{1}{8}\,. \tag{4}$$

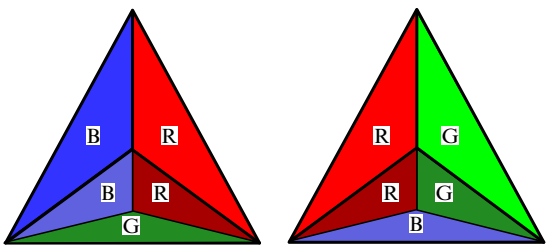

Figure 1. Tri-colored regular tetrahedron, which serves to demonstrate the classical Bernstein paradox.

Consequently, in the aggregate, the events under consideration have turned out, against all expectations, to be statistically dependent, and to state their independence requires supplementing conditions (1) with fulfillment of the right-side equality in expression (4). In the general case of N events, it is required to verify $2^N - N - 1$ conditions.

Although this paradox is amazingly beautiful, from the very beginning one feels that there must be a catch to it. For the tetrahedron faces are not equivalent: three are single-colored, and one is many-colored. That is why a suspicion creeps in even prior to performing formal calculations. But in the quantum world it is possible to avoid this 'stretch'. There, more freedom is present in the behavior of elementary particles, and complete design symmetry is attainable.

As noted above, a number of paradoxes related to entangled states with discrete or continuous quantum variables have been theoretically predicted in optics and experimentally tested over the last few decades. We recommend the reader to turn to review [34] to familiarize himself with the methods of generating quantum states with continuous variables, and to recent review [13] to familiarize himself with the methods of generating quantum states with discrete variables. Below, we discuss another possibility for observing a quantum paradox — an analogue to the classical Bernstein paradox — by the example of entangled states with discrete variables, for which we consider three- and four-photon states.

We address ourselves to three-cubit and four-cubit GHZ states:

$$|\mathrm{GHZ}_3\rangle = \frac{1}{\sqrt{2}}\left(|\mathrm{HHH}\rangle + |\mathrm{VVV}\rangle\right), \tag{5}$$

$$|\mathrm{GHZ}_4\rangle = \frac{1}{\sqrt{2}}\left(|\mathrm{HHHH}\rangle + |\mathrm{VVVV}\rangle\right), \tag{6}$$

where use is made of the following notation:

$$|\mathrm{HHH}\rangle = |\mathrm{H}\rangle|\mathrm{H}\rangle|\mathrm{H}\rangle = |1\rangle_{\mathrm{H}}^{\mathrm{a}}|0\rangle_{\mathrm{V}}^{\mathrm{a}}|1\rangle_{\mathrm{H}}^{\mathrm{b}}|0\rangle_{\mathrm{V}}^{\mathrm{b}}|1\rangle_{\mathrm{H}}^{\mathrm{c}}|0\rangle_{\mathrm{V}}^{\mathrm{c}}\,, \qquad |\mathrm{VVV}\rangle = |\mathrm{V}\rangle|\mathrm{V}\rangle|\mathrm{V}\rangle = |0\rangle_{\mathrm{H}}^{\mathrm{a}}|1\rangle_{\mathrm{V}}^{\mathrm{a}}|0\rangle_{\mathrm{H}}^{\mathrm{b}}|1\rangle_{\mathrm{V}}^{\mathrm{b}}|0\rangle_{\mathrm{H}}^{\mathrm{c}}|1\rangle_{\mathrm{V}}^{\mathrm{c}}\,. \tag{7}$$

A similar representation may be written out for the four-cubit states. Next, let $|\mathrm{H}\rangle = |1\rangle_{\mathrm{H}}^{\mathrm{a}} = \hat{a}_{\mathrm{H}}^{\mathrm{a}+}|0\rangle_{\mathrm{H}}^{\mathrm{a}}$ be the single-photon state of mode a with horizontal polarization ($|0\rangle_{\mathrm{H}}^{\mathrm{a}}$ is the vacuum state). Similarly, $|\mathrm{V}\rangle = |1\rangle_{\mathrm{V}}^{\mathrm{a}} = \hat{a}_{\mathrm{V}}^{\mathrm{a}+}|0\rangle_{\mathrm{V}}^{\mathrm{a}}$ is the single-photon state of mode a with vertical polarization. The production $\hat{a}^+$ and annihilation $\hat{a}$ operators for a mode of the same polarization satisfy ordinary commutation relations:

$$\left[\hat{a}_F^g, \hat{a}_F^{g+}\right] = 1\,, \quad F = \mathrm{H}, \mathrm{V}\,; \quad g = \mathrm{a}, \mathrm{b}, \mathrm{c}\,. \tag{8}$$

Operators relating to different modes and polarizations commute with each other.

The vector of the $|\mathrm{GHZ}_3\rangle$ quantum state is not factorable: it cannot be represented in the form of the product

$$|\mathrm{GHZ}_3\rangle \neq |\psi^{\mathrm{a}}\rangle|\psi^{\mathrm{b}}\rangle|\psi^{\mathrm{c}}\rangle\,, \quad |\psi^{j}\rangle = \frac{1}{\sqrt{2}}\left(|\mathrm{H}\rangle + |\mathrm{V}\rangle\right).$$

It is precisely such states that are termed *entangled* [13, 35]. The state of polarization in them is 'entangled' with a concrete triplet of photons: all three photons are polarized either in one

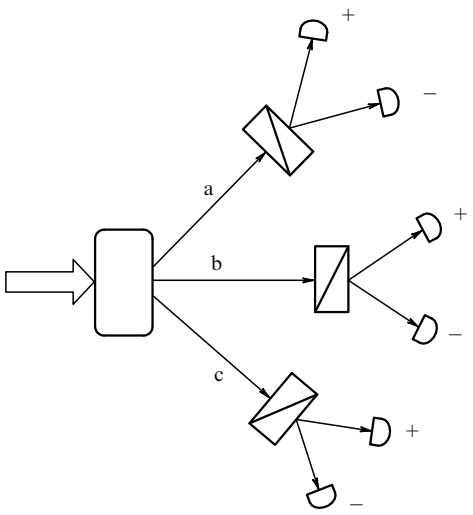

Figure 2. Schematic of the three-photon quantum realization of the Bernstein paradox: correlated photon triplets with arbitrary orientations of polarization planes but strictly correlated relative to each other are generated in the nonlinear medium under a laser pump incident from the left. The photons next arrive at polarization Wollaston prisms which separate the photons with mutually orthogonal polarizations and direct them to positive and negative detection channels. In this case, all pairwise probabilities of the simultaneous detection of two plusses are found to be equal to the product of single probabilities, which seemingly testifies to the independence of the events, but the probability for the detection of three plusses is not.

plane or in the orthogonal one. Meanwhile, the polarization of every single photon in one channel will be absolutely random. Only the triple correlation is not random.

The simultaneous generation of three photons (a pump photon of frequency $\omega_{\rm p}$ decays into three photons a, b, and c with frequencies $\omega_{\rm p} = \omega_{\rm a} + \omega_{\rm b} + \omega_{\rm c}$) is possible in nonlinear crystals or optical fibers due to cubic nonlinearity $\chi^{(3)}$ under the action of coherent laser light [36, 37]. In this case, it is possible to achieve perfect correlation of the polarization states of all three photons: they all are polarized either horizontally (H) or vertically (V).

Those readers who do not want to delve deeply into the subtleties of the mathematical substantiation of correlation calculations may go over directly to Fig. 2.

To describe the correlation properties of three-cubit GHZ states, we take advantage of the normally ordered characteristic function [38, 39]

$$C_3(\eta, \xi) = \mathrm{Tr}\left(\rho \prod_{j=\mathrm{a,b,c}} \hat{Q}_{\rm H}(\eta_j)\, \hat{Q}_{\rm V}(\xi_j)\right), \tag{9}$$

where $\rho = |\mathrm{GHZ}_3\rangle\langle\mathrm{GHZ}_3|$ is the state density matrix. Operators $\hat{Q}_{\rm H}$ have the form

$$\hat{Q}_{\rm H}(\eta_j) = \exp\left(\eta_j \hat{a}_{\rm H}^{j+}\right) \exp\left(-\eta_j^* \hat{a}_{\rm H}^{j}\right), \tag{10}$$

and η_j is a complex coefficient. The averaging in expression (9) is performed over the states of all modes. The derivatives of characteristic function (9) with respect to η_j, η_j^* result in normally ordered moments of the production and annihilation operators.

Since we are dealing with single-photon states in mode (5), in the calculation of the characteristic function (9) it is expedient to restrict ourselves to the expansion of exponential functions (see below) as follows:

$$\exp\left(\eta_j \hat{a}_{\rm H}^{j+}\right) = 1 + \eta_j \hat{a}_{\rm H}^{j+} + \ldots,$$

$$\exp\left(-\eta_j^* \hat{a}_{\rm H}^{j}\right) = 1 - \eta_j^* \hat{a}_{\rm H}^{j} + \ldots,$$

and, on their substitution into expression (9), retain only the terms containing the first powers of coefficients η, η^*, ξ, ξ^*. As a result, prior to calculation of the trace we have

$$C_3(\eta, \xi) = \mathrm{Tr}\left(\rho(\hat{H}_{\rm a}\hat{H}_{\rm b}\hat{H}_{\rm c} + \hat{V}_{\rm a}\hat{V}_{\rm b}\hat{V}_{\rm c}) - \left(\eta_{\rm a}\hat{a}_{\rm H}^{\rm a}\eta_{\rm b}\hat{a}_{\rm H}^{\rm b}\eta_{\rm c}\hat{a}_{\rm H}^{\rm c}\xi_{\rm a}^*\hat{a}_{\rm V}^{\rm a}\xi_{\rm b}^*\hat{a}_{\rm V}^{\rm b}\xi_{\rm c}^*\hat{a}_{\rm V}^{\rm c} + \text{h.c.}\right)\right), \tag{11}$$

where h.c. signifies Hermitian conjugation:

$$\hat{H}_j = 1 - |\eta_j|^2\, \hat{n}_{\rm H}^{j}, \quad \hat{V}_j = 1 - |\xi_j|^2\, \hat{n}_{\rm V}^{j}, \quad j = \mathrm{a, b, c},$$

and $\hat{n}^j = \hat{a}^{j+}\hat{a}^j$ is the photon number operator.

According to expressions (10), (11), the correlation of photon triplets (or mixed photon moments) with horizontal polarization is defined as

$$G_{\rm H}^{(3)} = \langle \hat{n}_{\rm H}^{\rm a}\hat{n}_{\rm H}^{\rm b}\hat{n}_{\rm H}^{\rm c}\rangle = \mathrm{Tr}\left(\rho\, \hat{n}_{\rm H}^{\rm a}\hat{n}_{\rm H}^{\rm b}\hat{n}_{\rm H}^{\rm c}\right) = (-1)^3 \left.\frac{\partial^6 C(\eta, \xi)}{\partial\eta_{\rm a}\,\partial\eta_{\rm a}^*\,\partial\eta_{\rm b}\,\partial\eta_{\rm b}^*\,\partial\eta_{\rm c}\,\partial\eta_{\rm c}^*}\right|_{\eta=\eta^*=0}. \tag{12}$$

Triple correlations with vertical polarization are defined in a similar way: $G_{\rm V}^{(3)} = \langle \hat{n}_{\rm V}^{\rm a}\hat{n}_{\rm V}^{\rm b}\hat{n}_{\rm V}^{\rm c}\rangle$. It is easily seen that photon number correlations for orthogonal polarizations are absent. The moments of the number of photons in the form (12) are pseudoclassical and may be defined in terms of joint cumulants using classical formulas [31].

Purely quantum correlations are contained in the interference terms of expression (11). The quantum Bernstein paradox is related to precisely these two terms. In accordance with expression (11), the superposition of sixth-order field correlations is given by

$$\Gamma_{\rm HV}^{(6)} = \langle \hat{a}_{\rm H}^{\rm a+}\hat{a}_{\rm H}^{\rm b+}\hat{a}_{\rm H}^{\rm c+}\hat{a}_{\rm V}^{\rm a}\hat{a}_{\rm V}^{\rm b}\hat{a}_{\rm V}^{\rm c}\rangle + \text{c.c.} = (-1)^3 \left.\frac{\partial^6 C(\eta, \xi)}{\partial\eta_{\rm a}\,\partial\eta_{\rm b}\,\partial\eta_{\rm c}\,\partial\xi_{\rm a}^*\,\partial\xi_{\rm b}^*\,\partial\xi_{\rm c}^*}\right|_{\eta=\xi^*=0} + \text{c.c.}, \tag{13}$$

where c.c. signifies complex conjugation.

We emphasize that all operators in expression (13) apply to different modes, which differ in polarization or frequency. The photodetector response is related to the photon number operator. In the measurement of correlations of the form (13), this expression should be transformed so as to contain photon number operators.

A possible experimental arrangement is depicted in Fig. 2. Each photon of a photon triplet arrives at a polarization Wollaston prism (see Fig. 2), which divides orthogonal polarizations into two directions: towards photodetectors '+' or '−' (the reason for this notation will be clear from the subsequent analysis). In this case, the prisms are symmetrically oriented relative to the H and V polarization directions, i.e. at an angle of $\pi/4$ to them. This is all done to achieve perfect equivalence of the channels. Such a prism comprises, in fact, a 50% beam splitter. In the Heisenberg representation, its action in channel a is described by the following

relations

$$\hat{a}_+^{\mathrm{a}} = \frac{1}{\sqrt{2}}\left(\hat{a}_{\mathrm{V}}^{\mathrm{a}} + \exp\left(\mathrm{i}\varphi_a\right)\hat{a}_{\mathrm{H}}^{\mathrm{a}}\right),$$
$$\hat{a}_-^{\mathrm{a}} = \frac{1}{\sqrt{2}}\left(\hat{a}_{\mathrm{V}}^{\mathrm{a}} - \exp\left(\mathrm{i}\varphi_a\right)\hat{a}_{\mathrm{H}}^{\mathrm{a}}\right).$$

Here, $\hat{a}_+^{\mathrm{a}}$ and $\hat{a}_-^{\mathrm{a}}$ are the photon annihilation operators corresponding to the light traveling towards photodetectors '+' and '−' in channel 'a', while operators $\hat{a}_{\mathrm{H}}^{\mathrm{a}}$ and $\hat{a}_{\mathrm{V}}^{\mathrm{a}}$ pertain to light polarizations at the input to the beamsplitter polarization prism, and φ_a is the relative phase delay between the orthogonally polarized photons in channel a. Similar relations apply to the other two channels, 'b' and 'c' (also on the strength of their equivalence).

The photon number operators at the input of the photodetectors, which are assumed to be ideal for simplicity (possessing unity quantum efficiency), are expressed as

$$\begin{aligned}&\hat{n}_+^{\mathrm{a}} = \hat{a}_+^+\hat{a}_+\,, \quad \hat{n}_-^{\mathrm{a}} = \hat{a}_-^+\hat{a}_-\,, \quad \hat{n}_+^{\mathrm{b}} = \hat{b}_+^+\hat{b}_+\,,\\ &\hat{n}_-^{\mathrm{b}} = \hat{b}_-^+\hat{b}_-\,, \quad \hat{n}_+^{\mathrm{c}} = \hat{c}_+^+\hat{c}_+\,, \quad \hat{n}_-^{\mathrm{c}} = \hat{c}_-^+\hat{c}_-\,.\end{aligned} \tag{14}$$

The difference between photon number operators after the beam splitter, for instance, in channel 'a', has the form

$$\hat{N}_{\mathrm{a}} = \hat{n}_+^{\mathrm{a}} - \hat{n}_-^{\mathrm{a}} = \exp\left(-\mathrm{i}\varphi_a\right)\hat{a}_{\mathrm{H}}^{\mathrm{a}+}\hat{a}_{\mathrm{V}}^{\mathrm{a}} + \exp\left(\mathrm{i}\varphi_a\right)\hat{a}_{\mathrm{V}}^{\mathrm{a}+}\hat{a}_{\mathrm{H}}^{\mathrm{a}}\,. \tag{15}$$

The value of the $\hat{N}_{\mathrm{a}}$ operator averaged over the GHZ state (5) is equal to zero: $\langle\hat{N}_{\mathrm{a}}\rangle = 0$. At the same time, the average number of photons recorded by photodetectors '+' and '−' separately is $\langle\hat{n}_+^{\mathrm{a}}\rangle = \langle\hat{n}_-^{\mathrm{a}}\rangle = 1/2$, i.e. the probabilities are the same and equal to 1/2.

The $\hat{N}_{\mathrm{a}}$ operator, which describes the events in channel a, should be ascribed the numerical value +1 or −1, depending on whether the photon is recorded by photodetector '+' or '−'. For two other channels, b and c, the situation is similar. Photon detection represents, therefore, a dichotomous event.

The correlation value to record photons simultaneously in two channels, for instance, in channels a and b — the event described by operator $\hat{N}_{\mathrm{ab}} = \hat{N}_{\mathrm{a}}\hat{N}_{\mathrm{b}}$ — also turns out to be equal to zero: $\langle\hat{N}_{\mathrm{ab}}\rangle = 0$. The results of experiment are given in Table 1.

The photon correlation is defined by the expression

$$\langle\hat{N}_{\mathrm{ab}}\rangle = \langle\hat{N}_{\mathrm{a}}\hat{N}_{\mathrm{b}}\rangle = \frac{1}{2}\frac{1}{2} + \frac{1}{2}\left(-\frac{1}{2}\right) + \left(-\frac{1}{2}\right)\frac{1}{2} + \left(-\frac{1}{2}\right)\left(-\frac{1}{2}\right) = 0\,,$$

and events in channels a and b turn out to be uncorrelated. It is evident that events in channels a and c are also so, as are those in channels b and c.

Table 1. Photon detection realizations in channels a and b; + (−) corresponds to recording by detector '+' ('−').

a	b
+	+
+	−
−	+
−	−

Table 2. Photon detection realizations in channels a, b, and c; + (−) corresponds to recording by detector '+' ('−').

a	b	c
+	+	+
+	−	−
−	+	−
−	−	+

The picture is radically different in the observation of triple events. The average value of triple photon number correlations is defined as

$$\begin{aligned}\langle\hat{N}_{\mathrm{a}}\hat{N}_{\mathrm{b}}\hat{N}_{\mathrm{c}}\rangle &= \langle\mathrm{GHZ}_3|\hat{N}_{\mathrm{a}}\hat{N}_{\mathrm{b}}\hat{N}_{\mathrm{c}}|\mathrm{GHZ}_3\rangle\\ &= \Gamma_{\mathrm{HV}}^{(6)} = \cos(\varphi_{\mathrm{a}} + \varphi_{\mathrm{b}} + \varphi_{\mathrm{c}})\,.\end{aligned} \tag{16}$$

The triple photon correlations implement the measurement of the $\Gamma_{\mathrm{HV}}^{(6)}$ correlation (12) in the setup under consideration. They exhibit a periodic dependence on the phase delays in detection channels (see also Ref. [13]). The pairwise photon correlations considered above do not exhibit this dependence.

Let the phase delays satisfy a condition $\varphi_{\mathrm{a}} + \varphi_{\mathrm{b}} + \varphi_{\mathrm{c}} = 0$ and, consequently, $\langle\hat{N}_{\mathrm{a}}\hat{N}_{\mathrm{b}}\hat{N}_{\mathrm{c}}\rangle = \Gamma_{\mathrm{HV}}^{(6)} = 1$. The results of the simultaneous recording of three photons in the case of interest are presented in Table 2.

As is clear from Table 2, only 4 out of $2^3 = 8$ possible outcomes are realized in the three-photon recording. In this case, the probabilities of recording photons in each of the detection channels '+' and '−' are equal to (1/2), in accordance with the results obtained above. The pairwise '+' probability is equal to 1/4 in any two channels. The events in the channels seemingly are again statistically independent, but the probability of all three being '+' is also equal to 1/4. On the one hand, this confirms the nonfactorable character of state (5); on the other hand, this is a complete reproduction of the statistical Bernstein paradox. It is significant that the channels are perfectly equivalent, i.e. the paradox is implemented 'in pure form', unlike the tetrahedron case.

In the classical Bernstein paradox, triple correlations are attributable to the tetrahedron configuration, i.e. to its structure, while in the arrangement shown in Fig. 2 they are attributable to the structure of the GHZ state (5). The polarization beam splitters transform this initial structure, and the dependence of the result on phase delays confirms the wave nature of quantum objects. As a result, the experiment under consideration also exhibits a specifically quantum character, which is nonexistent in the classical Bernstein paradox.

One can see from Table 2 that the probability of simultaneously recording three photons by detectors '−' is equal to zero, while the probabilistic situation with the recording by one and two detectors is the same as in the previous '+' case. The aforesaid suggests the following conclusion. From the standpoint of recording three plusses, the photons are correlated, and from the standpoint of recording three minuses, the photons turn out to be anticorrelated. It is easily seen that the situation with the detection of three photons simultaneously is inverted if we take a value of $\langle\hat{N}_{\mathrm{a}}\hat{N}_{\mathrm{b}}\hat{N}_{\mathrm{c}}\rangle = -1$. When a value of $\cos(\varphi_{\mathrm{a}} + \varphi_{\mathrm{b}} + \varphi_{\mathrm{c}}) = 0$ in expression (16) is selected, the photon correlation in the detectors is completely lacking.

It is pertinent to note that some idealization of the experimental setup, which implies the utilization of photo-

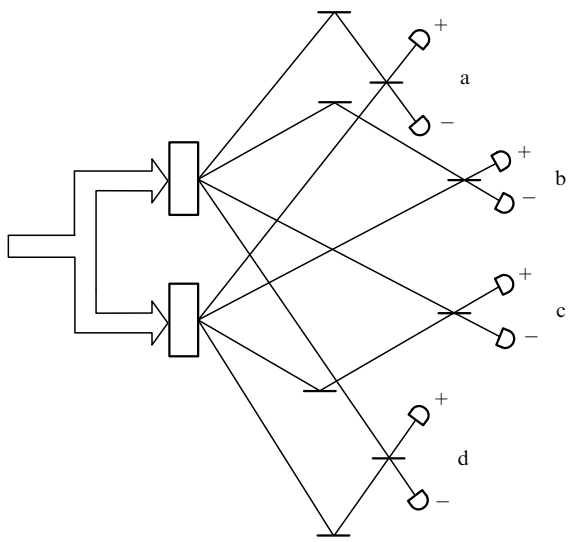

Figure 3. Schematic of the four-photon quantum realization of the Bernstein paradox: two nonlinear crystals generate correlated photon quadruples under the action of a common laser pump, one crystal producing photon quadruples only in one polarization plane, and the other crystal producing them in the mutually orthogonal plane. The photons from adjacent channels are then mixed using beam splitters, which are polarization Wollaston prisms, and directed to a detector with the sign + or sign −.

detectors with a unity quantum yield, will not impair anything in practice: it is easily comprehended that account should be taken of only those experimental realizations in the final list in which all three detectors were actuated; the remaining realizations should be discarded.

Even more impressive is the four-channel version of the experiment involving a four-cubit state (6), i.e. the simultaneous detection of quadruples of entangled photons. To form this state, use can be made of piezocrystals which possess quadratic nonlinearity $\chi^{(2)}$ usually attended by fourth-order nonlinearity $\chi^{(4)}$, although the latter is considerably weaker than $\chi^{(2)}$, i.e. one would have to wait for the emergence of a quadruple of photons for a relatively long time (much longer than for the emergence of a correlated photon pair — a *biphoton*). In this connection, certain hopes may be pinned on the use of aperiodic photonic crystals [40, 41], which implement quasiphase-matched parametric interactions. These are precisely the states which were first proposed for the realization of the quantum GHZ paradox (see, for instance, Ref. [17]).

As in Fig. 2, we introduce beam-splitting prisms with the same spatial orientation into the channels. If a difficulty arises in that the photon quadruples should now possess alternately one plane polarization and a mutually orthogonal one, it is possible to mount two crystals with a common laser pump, one of the crystals producing photons of one polarization and the other producing mutually orthogonally polarized photons, as shown in Fig. 3. The result will be the same.

Calculations similar to those made earlier lead to the same average, i.e. to perfect correlation of the product $\langle \hat{N}_a \hat{N}_b \hat{N}_c \hat{N}_d \rangle$, provided that equality $\cos(\varphi_a + \varphi_b + \varphi_c + \varphi_d) = 1$ holds true:

$$\langle \hat{N}_a \hat{N}_b \hat{N}_c \hat{N}_d \rangle = \Gamma_{HV}^{(8)} = 1 \,. \tag{17}$$

The experimental outcomes possible in this case are collected in Table 3.

Table 3. Photon detection realizations in channels a, b, c, d: + (−) corresponds to recording by detector '+' ('−').

a	b	c	d
+	+	+	+
+	+	−	−
+	−	+	−
+	−	−	+
−	+	+	−
−	+	−	+
−	−	+	+
−	−	−	−

Only 8 out of possible $2^4 = 16$ outcomes are realized here. The probabilities for the occurrence of + and − in every channel are, of course, equal (1/2). The pairwise probability of recording + is equal to 1/4 in every channel pair. Furthermore, the probability of three plusses occurring is also equal to 1/8, i.e. there are better grounds to draw a conclusion about the statistical independence of the events in different channels than in the previous case. Everything is 'marred' by the probability of the occurrence of all four plusses: it is equal to 1/8!

A further increase in the number of channels would yield even more paradoxical results. Such are the possibilities of entangled quantum states.

As noted by M B Mensky, a classical analogue of the four-channel version described above is a regular octahedron painted with different colors, with the understanding that the results of photon detection given in Table 3 are considered the reproduction of equiprobable outcomes of polyhedron faces. Also, a many-colored regular dodecahedron may be an analogue of the three-channel scheme.

Putting plusses and minuses on every octahedron face according to the rows of Table 3 simplifies the situation still further. The paradox is also implemented in this manner.

So, our proposed quantum paradox, strictly speaking, is not such in a pure form: its results may be imitated by regular classical polyhedrons. The special quantum nature may be seen in that our experimental setups are perfectly symmetrical. The colored polyhedral figures are not symmetrical, and the asymmetrical result of experiments with them (throwing on a table) is a consequence of precisely this structural asymmetry. The asymmetry of the quantum result for a symmetric quantum scheme is a consequence of the special nature of purely quantum entangled states. In this sense, our paradox is purely quantum, indeed.

We emphasize once again that the quantum Bernstein paradox demonstrates clearly the peculiarities of entangled quantum states in probabilistic terms. A consequence of these peculiarities is the violation of relationships derived from the standpoint of classical calculations — a fact which has been experimentally demonstrated more than once, as noted at the beginning of the paper. No classical signals or wave packets can produce a like effect. Only three- and larger-component entangled quantum states of photons, spins, phonons, etc. permit demonstrating the Bernstein paradox in its most impressive, attractive, and nontrivial embodiment.

Acknowledgments

The authors express their appreciation to M B Mensky for fruitful and helpful discussions and constructive remarks.

This work was supported by the Russian Foundation for Basic Research under grant No. 11-02-00610.

References

1. Mandelstam L I *Lektsii po Optike, Teorii Otnositel'nosti i Kvantovoi Mekhanike* (Lectures on Optics, Relativity Theory, and Quantum Mechanics) (Moscow: Nauka, 1972)
2. Einstein A, Podolsky B, Rosen N *Phys. Rev.* **47** 777 (1935)
3. Fock V A, Einstein A, Podolsky B, Rosen N, Bohr N *Usp. Fiz. Nauk* **16** 436 (1936)
4. Bohr N *Phys. Rev.* **48** 696 (1935)
5. Klyshko D N *Sov. Phys. Usp.* **31** 74 (1988) [*Usp. Fiz. Nauk* **154** 133 (1988)]
6. Klyshko D N *Sov. Phys. Usp.* **32** 555 (1989) [*Usp. Fiz. Nauk* **158** 327 (1989)]
7. Kadomtsev B B *Phys. Usp.* **37** 425 (1994) [*Usp. Fiz. Nauk* **164** 449 (1994)]
8. Kadomtsev B B *Phys. Usp.* **46** 1183 (2003) [*Usp. Fiz. Nauk* **173** 1221 (2003)]
9. Reid M D et al. *Rev. Mod. Phys.* **81** 1727 (2009)
10. Bell J S *Physics* **1** 195 (1964)
11. Greenberger D M, Horne M, Zeilinger A, in *Bell's Theorem, Quantum Theory and Conceptions of the Universe* (Fundamental Theories of Physics, Vol. 37, Ed. M Kafatos) (Dordrecht: Kluwer Acad., 1989) p. 69
12. Greenberger D M, Horne M A, Zeilinger A *Phys. Today* **46** (8) 22 (1993)
13. Pan J-W et al. *Rev. Mod. Phys.* **84** 777 (2012)
14. Clauser J F et al. *Phys. Rev. Lett.* **23** 880 (1969)
15. Mermin N D *Phys. Rev. Lett.* **65** 1838 (1990)
16. Ardehali M *Phys. Rev. A* **46** 5375 (1992)
17. Belinskii A V, Klyshko D N *Phys. Usp.* **36** 653 (1993) [*Usp. Fiz. Nauk* **163** (8) 1 (1993)]
18. Brunner N, Sharam J, Vértesi T *Phys. Rev. Lett.* **108** 110501 (2012)
19. Lee S, Lee J, Kim J *Phys. Rev. A* **79** 032309 (2009)
20. Belinskii A V *Phys. Usp.* **40** 305 (1997) [*Usp. Fiz. Nauk* **167** 323 (1997)]
21. Belinskii A V *Phys. Usp.* **46** 877 (2003) [*Usp. Fiz. Nauk* **173** 905 (2003)]
22. Belinskii A V, Granovskii A A *JETP Lett.* **93** 495 (2011) [*Pis'ma Zh. Eksp. Teor. Fiz.* **93** 552 (2011)]
23. Menskii M B *Phys. Usp.* **41** 923 (1998) [*Usp. Fiz. Nauk* **168** 1017 (1998)]
24. Mensky M B *Phys. Usp.* **54** 519 (2011) [*Usp. Fiz. Nauk* **181** 543 (2011)]
25. Mensky M B *Quantum Measurements and Decoherence*: *Models and Phenomenology* (Dordrecht: Kluwer Acad. Publ., 2000) [Translated into Russian: *Kvantovye Izmereniya i Dekogerentsiya*: *Modeli i Fenomenologiya* (Moscow: Fizmatlit, 2001)]
26. Facchi P, Pascazio S "Quantum Zeno and inverse quantum Zeno effects" *Prog. Opt.* **42** 147 (2001)
27. Chirkin A S, Rodionov A V *J. Russ. Laser Res.* **26** 83 (2005)
28. Belinsky A V *Kvantovye Izmereniya* (Quantum Measurements) (Moscow: BINOM. Lab. Znanii, 2012)
29. Kadomtsev B B *Dinamika i Informatsiya* (Dynamics and Information) 2nd ed. (Moscow: Redaktsiya Zhurnala "Uspekhi Fizicheskikh Nauk", 1999)
30. Megidish E et al., arXiv:1209.4191
31. Chirkin A S, Belyaeva O V, Belinsky A V *JETP* **116** 39 (2013) [*Zh. Eksp. Teor. Fiz.* **143** 48 (2013)]
32. Stoyanov J M *Counterexamples in Probability* (Chichester: Wiley, 1997) [Translated into Russian: *Kontrprimery v Teorii Veroyatnosti* (Moscow: Faktorial, 1999)]
33. Zhukova I S, Malinovskaya G A, Saichev A I *Analiz Sluchainykh Protsessov i Polei* (Analysis of Random Processes and Fields) (Nizhny Novgorod: Nizhegorod. Gos. Univ., 2006)
34. Furusawa A, Takei N *Phys. Rep.* **443** 97 (2007)
35. Bargatin I V, Grishanin B A, Zadkov V N *Phys. Usp.* **44** 597 (2001) [*Usp. Fiz. Nauk* **171** 625 (2001)]
36. Elyutin P V, Klyshko D N *Phys. Lett. A* **149** 241 (1990)
37. Bencheikh K et al. *C.R. Physique* **8** 206 (2007)
38. Mandel L, Wolf E *Optical Coherence and Quantum Optics* (Cambridge: Cambridge Univ. Press, 1995) [Translated into Russian: *Opticheskaya Kogerentnost' i Kvantovaya Optika* (Moscow: Fizmatlit, 2000)]
39. Belyaeva O V, Chirkin A S *Phys. Scripta* **87** 038101 (2013)
40. Chirkin A S, Shutov I V *JETP Lett.* **86** 693 (2007) [*Pis'ma Zh. Eksp. Teor. Fiz.* **86** 803 (2007)]
41. Chirkin A S, Shutov I V *JETP* **109** 547 (2009) [*Zh. Eksp. Teor. Fiz.* **136** 639 (2009)]