PACS numbers: **75.76.+j**, **78.56.–a**, **85.75.–d**
DOI: 10.3367/UFNe.0180.201007i.0773

Spin photocurrents in semiconductors

S A Tarasenko

1. Introduction. Phenomenological description

The possibility of efficiently controling spin states of electrons, holes, and other quasiparticles in low-dimensional structures is a key problem in semiconductor spintronics. Owing to spin–orbit interaction, the spin state of a quasiparticle can be changed by affecting its orbital motion. One vivid manifestation of spin–orbit interaction is the spin Hall effect, i.e., the appearance of a transverse spin flow on passing an electric current [1–4]. The spin Hall effect shows itself in semiconductors with free charge carriers as a result of the spin-dependent scattering of carriers on impurities or phonons; it can also be caused by a spin–orbit splitting of electronic states. The spin currents induced by an electric field can also arise during the ballistic transport of electrons, for instance, in tunneling structures. In the last case, the effect is related to the dependence of the tunneling transparency of the potential barrier on the mutual orientation of the electron spin and wave vector [5, 6].

In noncentrosymmetric semiconductor structures, the spin currents can be induced by optical methods [7, 8]. In this case, the generation of a pure spin current, i.e., of a flow of spins without a transfer of an electric charge, is possible. Such a situation corresponds to a nonequilibrium distribution, at which the electrons with a fixed spin orientation move predominantly in one direction and an equal number of particles with the opposite spin move in the opposite direction. The pure spin currents result in a spatial separation of carriers with opposite spin orientations and, in particular, in the emergence of spin polarization near the edges of the sample.

A flux of spins (or, in the general case, a flux of angular momenta) is described by a second-rank pseudotensor J whose components J^{α}_{β} correspond to the flux of spins oriented along the α-axis in the direction β; here, α and β are the Cartesian coordinates. In the regime that is linear in light intensity I, the polarization dependence of the components of the spin current is given by the following phenomenological relation:

$$J^{\alpha}_{\beta} = I\sum_{\gamma\delta} Q_{\alpha\beta\gamma\delta}\, e_{\gamma} e^{*}_{\delta} + I\sum_{\nu\gamma\delta} D_{\alpha\beta\nu\gamma\delta}\, q_{\nu}\, e_{\gamma} e^{*}_{\delta}, \qquad (1)$$

where $\mathbf{e}$ is the unit complex vector of light polarization, and $\mathbf{q}$ is the wave vector of the photon. The tensor Q describes spin currents whose components are determined by the light polarization and spatial symmetry of the crystal; Q is nonzero only in noncentrosymmetric media. The tensor D is responsible for the possible contributions to the spin current connected with the transfer of photon momenta to the electron system; in this paper, we neglect these contributions. The absorption of circularly polarized light in semiconductors usually leads to the emergence of a significant spin polarization of photoexcited carriers [9], which hampers the observation of pure spin currents. Therefore, we shall consider spin currents induced by linearly polarized light and assume that the vector $\mathbf{e}$ is real. In this case, the polarization dependence of the spin current components is described by the phenomenological relation (1) in which the tensor Q is symmetrical in the last two indices. A detailed symmetry-based analysis of spin photocurrents in bulk semiconductors and quantum wells grown along different crystallographic directions is given in paper [10].

2. Direct optical transitions in quantum wells

The effect of the generation of spin currents in direct interband or intersubband optical transitions under the influence of linearly polarized light is related to spin-dependent terms that are odd in the wave vector $\mathbf{k}$ in the spectrum of quasiparticles or in the probabilities of optical transitions. These mechanisms can be most vividly explained through the example of optical transitions from the subband of heavy holes (hh1) to the electron subband (e1) in quantum wells grown from semiconductors with a zincblende type lattice along the direction $z' \parallel [110]$.

In quantum wells with the (110) orientation, the effective Hamiltonians describing the states in the conduction band Γ_6 and in the valence band Γ_8 contain contributions that are proportional to $\sigma_{z'}k_{x'}$ and to $J_{z'}k_{x'}$, respectively. Here, $\sigma_{z'}$ is the Pauli matrix; $J_{z'}$ is a matrix with a 4×4 dimension corresponding to the angular momentum 3/2, and $x' \parallel [1\bar{1}0]$ and $y' \parallel [00\bar{1}]$ are the coordinates in the plane of the interfaces. A spin–orbit interaction of this type gives rise to a splitting of the electron subband e1 into branches with spin projections $|\pm 1/2\rangle$, and of the hole subband hh1 into branches $|\pm 3/2\rangle$ (Fig. 1). The selection rules [9] allow only transitions $|+3/2\rangle \to |+1/2\rangle$ and $|-3/2\rangle \to |-1/2\rangle$, which are shown by vertical arrows in Fig. 1. Upon excitation by linearly polarized light, the intensities of both processes coincide; therefore, the average spin of photoelectrons is equal to zero. However, because of the splitting of the subbands e1 and hh1 that is linear in the wave vector, the electrons with a fixed spin orientation are produced with a nonzero average velocity in the plane of the quantum well [8]. Such an asymmetry of the photoexcitation leads to the appearance of an electron flux $\mathbf{i}_{\pm 1/2}$ inside each spin subband. The fluxes $\mathbf{i}_{\pm 1/2}$ are equal in magnitude but are directed oppositely; therefore, this distribution of electrons in the momentum and spin spaces corresponds to a pure spin current.

Under the conditions of a stationary excitation, the density of the spin current in the subband e1 has the form

$$J^{z'}_{x'} = \frac{\gamma^{(\mathrm{e1})}_{z'x'} m_{\mathrm{e}} + \gamma^{(\mathrm{hh1})}_{z'x'} m_{\mathrm{h}}}{2\hbar(m_{\mathrm{e}} + m_{\mathrm{h}})}\left(\tau_{\mathrm{e}} + \tilde{\varepsilon}\,\frac{\mathrm{d}\tau_{\mathrm{e}}}{\mathrm{d}\tilde{\varepsilon}}\right)\frac{\eta_{\mathrm{cv}}}{\hbar\omega} I, \qquad (2)$$

where $\gamma^{(\mathrm{e1})}_{z'x'}$ and $\gamma^{(\mathrm{hh1})}_{z'x'}$ are constants determining the linear-in-$\mathbf{k}$ splitting of the subbands e1 and hh1; m_{e} and m_{h} are the effective masses of electrons and holes for motion in the plane of the quantum well, respectively; τ_{e} is the relaxation time of the spin current, which coincides with the time of relaxation

S A Tarasenko Ioffe Physical-Technical Institute,
Russian Academy of Sciences, St. Petersburg, Russian Federation
E-mail: tarasenko@coherent.ioffe.ru

Uspekhi Fizicheskikh Nauk **180** (7) 773–777 (2010)
DOI: 10.3367/UFNr.0180.201007i.0773
Translated by S N Gorin; edited by A Radzig

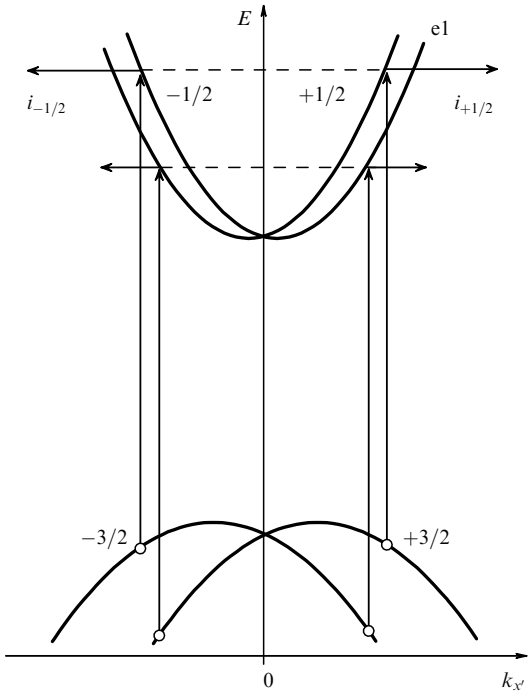

Figure 1. Mechanism of the generation of a spin current during interband optical transitions in quantum wells due to the subband splitting linear in the wave vector.

of the electron momentum if the interparticle interaction is insignificant; $\tilde{\varepsilon} = (\hbar\omega - E_g^{QW})m_h/(m_e + m_h)$ is the kinetic energy of electrons at the moment of generation; ω is the light frequency; E_g^{QW} is the effective band gap in the quantum well, and η_{cv} is the absorbed fraction of the light flux. The magnitude of the spin current (2) is determined by both the time τ_e and the derivative $d\tau_e/d\tilde{\varepsilon}$; therefore, at low temperatures the current increases significantly if the electron energy $\tilde{\varepsilon}$ is close to the energy $\hbar\Omega_{LO}$ of the optical photon. In the region of such a resonance, the spin current density can reach

$$J_{x'}^{z'} = -\frac{\tau_e^* \sqrt{2m_e\hbar\Omega_{LO}}}{2\pi} \frac{\eta_{cv}}{\hbar\omega} I, \tag{3}$$

where τ_e^* is the time of momentum relaxation of electrons with an energy $\tilde{\varepsilon} < \hbar\Omega_{LO}$, and the time of momentum relaxation of carriers with an energy $\tilde{\varepsilon} > \hbar\Omega_{LO}$ is assumed to be much shorter.

The spin current (2) emerging during interband optical transitions near the absorption edge in the geometry of the normal light incidence is independent of the radiation polarization. The polarization dependence of spin photocurrents caused by the splitting of the spectrum arises, if we take into account the intermixing of light and heavy holes at a nonzero wave vector in the plane of the quantum well [11–13].

Another mechanism of generation of spin photocurrents is connected with the linear-in-wave-vector spin-dependent terms in the probabilities of optical transitions. Such terms appear if taking into account the **kp** admixture of states of the higher conduction band Γ_{15}^c to the wave functions of the valence band and conduction band in cubic noncentrosymmetric crystals [14]. Calculations [10] show that this contribution to the components of the spin current flowing in quantum wells with an (110) orientation during optical transitions from the subband of heavy holes is determined by the expressions

$$J_{x'}^{z'} = \beta(e_{y'}^2 - e_{x'}^2)\,\frac{\tau_e\,\tilde{\varepsilon}}{\hbar}\,\frac{\eta_{cv}}{\hbar\omega}\,I, \quad J_{y'}^{z'} = \beta e_{x'}e_{y'}\,\frac{\tau_e\,\tilde{\varepsilon}}{\hbar}\,\frac{\eta_{cv}}{\hbar\omega}\,I, \tag{4}$$

where β is the coefficient with a dimensionality of length, which is determined by the band parameters of the semiconductor. In contrast to contribution (2), the spin photocurrent (4) strongly depends on the polarization of the exciting radiation even near the absorption edge and it does not appear during excitation by unpolarized light, when $\overline{e_{x'}^2} = \overline{e_{y'}^2} = 1/2$, and $\overline{e_{x'}e_{y'}} = 0$. A comparison of the contributions (2) and (4) shows that, depending on the light frequency, these contributions can be comparable, although one can dominate over the other.

The spatial separation of electrons with opposite spins, caused by pure spin photocurrent, was observed at room temperature in structures with GaAs/AlGaAs quantum wells in Ref. [15]. The authors used the pump–probe technique with a high spatial resolution. The linearly polarized, focused pumping pulse induced interband optical transitions; the spatial distribution of spin polarization was studied by the spin Kerr effect method using a probing light pulse with a photon energy corresponding to the band gap.

The mechanisms responsible for the generation of pure spin currents upon absorption of linearly polarized light can lead to the generation of a stationary electric current during the excitation by circularly polarized radiation. Such a circular photogalvanic effect [16] caused by interband optical transitions in quantum wells has been studied both theoretically and experimentally in Refs [17–21].

3. Intrasubband optical transitions

The main contribution to the spin current arising upon the absorption of light by free charge carriers is due to the spin-dependent asymmetry of the electron scattering processes accompanying intrasubband optical transitions. The matrix elements of electron scattering on static defects or phonons in quantum wells contain spin-dependent contributions that are odd in the wave vector [22, 23] and can be written out as

$$V_{\mathbf{k}'\mathbf{k}} = V_0 + \sum_{\alpha\beta} V_{\alpha\beta}\,\sigma_\alpha(k_\beta + k'_\beta)\,, \tag{5}$$

where $\mathbf{k}$ and $\mathbf{k}'$ are the initial and final electron wave vectors. Because of the asymmetry of scattering, the electrons with opposite spins, excited by light from the bottom of the size-quantized subband, pass into final states predominantly with opposite wave vectors, which does lead to the generation of pure spin current [24]. The polarization dependences of the components of the spin photocurrent have the form

$$J_x^\alpha = -\frac{\tau_e}{\hbar}\left(\frac{\langle V_0 V_{\alpha x}\rangle}{V_0^2}\,\frac{e_x^2 - e_y^2}{2} + \frac{\langle V_0 V_{\alpha y}\rangle}{V_0^2}\,e_x e_y\right) I\eta_{e1}\,, \tag{6}$$

where η_{e1} is the fraction of the electromagnetic radiation that is absorbed in the quantum well upon intrasubband optical transitions and normal incidence of light, and x and y are the coordinates in the plane of the interfaces; the angle brackets stand for averaging over the scatterers. The other components of the spin photocurrent J_y^α can be obtained from formula (6) by the substitution $x \leftrightarrow y$.

The spin-dependent scattering of electrons gives rise to the generation of pure spin current not only when there is intrasubband absorption of light, but also if the electron gas is disturbed from the thermodynamic equilibrium with the crystal lattice [10]. In this situation, the spin current arises as a result of an energy relaxation of electrons on phonons, irrespective of the way in which the thermodynamic equilibrium between the electron and phonon subsystems was disturbed.

The mechanisms responsible for the appearance of spin currents with the absorption of light by free charge carriers lead to the generation of electric current if the carriers are spin-polarized, for instance, by an external magnetic field [24]. Indeed, in the case of intrasubband optical transitions, the fluxes $\mathbf{i}_{+1/2}$ and $\mathbf{i}_{-1/2}$ depend on the concentration of carriers in spin subbands, $n_{+1/2}$ and $n_{-1/2}$, respectively. In the system of spin-polarized particles in which $n_{+1/2} \neq n_{-1/2}$, the fluxes $\mathbf{i}_{+1/2}$ and $\mathbf{i}_{-1/2}$ do not compensate for each other, thus leading to the appearance of a resultant electric current. In the case of small spin polarization of electrons, the photocurrent caused by the disbalance of the spin current in the magnetic field is determined by the expression

$$j_\beta^{(\mathrm{Pol})} = 4eN_\mathrm{e} \sum_\alpha s_\alpha \frac{\partial J_\beta^\alpha}{\partial N_\mathrm{e}}\,, \tag{7}$$

where $\mathbf{s}$ is the equilibrium electron spin. The spin current J_β^α in Eqn (7) is considered formally to be a function of the concentration N_e of carriers. In particular, for a nondegenerate electron gas, when $J_\beta^\alpha \propto N_\mathrm{e}$ and $N_\mathrm{e}\partial J_\beta^\alpha/\partial N_\mathrm{e} = J_\beta^\alpha$, the photocurrent is directly proportional to the spin current.

The electric current caused by the disbalance of the spin photocurrent is most vividly manifested in structures with magnetic impurities, in which the Zeeman splitting of electronic states increases significantly due to the exchange interaction between the spins of free electrons and magnetic moments of impurities [25]. Such experiments on the detection and investigation of magnetically induced photocurrents were performed on (001)-oriented quantum wells in n-type $Cd_{1-x}Mn_xTe$ with different concentrations of manganese atoms. The photocurrent was excited by linearly polarized terahertz radiation, which caused intrasubband optical transitions, in a magnetic field oriented in the plane of interfaces. The dependences of the photo-emf on the magnetic field induction for the $Cd_{1-x}Mn_xTe$ quantum well with $x = 0.015$, obtained at various temperatures, are given in Fig. 2. It is seen that at a low temperature, $T = 1.9$ K, the photocurrent increases linearly with an increase in the magnetic field in weak fields, and saturates in fields $B \approx 6$ T. With increasing temperature, the photocurrent decreases and even changes sign, and the nonlinearity in the magnetic field disappears. Such a behavior is related to the orientation of Mn ions by the external magnetic field and qualitatively corresponds to the dependence of the Zeeman splitting of electronic states on the magnetic field and temperature in dilute magnetic semiconductors $Cd_{1-x}Mn_xTe$.

When considering the microscopic mechanisms for the generation of an electric current in structures with magnetic impurities, it is necessary to take into account that the orientation of the Mn magnetic moments by the external field results in both giant Zeeman splitting of electronic states and spin-dependent exchange scattering of free electrons by

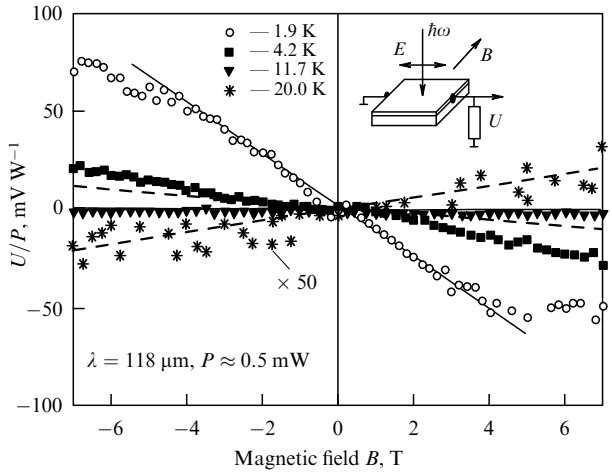

Figure 2. Dependence of the photo-emf on the magnetic field induction in a structure with a single n-type $Cd_{1-x}Mn_xTe$ quantum well upon intrasubband excitation by linearly polarized light at various temperatures. The inset to the figure shows the geometry of the experiment.

magnetic impurities. The latter effect gives rise to an additional contribution to the electric current, which is due to the difference in the momentum relaxation times of carriers in spin subbands. Indeed, in a structure with polarized Mn ions the scattering probabilities of electrons with spins oriented parallel to and against the Mn magnetic moments are different. This leads to a difference in the momentum relaxation times $\tau_{\mathrm{e},+1/2}$ and $\tau_{\mathrm{e},-1/2}$ in the spin subbands and, consequently, causes an electric current. To estimate this contribution to the photocurrent, we assume that the momentum relaxation of electrons is connected with their scattering by manganese ions, and the Hamiltonian of this interaction has the form

$$H_{\mathrm{el-Mn}} = \sum_i \left[u - \alpha(\mathbf{J}_i^{(\mathrm{Mn})}\boldsymbol{\sigma})\right] \delta(\mathbf{r} - \mathbf{R}_i)\,, \tag{8}$$

where i is the index of the impurity, $\mathbf{J}_i^{(\mathrm{Mn})}$ is the vector composed of the matrices of the total angular momentum 5/2, and $\mathbf{R}_i$ is the position of the impurity. The calculations show that the density of the electric current arising as a result of the difference in the times $\tau_{\mathrm{e},+1/2}$ and $\tau_{\mathrm{e},-1/2}$ for $|\alpha| \ll |u|$ takes on the form

$$j_\beta^{(\mathrm{Sc})} = 4e\tau_\mathrm{e} \frac{\alpha}{u} \sum_\alpha S_\alpha^{(\mathrm{Mn})} \frac{\partial J_\beta^\alpha}{\partial \tau_\mathrm{e}}\,, \tag{9}$$

where $\mathbf{S}^{(\mathrm{Mn})}$ is the average spin of Mn atoms, and J_β^α is the spin current density, which is formally considered in expression (9) as a function of τ_e. In structures with magnetic impurities, the photocurrents (7) and (9) are added.

Acknowledgments. I am grateful to E L Ivchenko, V V Bel'kov, and S D Ganichev for the fruitful discussions. This work was supported in part by the Russian Foundation for Basic Research, by a grant from the President of the Russian Federation for young scientists (MD-1717.2009.2), and by the Dinasty Foundation (CFPM).

References

1. D'yakonov M I, Perel' V I *Pis'ma Zh. Eksp. Teor. Fiz.* **13** 657 (1971) [*JETP Lett.* **13** 467 (1971)]
2. Hirsch J E *Phys. Rev. Lett.* **83** 1834 (1999)
3. Kato Y K et al. *Science* **306** 1910 (2004)
4. Wunderlich J et al. *Phys. Rev. Lett.* **94** 047204 (2005)
5. Zakharova A, Vasko F T, Ryzhii V *J. Phys. Condens. Matter* **6** 7537 (1994)
6. Perel' V I et al. *Phys. Rev. B* **67** 201304(R) (2003)
7. Bhat R D R et al. *Phys. Rev. Lett.* **94** 096603 (2005)
8. Tarasenko S A , Ivchenko E I *Pis'ma Zh. Eksp. Teor. Fiz.* **81** 292 (2005) [*JETP Lett.* **81** 231 (2005)]
9. Meier F, Zakharchenya B P (Eds) *Optical Orientation* (Amsterdam: North-Holland, 1984) [Translated into Russian (Leningrad: Nauka, 1989)]
10. Ivchenko E L, Tarasenko S A *Semicond. Sci. Technol.* **23** 114007 (2008)
11. Zhou B, Shen S-Q *Phys. Rev. B* **75** 045339 (2007)
12. Hu K G *Solid State Commun.* **148** 283 (2008)
13. Tarasenko S A *Phys. Rev. B* **72** 113302 (2005)
14. Lyanda-Geller Yu B, Pikus G E *Fiz. Tverd. Tela* **31** (12) 77 (1989) [*Sov. Phys. Solid State* **31** 2068 (1989)]
15. Zhao H et al. *Phys. Rev. B* **72** 201302(R) (2005)
16. Ivchenko E L *Usp. Fiz. Nauk* **172** 1461 (2002) [*Phys. Usp.* **45** 1299 (2002)]
17. Golub L E *Phys. Rev. B* **67** 235320 (2003)
18. Khurgin J B *Phys. Rev. B* **73** 033317 (2006)
19. Bel'kov V V et al. *Solid State Commun.* **128** 283 (2003)
20. Bieler M et al. *Appl. Phys. Lett.* **86** 061102 (2005)
21. Yang C L et al. *Phys. Rev. Lett.* **96** 186605 (2006)
22. Averkiev N S, Golub L E, Willander M *J. Phys. Condens. Matter* **14** R271 (2002)
23. Ivchenko E L, Tarasenko S A *Zh. Eksp. Teor. Fiz.* **126** 426 (2004) [*JETP* **99** 379 (2004)]
24. Ganichev S D et al. *Nature Phys.* **2** 609 (2006)
25. Ganichev S D et al. *Phys. Rev. Lett.* **102** 156602 (2009)

PACS numbers: **75.76.+j**, **76.30.–v**, **85.75.–d**
DOI: 10.3367/UFNe.0180.201007j.0777

Spin relaxation anisotropy in two-dimensional semiconductors

N S Averkiev

1. Introduction

The main task of the new field in electronics — spintronics — is the creation of devices which use spin degrees of freedom for the storage, recording, and readout of information. Contemporary electronics is oriented toward the use of two-dimensional semiconductor structures with a high mobility of charge carriers; therefore, a fundamental problem of studying the processes of spin dynamics precisely in low-dimensional nanostructures exists. The main difference between two-dimensional structures and bulk semiconductors is the anisotropy of physical properties caused by the restriction of the motion of charge carriers along one crystallographic direction. The main properties of spin dynamics are also connected with this very feature, although the spin can be oriented in any of the three spatial directions, even in two-dimensional systems. Spin relaxation constitutes a process of the disappearance of the ensemble-averaged spin of charge carriers. Indeed, spin–orbit interaction in each microscopic scattering event can result in a change of the sign of the electron-spin projection onto a preferred axis to the opposite sign. The total magnitude of the square of the spin momentum remains unaltered in this case. The process of the loss of the average spin upon the interaction of electrons with, for example, impurities can be described in terms of the following kinetic equations

$$\dot{n}_\uparrow = -Wn_\uparrow + Wn_\downarrow\,, \quad \dot{n}_\downarrow = -Wn_\downarrow + Wn_\uparrow, \tag{1}$$

where $n_\uparrow$ and $n_\downarrow$ are the numbers of electrons with spins up and down, respectively, and W describes the rate of transitions with spin flips. It follows from Eqn (1) that $\dot{n}_\uparrow + \dot{n}_\downarrow = 0$, and for the total spin $S = (n_\uparrow - n_\downarrow)/2$ we obtain

$$\dot{S} = -\frac{S}{\tau_s}\,, \quad \tau_s^{-1} = 2W\,, \tag{2}$$

where τ_s is the spin relaxation time. Equation (2) describes the disappearance of the average spin because of the spin flip in each scattering event. The quantity W can be due to the spin–orbit interaction (Elliott–Yafet mechanism of spin relaxation) or by the contact magnetic interaction of an electron or a hole with magnetic ions. However, in semiconductors at not too low temperatures the most significant mechanism of spin relaxation is the kinetic mechanism suggested by D'yakonov and Perel' [1]. In terms of this mechanism, the disappearance of the average spin occurs not at the instant of scattering, but rather between the instants of collisions, because of the precession of an electron spin in the effective magnetic field caused by spin–orbit interaction. Indeed, in a magnetic field the spin precesses about the field vector in such a manner that only the spin projection onto the field direction is retained, while the average values of the transverse components of the spin are lost. However, if this effective field changes direction, the relaxation of all spin components will occur. This process can be described by the following equation

$$\dot{\mathbf{S}} + \mathbf{S} \times \mathbf{\Omega} = \frac{\langle \mathbf{S} \rangle - \mathbf{S}}{\tau}\,, \tag{3}$$

where $\mathbf{\Omega}(\mathbf{k})$ is the frequency of spin precession in the effective magnetic field; $\mathbf{S}(\mathbf{k})$ is the spin density of the ensemble of electrons; $\langle \mathbf{S} \rangle$ is the value of $\mathbf{S}$ averaged over the angles of the vector $\mathbf{k}$, and τ is the time of isotropization of the electron distribution function over the angles of the vector $\mathbf{k}$. When deriving Eqn (3), it was assumed that the time of energy relaxation is much greater than τ and, thus, $\mathbf{S}(\mathbf{k})$ represents the spin density at a fixed energy. In addition, it was assumed that in formula (3) the electron lifetime is much greater than the spin relaxation time τ_s. Usually, the time τ proves to be on the order of the time of the momentum relaxation, and $\Omega\tau \ll 1$ (with $\langle \mathbf{\Omega} \rangle \equiv 0$). In this case, the angle of rotation between collisions proves to be small, so that the spin relaxation will occur via particle diffusion. As is seen from Eqn (3), the components of $\mathbf{S}$ that are dependent on the angles of the vector $\mathbf{k}$ relax in a time τ, and the average spin relaxes in a longer time and, in view of the inequality $\Omega\tau \ll 1$, the time of spin relaxation should be relatively large, $\tau_s \gg \tau$. It can be

N S Averkiev Ioffe Physical-Technical Institute,
Russian Academy of Sciences, St. Petersburg, Russian Federation
E-mail: averkiev@les.ioffe.ru

Uspekhi Fizicheskikh Nauk **180** (7) 777 – 780 (2010)
DOI: 10.3367/UFNr.0180.201007j.0777
Translated by S N Gorin; edited by A Radzig