2. Ma Sh *Modern Theory of Critical Phenomena* (Reading, Mass.: W.A. Benjamin, 1976) [Translated into Russian (Moscow: Mir, 1980)]
3. Dotsenko Vik S *Usp. Fiz. Nauk* **165** 481 (1995) [*Phys. Usp.* **38** 457 (1995)]
4. Korshunov S E *Usp. Fiz. Nauk* **176** 233 (2006) [*Phys. Usp.* **49** 225 (2006)]
5. Murtazaev A K *Usp. Fiz. Nauk* **176** 1119 (2006) [*Phys. Usp.* **49** 1092 (2006)]
6. Maleev S V *Usp. Fiz. Nauk* **172** 617 (2002) [*Phys. Usp.* **45** 569 (2002)]
7. Kamilov I K, Murtazaev A K, Aliev Kh K *Usp. Fiz. Nauk* **169** 773 (1999) [*Phys. Usp.* **42** 689 (1999)]
8. Loison D et al. *Pis'ma Zh. Eksp. Teor. Fiz.* **72** 487 (2000) [*JETP Lett.* **72** 337 (2000)]
9. Kawamura H *J. Phys. Soc. Jpn.* **56** 474 (1987)
10. Kawamura H *J. Phys. Soc. Jpn.* **61** 1299 (1992)
11. Mailhot A, Plumer M L, Caille A *Phys. Rev. B* **50** 6854 (1994)
12. Murtazaev A K, Ramazanov M K, Badiev M K *Zh. Eksp. Teor. Fiz.* **132** 1152 (2007) [*JETP* **105** 1011 (2007)]
13. Murtazaev A K, Ramazanov M K *Phys. Rev. B* **76** 174421 (2007)
14. Mitsutake A, Sugita Y, Okamoto Y *Biopolymers* **60** 96 (2001)
15. Svistov L E et al. *Phys. Rev. B* **67** 094434 (2003)
16. Svistov L E et al. *Pis'ma Zh. Eksp. Teor. Fiz.* **80** 231 (2004) [*JETP Lett.* **80** 204 (2004)]
17. Svistov L E et al. *Pis'ma Zh. Eksp. Teor. Fiz.* **81** 133 (2005) [*JETP Lett.* **81** 102 (2005)]
18. Pelissetto A, Rossi P, Vicari E *Phys. Rev. B* **65** 020403 (2001)
19. Peles A, Southern B W *Phys. Rev. B* **67** 184407 (2003)
20. Smirnov A I et al. *Phys. Rev. B* **75** 134412 (2007)
21. Gekht R S *Zh. Eksp. Teor. Fiz.* **102** 1968 (1992) [*JETP* **75** 1058 (1992)]
22. Gekht R S *Usp. Fiz. Nauk* **159** 2 (1989) [*Sov. Phys. Usp.* **32** 871 (1989)]
23. Binder K, Wang J-Sh *J. Stat. Phys.* **55** 87 (1989)
24. Peczak P, Ferrenberg A M, Landau D P *Phys. Rev. B* **43** 6087 (1991)
25. Binder K, Heermann D W *Monte Carlo Simulation in Statistical Physics* (Berlih: Springer-Verlag, 1988) [Translated into Russian (Moscow: Nauka, 1995)]
26. Binder K *Z. Phys. B* **43** 119 (1981)
27. Ferrenberg A M, Landau D P *Phys. Rev. B* **44** 5081 (1991)
28. Ferdinand A E, Fisher M E *Phys. Rev.* **185** 832 (1969)
29. Fisher M E, Barber M N *Phys. Rev. Lett.* **28** 1516 (1972)
30. Landau D P *Physica A* **205** 41 (1994)
31. Loison D *Phys. Lett. A* **257** 83 (1999)
32. Murtazaev A K, Kamilov I K, Magomedov M A *Zh. Eksp. Teor. Fiz.* **120** 1535 (2001) [*JETP* **93** 1330 (2001)]
33. Holm Ch, Janke W *Phys. Rev. B* **48** 936 (1993)

PACS numbers: **42.55.–f**, 42.60.By, **42.65.–k**
DOI: 10.1070/PU2008v051n09ABEH006612

Petawatt lasers based on optical parametric amplifiers: their state and prospects

E A Khazanov, A M Sergeev

1. Introduction

A review of current state-of-the-art femtosecond lasers with the currently record power of the order of 1 PW is presented. Based on an analysis of the advantages and drawbacks of parametric amplification in comparison with laser amplification in a neodymium glass and sapphire crystal, it is shown that the use of parametric amplifiers is a promising approach to overcoming a petawatt barrier. Other concepts concerning multipetawatt lasers, including those based on the unique properties of laser ceramics, are also discussed.

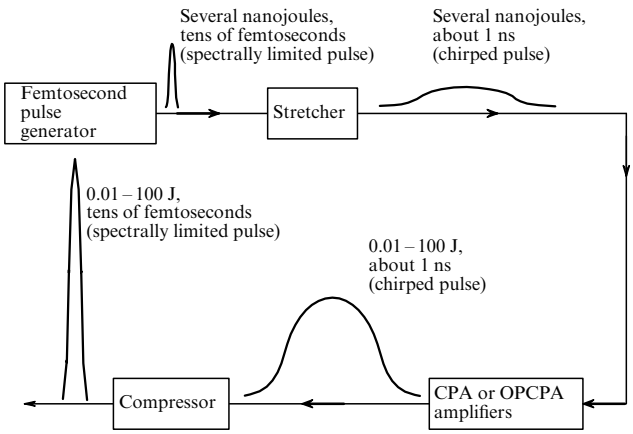

Figure 1. General drawing of powerful femtosecond lasers.

Since the creation of the first laser, one of the main goals of quantum electronics has been an increase in the peak power of laser radiation. The term 'high peak power' is continuously changing, and we are currently speaking of a power about 1 PW (10^{15} W). The key milestone that allowed obtaining such a power was the invention [1] of a fundamental principle, the amplification of chirped (stretched in time, frequency-modulated) pulses, CPA (chirped pulse amplification). The idea (see Fig. 1) is that prior to amplification, a femtosecond pulse is stretched to a duration of approximately 1 ns, which reduces its power and allows amplifying it to high energy without self-focusing and breakdown. Then the pulse is compressed to the initial duration using diffraction gratings with a high breakdown threshold, because light is only reflected from the gratings, not passing inside a material medium. The CPA principle is used without exception in all lasers with the power 1 TW or greater.

Petawatt power was first obtained in 1996 on the basis of CPA in neodymium glass [2]; the pulse duration was 440 fs and the energy was 600 J. The invention of sapphire crystal (corundum with titanium) [3] allowed obtaining considerably shorter pulses and resulted in the creation of a petawatt laser [4] with the much lower pulse energy of 28 J at the duration 33 fs. In Ref. [5], it was suggested to use the parametric amplification (optical parametric chirped pulse amplification, OPCPA) instead of the conventional laser amplification. The first petawatt OPCPA laser was created [6] in 2006 on the basis of a nonlinear DKDP crystal (Deuterated Potassium Dihydrogen Phosphate).

Thus, all existing petawatt lasers and those under development can be divided into three groups by the amplifying medium: (1) neodymium glass [2, 7–14], (2) sapphire (corundum with titanium) [4, 13, 15–17], and (3) parametric amplifiers on KDP (Potassium Dihydrogen Phosphate) and DKDP crystals [6, 18–25] (see Table 1). In all the groups, energy (in the form of population inversion) is stored in neodymium ions in a glass. In the first case, this energy is directly converted to the energy of a chirped pulse, which is then compressed. In the second and third cases, the stored energy is converted into the energy of a narrow-band nanosecond pulse, which is converted into a second harmonic and serves to pump the chirped pulse amplifiers. This pumping either provides the population inversion in a sapphire crystal or decays parametrically into two chirped pulses in a nonlinear crystal.

Table 1. Comparison of petawatt lasers concepts. Symbols '+', '−', and '0' indicate characteristics that are above average, below average, and average, respectively.

Amplifying medium	Nd:glass		Ti:sapphire		DKDP		Cr:YAG-ceramics	
Energy source	Nd:glass		Nd:glass		Nd:glass		Nd:glass	
Pumping	no	(+)	2ω Nd*	(−)	2ω Nd	(−)	1ω Nd**	(0)
Pumping duration, ns	no	(+)	> 10	(0)	1	(−)	> 10	(0)
Amplifier aperture, cm	40	(0)	8	(−)	40	(0)	> 50	(+)
Minimal duration, fs	250	(−)	25	(+)	25	(+)	25	(+)
Efficiency (1ω Nd → fs)***, %	80	(+)	15	(0)	10	(−)	25	(0)
Number of petawatts from 1 kJ 1ω Nd	3.2 (3)****		6 (1.5)****		4		10	
Power obtained, PW	1.36 [2]		0.85 [4]		0.56 [23]		—	

* Second harmonic of a neodymium laser.
** First harmonic of a neodymium laser.
*** From the first-harmonic pulse of a neodymium laser to a femtosecond pulse.
**** Resistance of diffraction gratings and sapphire crystals limit the maximum power at the respective levels of 3 PW and 1.5 PW.

The peak power is determined by the duration and energy of a compressed pulse. The maximal energy is obtained in neodymium glass lasers because the energy stored in the form of population inversion is directly converted into a chirped pulse. However, a narrow-band gain of neodymium glass limits the duration of the compressed pulse to several hundred femtoseconds. As a result, the optical resistance of diffraction gratings hinders extension into the multipetawatt range.

In contrast to neodymium glass lasers, sapphire lasers provide wide-band gain, which allows compressing a pulse down to 10 – 20 fs. But the aperture of sapphire crystals is below 10 cm. In attempting to surpass the petawatt level, so small an aperture would limit the energy of a chirped pulse due to optical breakdown and self-focusing.

2. Advantages and drawbacks of parametric amplification

Parametric amplifiers have none of the drawbacks of sapphire and neodymium glass mentioned above because the aperture of modern nonlinear KDP and DKDP crystals is 40 cm, which is comparable to the dimensions of neodymium glass elements, and the gain width is close to that of sapphire. Moreover, the OPCPA approach has unquestionable advantages compared to CPA.

First, OPCPA provides a very high single-pass gain, up to 10^4, compared to 10 for CPA. Second, in the case of OPCPA, the amplification is directed, which eliminates enhanced spontaneous luminescence and self-oscillation of amplifiers in transverse directions, removing the substantial limitation of CPA lasers. Third, the low level of amplified spontaneous luminescence in the longitudinal direction provides a high temporal contrast of the compressed pulse. Fourth, in the case of OPCPA, in contrast to CPA, the energy difference between the pump and the signal quanta is not released in the crystal in the form of heat because it is withdrawn by an idle wave. This provides low thermal load and, as a consequence, diffraction beam quality even in the pulse-repetition mode. Finally, the spectrum of a chirped pulse is less distorted by gain saturation in the case of OPCPA than for CPA because the effect of the population inversion reduction at the end of the pulse is absent. Hence, the use of parametric amplifiers is rather promising for overcoming the petawatt barrier.

Nevertheless, OPCPA has drawbacks. First of all, there is the requirement of a short (about 1 ns) duration of the pumping pulse, because a parametric amplifier, in contrast to a laser amplifier, cannot acquire energy due to population inversion. Due to the same reason, a high accuracy (of the order of 100 ps) is needed in synchronizing the pumping and chirped pulses. In addition, in the case of OPCPA, it is actually impossible to use several lasers for pumping a single amplifier, which is easily realized in the case of CPA.

It follows that all the advantages of OPCPA are directly related to the amplifier, whereas its drawbacks are related to the pumping laser, where the requirements are higher than for CPA.

3. Choosing the nonlinear crystal for OPCPA

The most promising pumping for powerful parametric amplifiers is the second-harmonic radiation of neodymium glass lasers with the wavelength $\lambda_p = 527$ nm. At this wavelength, the widest gain band is observed for LBO (lithium borate), BBO (barium metaborate), KDP, and DKDP crystals [26, 27]. The first two types of crystals have large nonlinearity; but the modern growing technology is capable of producing such crystals with the transverse dimension of at most several centimeters. Hence, LBO and BBO crystals can only be used in the first cascades of OPCPA. KDP and DKDP crystals with lower nonlinearity can be produced with the dimension that provides the aperture of 40 cm and more, which allows using them in final stages of petawatt OPCPA lasers.

Of key importance for wide-band parametric amplification are the dispersion dependences of the refractive index, which determine the wave-vector mismatch Δk. The mismatch be presented in the form of a Taylor series with respect to the deviation Ω from the central frequency of three-wave synchronism,

$$\Delta k(\Omega) \equiv \Delta k(0) - \left(\frac{\mathrm{d}k_\mathrm{s}}{\mathrm{d}\omega} + \frac{\mathrm{d}k_{\mathrm{i}z}}{\mathrm{d}\omega}\right)\Omega - \frac{1}{2}\left(\frac{\mathrm{d}^2k_\mathrm{s}}{\mathrm{d}\omega^2} + \frac{\mathrm{d}^2k_{\mathrm{i}z}}{\mathrm{d}\omega^2}\right)\Omega^2 - O(\Omega^3)\,,$$

where k_s is the wave vector of the signal wave propagating along the z axis and $k_{\mathrm{i}z}$ is the projection of the idle-wave

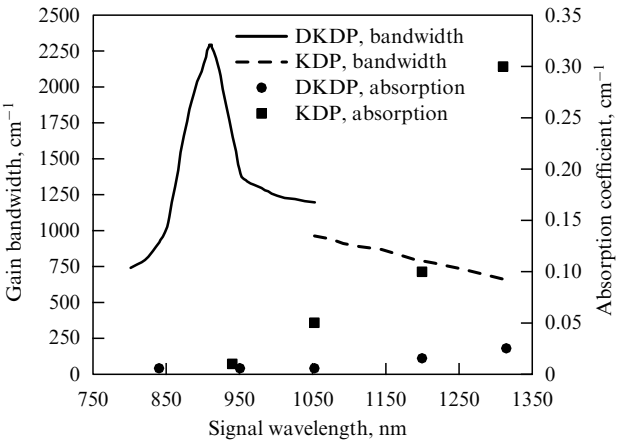

Figure 2. Absorption coefficient for the ordinary wave and the gain bandwidth full width at half maximum at the pumping intensity 1 GW cm^{-2}, wavelength $\lambda_p = 527$ nm, and crystal length 70 mm [27].

vector onto the z axis. Depending on the number of zero terms in the series, we are dealing with phase matching (only the first term is zero), group phase matching (the first two terms are zero), or ultra-wide phase matching (the first three terms are zero). The last case requires the fulfillment of three conditions. At a prescribed wavelength of the pumping radiation λ_p, there are three free parameters: two angles (between the optical axis of the crystal and the wave vectors of pumping and signal radiation) and the signal wavelength λ_s. The analysis in [27] shows that for crystals with $\lambda^* > 2\lambda_p$, there exists a set of three parameters such that the three conditions for ultra-wide synchronism are fulfilled, and for crystals with $\lambda^* < 2\lambda_p$, these three conditions never hold and ultra-wide phase matching is absent. Here, λ^* is the wavelength at which the second derivative of the wavenumber for an ordinary wave vanishes: $d^2k/d\omega^2 = 0$.

At $\lambda^* < 2\lambda_p$, the maximum bandwidth of gain is achieved when the interaction degenerates ($\lambda_s = 2\lambda_p$). To such crystals, we can assign KDP, which was considered the only candidate for high-power OPCPA lasers in [18, 19, 26, 28–31]. Nevertheless, as can be seen in Fig. 2, the maximum band of gain in KDP does not exceed 1000 cm^{-1} and occurs at $\lambda_s = 2\lambda_p = 1054$ nm, i.e., in a range where no lasers exist with the duration 30 fs or less.

In Ref. [32], it was suggested to use DKDP crystals instead of KDP. In Refs [27, 32, 33], reliable dispersion functions were determined for DKDP and the influence of the degree of deuteration was considered. It was also shown that for DKDP, we have $\lambda^* < 2\lambda_p$ and the conditions of ultrawide phase matching hold at $\lambda_s = 910$ nm. In this case, the gain band is twice as wide as that in KDP (see Fig. 2), which allows amplifying pulses with the duration ~ 15 fs. It is important that at both the signal (910 nm) and idler (1250 nm) wavelengths, there are sources of femtosecond pulses with this duration, namely sapphire and cromium–forsterite lasers [34, 35]. In addition, DKDP crystals have a noticeably lower absorption (see Fig. 2).

Thus, the most promising architecture of petawatt OPCPA lasers is the amplification of a chirped pulse with the central wavelength 910 nm in a DKDP crystal. In Section 4, an OPCPA laser with this architecture and the power 0.56 PW is considered [23].

4. 0.56-petawatt OPCPA laser on a DKDP crystal

The general schematic of the laser created at the Institute of Applied Physics (IAP) of the RAS is shown in Fig. 3. As was mentioned in Section 3, a signal wave (sapphire laser, $\lambda_s = 910$ nm) or idler wave (cromium–forsterite laser, $\lambda_s = 1250$ nm) can be injected into a DKDP crystal. The second variant was used in [23], where the master oscillator was a cromium–forsterite laser emitting pulses with the duration 40 fs and energy 3 nJ. Before amplification, the pulses were extended in a stretcher.

Stretching a pulse at one wavelength (idle) and compressing it at another (signal) wavelength requires a nonstandard dispersion characteristic of the stretcher. Calculations show

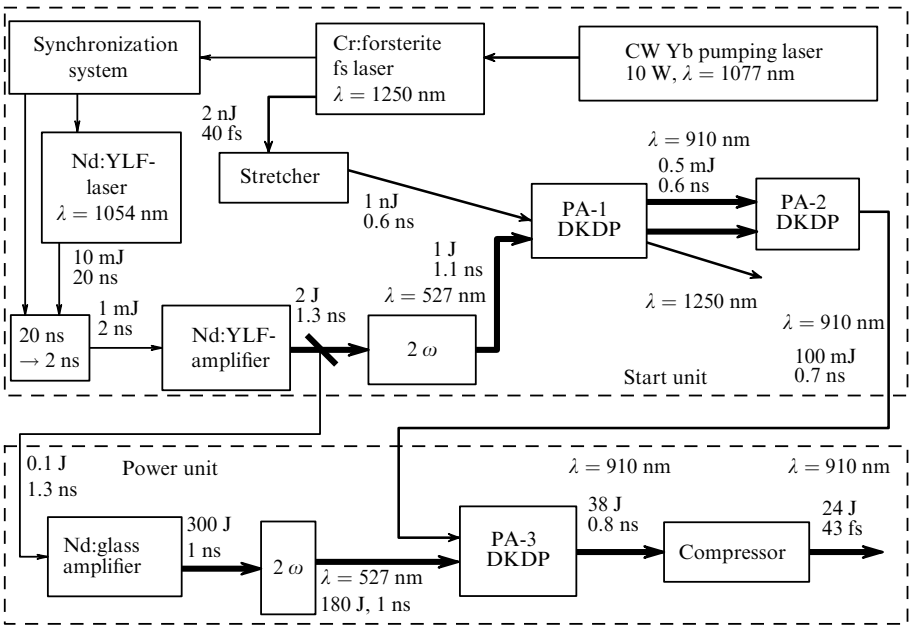

Figure 3. Drawing of an OPCPA laser with the power 0.56 PW [23]. (PA is the parametrical amplifier).

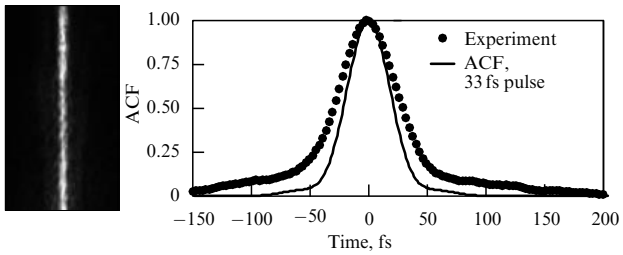

Figure 4. Autocorrelation function for the output pulse (photo and points) and for a Fourier-limited pulse with the duration 33 fs (solid curve) [23].

that such a characteristic is provided by a compressor with two prisms having similar vertex angles [36, 37]. Such a nonstandard stretcher based on a holographic diffraction grating (1200 mm^{-1}) extended a 40 fs pulse to the duration 0.6 ns with the transmission band 1000 cm^{-1}.

Two parametric amplifiers were first pumped by a single-mode Nd:YLF-laser with the energy of the second harmonic ($\lambda_p = 527$ nm) up to 1 J [38], synchronized with a Cr:forsterite laser to an accuracy of 50 ps [39]. The third parametric amplifier was pumped by the second harmonic of a neodymium glass laser with the energy 180 J and pulse duration 1 ns. Such high parameters were obtained due to the following key features of the pumping laser: high-efficiency amplifiers [40]; specific construction of spatial filters [41]; a system for radiation input to the amplifier, which provided the fill factor 0.8 for the output cascade; the use of circular polarization for two output amplifiers in order to suppress small-scale self-focusing [43]; and a frequency doubler with the first-type interaction, which provided a 70% conversion efficiency at the thermo-induced depolarization above 2% [44].

The first parametric amplifier was a two-pass one. On the first pass, it converts pulses with the wavelength 1250 nm into those of 910 nm, and on the second pass, it amplifies radiation at the wavelength 910 nm. The second amplifier was single-pass and had an efficiency $\sim 15\%$, which corresponds to numerical simulation results. The width of the spectrum of the amplified pulse was approximately 30% less than that of the injected signal. Upon further compression, pulses with the duration ~ 80 fs were obtained at the power 0.44 TW [20].

Due to saturation of the third parametric amplifier (with the DKDP crystal length 80 mm and the aperture 120 mm), the spectrum of a chirped pulse broadened, the energy of the pulse reached 38 J, and the amplifier efficiency was above 20%. Two diffraction gratings (1200 mm^{-1}) with the dimensions 24×35 cm were used in a compressor. The maximum energy of compressed pulses was 24 J. The autocorrelation function (see Fig. 4) corresponds to a 43 fs pulse duration full width at half maximum; thus, the peak power was 0.56 PW, which is 35 times greater than the power obtained earlier [19] in OPCPA lasers (see Fig. 5).

Due to the use of OPCPA and a compact pumping neodymium glass laser, the petawatt laser with all infrastructure elements resides in a laboratory with the area less than 80 m^2.

5. Prospects for expanding to the multipetawatt range

As mentioned in Section 4, one of the advantages of OPCPA lasers on DKDP crystals is the simplicity of scaling, which is now limited only by the pumping pulse energy. Four large projects are presently being implemented, which are aimed at obtaining multi-petawatt power for OPCPA lasers.

First of all, there is the Russian project [45] of the Russian Federal Nuclear Center (Sarov) with the participation of IAP RAS. This project directly continues the research in [23]. In addition to the laser, which is similar to that used in Ref. [23], one more parametric amplifier was created on a DKDP crystal with the diameter 200 mm. The system was pumped by one of the channels of the Luch setup [46] (the energy of the second harmonic radiation pulse was 1 kJ and the duration was 2 ns). The master oscillator for the channel of the Luch setup was the specially designed laser, which provided the synchronization of the pump with both a femtosecond laser and a laser that pumped previous cascades of the parametric amplifier [47]. The maximum energy of a chirped pulse after the output cascade of the amplifier was about 100 J [45]. The efficiency of a four-grating compressor was 68%. It is assumed that the work on pulse compressing will be finished in 2008 – 2009 with the output power about 2 PW.

In 2011, it is planned to finish the construction of a 10-petawatt OPCPA laser at the Rutherford Laboratory (Great Britain) [24]. For pumping two final amplifiers, two channels of a Vulcano neodymium glass laser are used with the pulse energy 600 J each. Similarly to [23, 45], ultrawide phase matching is used in a DKDP crystal at the chirped pulse wavelength 910 nm. This project is special in that the chirped pulse is very long (3 ns).

Recently, two large Pan-European laser projects have started up: HiPER (High Power laser Energy Research) [48] and ELI (Extreme Light Infrastructure) [49]. The HiPER project is aimed at investigating laser fusion at a relatively moderate radiation energy that presses a laser target: less than 0.4 MJ for the second harmonic, in contrast to 1.8 MJ for the

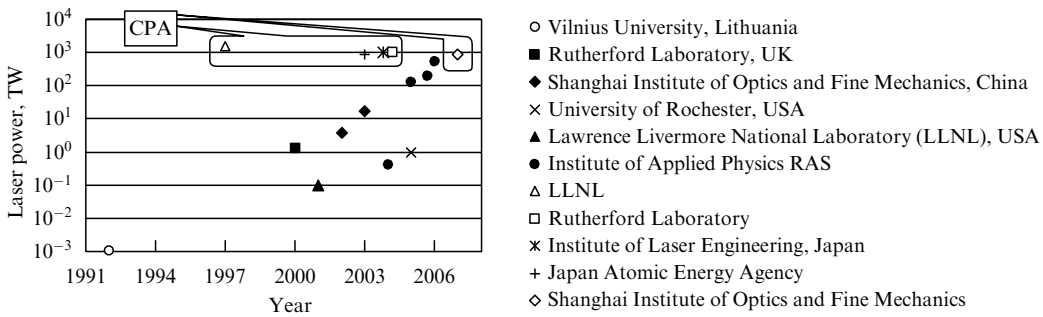

Figure 5. OPCPA lasers and petawatt CPA lasers.

third harmonic using the NIF (National Ignition Facility) setup [50]. Such energy 'saving' is reached due to the use of shorter pulses (of the order of 1 ps) with the energy from 150 to 2000 PW, in addition to nanosecond pulses, for igniting a thermonuclear target. The ELI project is aimed at the creation of a superhigh-power (50 – 1000 PW) femtosecond laser for carrying out unique scientific investigations. In these Pan-European projects, similarly to the project in [45], the architecture of a femtosecond laser used in [23] (parametric amplification of chirped laser pulses with the central wavelength 910 nm in a DKDP crystal) is considered optimal for further scaling.

The OPCPA design is not the only scheme intended for the future creation of multipetawatt and exawatt lasers. It is probable that sapphire crystals will be created with an aperture of 30 – 40 cm, or several types of neodymium glass will be used for expanding the gain spectral width. There is a very interesting concept concerning laser ceramics, a new optical material that combines the advantages of glass and single crystals. Laser ceramics has already made a substantial contribution to lasers with high average power [51]. There are numerous publications on femtosecond low-power ceramic lasers. In high-power lasers, ceramics has not been used in practice yet. However, ceramics-based lasers may compete with neodymium glass lasers, sapphire lasers, and OPCPA lasers.

In particular, a concept was suggested [52] for creating ultrahigh-power femtosecond lasers based on Cr:YAG ceramics, which combines the traditional principles (the energy source is nanosecond pulses of a neodymium glass laser, CPA) and new possibilities opened due to the use of laser ceramics. It can be seen from Table 1 that Cr:YAG ceramics has three key properties: a wide gain band, which provides amplification of pulses with the duration down to 20 fs; a large aperture, which allows amplifying chirped pulses to the multi-kilojoule level; and high conversion efficiency for the narrow-band radiation of a neodymium glass laser. These properties open up the possibility of creating a unique laser with the peak power 100 PW at the pumping energy 10 kJ. Although elements from Cr:YAG ceramics have not yet been used as active elements, they are widely used [53, 54] in passive Q-switches.

In addition to a wide aperture, a very important advantage of ceramics is the possibility of producing active media that cannot be grown as a single crystal. These are, for example, sesquioxides of rare earth elements doped with neodymium and ytterbium: Nd:Y_2O_3 [55], Nd:Lu_2O_3 [56], (Nd,Yb):Sc_2O_3 [57], Yb:Y_2O_3 [58], and so on. In Ref. [59], generation on Yb:Lu_2O_3 and Yb:Sc_2O_3 crystals was obtained with the respective durations 65 and 70 fs. This suggests one more variant for creating a multipetawatt laser: CPA in wide-aperture (Nd,Yb):Lu_2O_3 or (Nd,Yb):Sc_2O_3 ceramics pumped by flash lamps similar to neodymium glass lasers, which exhibit a substantially longer pulse duration. Excitation is transferred from neodymium ions to ytterbium ions, which provides a wide band (direct pumping of ytterbium is only possible by diode lasers, which hinders the possibilities of scaling). Even wider spectral bands can be obtained by using several oxide crystals (Sc_2O_3, Y_2O_3, Lu_2O_3, and so on) simultaneously, similarly to the case of the simultaneous use of different types of neodymium glasses [12, 50] or several garnets with chromium ions [52]. Thus, new petawatt and multipetawatt projects based on CPA in laser ceramics may arise in the immediate future.

6. Conclusion

Petawatt lasers created all over the world will soon become instruments for studying a new branch of knowledge, the physics of extreme light fields [49]. In the future, petawatt lasers may be used as accelerators of charged particles in fundamental investigations and in military, technological, and medical applications. Examples of the last one are isotope facilities for positron-emission tomography and compact, cheap sources of ions for hadronic therapy.

These and other potential applications, along with the noticeable progress in petawatt laser technology, interest commercial companies in expanding to the petawatt range, which accelerates laser technology development. It is hoped that in 5 – 10 years, petawatt lasers (including OPCPA lasers) will no longer be exotic and will become accessible in many laboratories throughout the world.

References

1. Strickland D, Mourou G *Opt. Commun.* **56** 219 (1985)
2. Pennington D M et al. *Proc. SPIE* **3047** 490 (1997)
3. Moulton P F *J. Opt. Soc. Am. B* **3** 125 (1986)
4. Aoyama M et al. *Opt. Lett.* **28** 1594 (2003)
5. Piskarskas A, Stabinis A, Yankauskas A *Usp. Fiz. Nauk* **150** 127 (1986) [*Sov. Phys. Usp.* **29** 869 (1986)]
6. Lozhkarev V et al., Preprint No. 720 (Nizhnii Novgorod: Inst. of Appl. Phys. of the Russ. Acad. of Sci., 2006)
7. Barty C P J et al., in *Proc. Conf. on Lasers and Electro-Optics* (*CLEO*): *San Francisco, Calif., May 17 – 21, 2004* (Washington, DC: Opt. Soc. of Am., 2004) p. JTuG4
8. Waxer L J et al. *Opt. Photon. News* **16** (7) 30 (2005)
9. Kitagawa Y et al. *IEEE J. Quantum Electron.* **40** 281 (2004)
10. Danson C N et al. *Nucl. Fusion* **44** S239 (2004)
11. Blanchot N et al. *Proc. SPIE* **5975** 59750C (2005)
12. Gaul E et al., in *Proc. Advanced Solid-State Photonics, Nara, Japan, January 27 – 30, 2008*, p. MC3
13. Zhu Q et al. *Proc. SPIE* **6823** 682306 (2007)
14. Perry M D et al. *Opt. Lett.* **24** 160 (1999)
15. Collier J L et al., in *Proc. Conf. on Lasers and Electro-Optics* (*CLEO*): *Baltimore, MD, May 22 – 27, 2005* (Washington, DC: Opt. Soc. of Am., 2005) p. JFB1
16. Liang X et al. *Opt. Express* **15** 15335 (2007)
17. Yanovsky V et al. *Opt. Express* **16** 2109 (2008)
18. Ross I N et al. *J. Opt. Soc. Am. B* **19** 2945 (2002)
19. Yang X et al. *Opt. Lett.* **27** 1135 (2002)
20. Andreev N F et al. *Pis'ma Zh. Eksp. Teor. Fiz.* **79** 178 (2004) [*JETP Lett.* **79** 144 (2004)]
21. Lozhkarev V V et al. *Pis'ma Zh. Eksp. Teor. Fiz.* **82** 196 (2005) [*JETP Lett.* **82** 178 (2005)]
22. Lozhkarev V V et al. *Opt. Express* **14** 446 (2006)
23. Lozhkarev V V et al. *Laser Phys. Lett.* **4** 421 (2007)
24. Chekhlov O et al. *Proc. SPIE* **6735** 67350J (2007)
25. Karsch S et al., in *Proc. Advanced Solid-State Photonics, Nara, Japan, January 27 – 30, 2008*, p. WF1
26. Butkus R et al. *Appl. Phys. B* **79** 693 (2004)
27. Lozhkarev V V et al. *Laser Phys.* **15** 1319 (2005)
28. Ross I N et al. *Opt. Commun.* **144** 125 (1997)
29. Matousek P, Rus B, Ross I N *IEEE J. Quantum Electron.* **36** 158 (2000)
30. Ross I N et al. *Appl. Opt.* **39** 2422 (2000)
31. Chekhlov O V et al. *Opt. Lett.* **31** 3665 (2006)
32. Freidman G I et al. *Proc. SPIE* **4630** 135 (2002)
33. Freidman G et al. *Proc. SPIE* **4972** 90 (2003)
34. Yanovsky V et al. *Opt. Lett.* **18** 1541 (1993)
35. Ivanov A A, Alfimov M V, Zheltikov A M *Laser Phys.* **10** 796 (2000)
36. Yakovlev I V et al. *Proc. SPIE* **6614** 661403 (2007)
37. Freidman G I, Yakovlev I V *Kvantovaya Elektron.* **37** 147 (2007) [*Quantum Electron.* **37** 147 (2007)]

38. Potemkin A K et al. *Kvantovaya Elektron*. **35** 302 (2005) [*Quantum Electron*. **35** 302 (2005)]
39. Katin E V, Lozhkarev V V, Palashov O V, Khazanov E A *Kvantovaya Elektron*. **33** 836 (2003) [*Quantum Electron*. **33** 836 (2003)]
40. Poteomkin A K et al. *IEEE J. Quantum Electron*. (to be published)
41. Potemkin A K et al. *Appl. Opt*. **46** 4423 (2007)
42. Martyanov M A, Poteomkin A K, Shaykin A A, Khazanov E A *Kvantovaya Elektron*. **38** 354 (2008) [*Quantum Electron*. **38** 357 (2008)]
43. Vlasov S N, Talanov V I *Samofokusirovka Voln* (Self-focusing of Waves) (Nizhny Novgorod: Inst. Prikladnoi Fiziki RAN, 1997)
44. Khazanov E A et al., in *Proc. Conf. on Lasers and Electro-Optics* (*CLEO*): *San Jose, CA, 2008* (Washington, DC: Opt. Soc. of Am., 2008) p. CThX6
45. Belov I A et al., in *Trudy Mezhdunar. Konf. X Kharitonovskie Tematicheskie Chteniya, 11–14 Marta 2008 g., Sarov* (Proc. of Intern. Conf. X Kharitonov Topical Readings, 11 – 14 March 2008, Sarov) (Sarov: RFYaTs – VNIIEF, 2008) p. 145
46. Garanin S G et al. *Kvantovaya Elektron*. **35** 299 (2005) [*Quantum Electron*. **35** 299 (2005)]
47. Palashov O V, Katin E V, Luchinin G A, Khazanov E A *Appl. Opt*. **47** 3124 (2008)
48. HiPER, http://www.hiper-laser.org/
49. ELI: the Extreme Light Infrastructure european project, http://www.extreme-light-infrastructure.eu/
50. Miller G H, Moses E I, Wuest C R *Nucl. Fusion* **44** S228 (2004)
51. Yamamoto R M et al., in *Proc. Advanced Solid-State Photonics, Nara, Japan, January 27 – 30, 2008*, p. WC5
52. Khazanov E A, Sergeev A M *Laser Phys*. **17** 1398 (2007)
53. Takaichi K et al. *Jpn. J. Appl. Phys*. **41** L96 (2002)
54. Feng Y et al. *Appl. Opt*. **43** 2944 (2004)
55. Lupei A et al. *J. Luminescence* **102 – 103** 72 (2003)
56. Lu J et al. *Appl. Phys. Lett*. **81** 4324 (2002)
57. Lupei V, Lupei A, Ikesue A, in *Proc. Conf. on Lasers and Electro-Optics* (*CLEO*): *San Francisco, Calif., May 17 – 21, 2004* (Washington, DC: Opt. Soc. of Am., 2004) p. CThT55
58. Shirakawa A et al. *Opt. Express* **11** 2911 (2003)
59. Tokurakawa M et al. in *Proc. Advanced Solid-State Photonics, Nara, Japan, January 27 – 30, 2008*, p. WB16