Physics – Uspekhi **50** (12) 1259 – 1282 (2007)

FROM THE HISTORY OF PHYSICS PACS numbers: **01.65.+g**, **28.41–i**, **28.50.–k**

History of the realization of the thorium regime in the Soviet Atomic Project

G V Kiselev, V N Konev

DOI: 10.1070/PU2007v050n12ABEH006155

Contents

Abstract. Archival materials are presented which outline the history of the world's first realization of the thorium regime in the industrial heavy-water reactor OK-180 in the Soviet Union. Computational and experimental results that enter into the treatment of the thorium regime in various versions of the heavy-water nuclear reactors, including homogeneous and gas (helium)-cooled reactors, are briefly discussed. Information on the relevant governmental resolutions and on the basic stages in the research and development work on the OK-180 reactor for operating in the thorium regime is presented. No information on the realization of the thorium regime in the industrial heavy-water reactor OK-180 was published in the past.

G V Kiselev, V N Konev Russian Federation State Scientific Center 'A I Alikhanov Institute for Theoretical and Experimental Physics', ul. B. Cheremushkinskaya 25, 119218 Moscow, Russian Federation
Tel./Fax (7-495) 127 05 43
E-mail: kiselev@itep.ru, konev@itep.ru

Received 21 June 2006, revised 10 August 2007
Uspekhi Fizicheskikh Nauk **177** (12) 1361 – 1384 (2007)
DOI: 10.3367/UFNr.0177.200712i.1361
Translated by V Kisin; edited by A Radzig

1. Introduction

In the 50 years that humankind has been in possession of atomic energy, specialists both in Russia and abroad have never lost sight of the thorium nuclear fuel cycle as a backup option for the time when deposits of cheap uranium have been exhausted. The results of research done by Laboratory No. 3 at the initial stages of the Soviet Atomic Project served as a basis for implementing the thorium regime in the heavy-water reactor No. 7 (OK-180 in *Russ. abbr.*) of enterprise No. 817 (currently PO 'Mayak' in *Russ. abbr.*) in the mid-1950s under the scientific supervision of Academician A I Alikhanov; this was another 'first' in the world atomic reactor industry. However, no information about the work on the thorium regime in the USSR has so far been published in the open press. This article offers to the reader a review of the main results of analysis of archive materials on thorium regime research in heavy-water reactors of various types and on practical implementation of this regime in the heavy-water reactor No. 7.

The article includes quotations from archive documents in which obsolete code words of those times were used, namely: 'active material' for 'nuclear fuel'; A-9, tin — uranium; selenium-77, AP-3 — uranium-233; A-94 — uranium-234; A-95, tin-125 — uranium-235; Z, tellurium-120 — plutonium; selenium, B-9 — thorium; zero points — thermal neutrons;

dew — fission products; coolant, condensate, hydroxyline, product 180 — heavy water; DK — deuteron (heavy-water) pile (reactor); TK — thorium pile (reactor); increment — breeding, and, finally, slug — working block (fuel element in today's use). However, to facilitate understanding we replaced some code words with terms in standard usage now.

2. Physical peculiarities of the thorium regime of a nuclear reactor

It will be useful to remind the reader of a number of physical peculiarities of using thorium in nuclear reactors, in comparison with operating conditions of currently employed power reactors with uranium fuel. The main difference lies in thorium (Th-232) being a fertile element whose irradiation with the neutron flux of a nuclear reactor generates a new fissile element — uranium-233. Using this uranium-233 as the nuclear fuel is a means to organize extended reproduction, known as breeding, something that cannot be achieved in the case of uranium-235. Only plutonium used as nuclear fuel in fast neutron reactors makes it possible to implement breeding with a breeding ratio above unity.

Uranium-233 breeding in thermal neutron reactors is based on its neutron-physics characteristics. As a thermal neutron is absorbed by the nucleus of uranium-233, the relative probability of its fission is much higher than that of radiative capture of this neutron. Consequently, uranium-233 is the most promising material for nuclear fuel breeding in thermal reactors and intermediate neutron reactors that use the relatively abundant element thorium as the primary product. The uranium-233 produced in thorium decays also has advantageous nuclear characteristics: a favorable ratio of fission to capture cross sections, the highest neutron yield η per absorption event (compared with uranium-235 and plutonium). Its value of ν, viz. the yield of neutrons per fission event, is also higher than in uranium-235. Uranium-233 has a higher neutron potential, which makes it possible to use neutrons more efficiently. All this implies the following potentialities:

(1) reduced critical mass, i.e., reduced fuel charge;

(2) increased conversion coefficient and realization of nuclear fuel breeding;

(3) increased fuel lifetime;

(4) reduction in the amount of long-lived minor actinides in comparison with the uranium-235–uranium-238 fuel cycle.

Thermal neutron systems using the thorium fuel cycle make it possible to raise the specific power to 1 MW(el.) kg^{-1} of the fissile material, which is two to four times greater than the specific power of fast neutron reactors.

Even partial application of thorium in the existing power reactors permits the improvement of their characteristics. We know that thorium-232 absorbs thermal neutrons somewhat more strongly than uranium-238. Consequently, thorium may be used as an addition to absorb excess neutrons at the beginning of a campaign and to achieve flattening of the neutron flux in the reactor core. In contrast to the 'burning out additions' used for these purposes (rare-earth elements added to fuel composition in fuel assemblies) that unfavorably affect the neutron balance, the neutron-absorbing thorium addition possesses so-called fertility, i.e., the ability to generate new fissile material (thorium-232 itself suffers practically no fission under irradiation by thermal neutrons). As uranium-233 is built up in the reactor, thorium gradually transforms from an absorbing addition to an active material. The nuclei of uranium-233 get involved in the general process and add to the thermal energy released in the reactor core. Of course, for each value of the neutron flux at a given coordinate in the core and for each spectral (energy) distribution of neutrons there exists a specific value of equilibrium concentration of the generated uranium-233 that next undergoes fission.

Why is it that this principle of controlling the reactivity of the nuclear reactor at the start of a campaign does not work for uranium – plutonium systems? For the generated plutonium the value of α, the ratio of parasitic radiative capture cross section to fission cross section, is too high. As a result of the high value of α for plutonium, the reactivity of this reactor falls off rather rapidly. The low value of α for uranium-233 maintains the reactivity at an optimum level for much longer.

The above-outlined nuclear-physical properties of uranium-233 permit the development of new types of power-generating reactors, namely:

(1) converters designed for burning up the uranium-233 generated in the course of reactor operation and for exceptionally long campaigns (about 10 years between refuellings);

(2) converters for reuse of the uranium-233 generated with a very high conversion coefficient and ordinary-water-based breeding cycle.

In view of this, and taking into account the inevitable exhaustion of uranium fuel resources, we need to note that the thorium regime constitutes a promising fuel cycle for atomic power engineering.

3. Conceptual approaches to the thorium problem at the time of the Atomic Project

I V Kurchatov, who was officially designated by the USSR Government in 1943 as science supervisor of the uranium project, and subsequently became scientific leader of the entire Soviet Atomic Project, formulated two first-priority problems for the production of nuclear materials — plutonium and uranium-235 — for the first atomic bomb. Simultaneously, production of uranium-233 was assigned the status of backup activity.

On 5, 6, 10, 16, and 24 September 1945 a meeting of the Technical Council of the Special Committee took place, which discussed the problem entitled "The state of research, development, and practical work at Laboratory No. 2 in the field of utilization of intranuclear energy"; reports were presented by the leading scientists. On 5 September 1945, the meeting heard a report by I V Kurchatov and his closest coworker G N Flerov and an accompanying report by A I Alikhanov (who at the time was on the staff of Laboratory No. 2); the topic was "The current status of research and practical developments at Laboratory No. 2 in the field of producing plutonium-239 in uranium – graphite and uranium – heavy-water piles." In item 6 of the meeting's decision, the Council formulated the task of "studying chemical compounds, and the physical and nuclear properties of uranium-235, uranium-233, plutonium and thorium," while the concluding part of the protocol [1] demanded:

"After constructing and placing the uranium – graphite piles, diffusion plant and uranium – heavy-water reactor in operation, begin using the following methods:

(a) 'uranium – plutonium – light-water' pile (producing dirty plutonium) $\langle\ldots\rangle$;

(b) 'uranium – heavy-water' pile in combination with uranium and light water $\langle\ldots\rangle$;

(c) 'thorium – plutonium – light-water' pile to reprocess thorium to uranium-233."

This decision of the Technical Council served as a basis for starting extensive work on the thorium cycle; numerous documents indicate that the main goal at the initial stage was to produce the maximum possible amount of uranium-233 as a nuclear explosive.

With time, however, as they learnt more about the problem, Soviet researchers perceived a realistic possibility, in principle, of uranium-233 breeding and of using it as nuclear fuel for the heat production. The documents quoted below clearly show that the idea was born of dual-purpose utilization of nuclear reactors in the thorium regime — for electric power production and for the accompanying manufacture of uranium-233. Simultaneously, important advantages were demonstrated of thorium reactors with intermediate neutron spectrum, as they make it possible to increase the breeding ratio of the new nuclear fuel. The research, design, and construction work on mastering the thorium regime for manufacturing uranium-233 were carried on for a long period (about 10 years) as an important state program. It was in Laboratory No. 3 that the most important peculiarities involved in the thorium regime were established experimentally:

— the absence of such dangerous long-lived fuel components as plutonium, americium, and curium isotopes that get produced in the uranium – plutonium cycle;

— reduced content of uranium-233 fission products that strongly absorb neutrons, e.g., xenon-135;

— the possibility of uranium-233 breeding as nuclear fuel with a breeding ratio close to unity, and some others.

In order to give the reader an introduction to the problem and to help understand its development tendencies as the research into thorium progressed, we quote here several documents left by our great contemporaries.

In his report to Soviet leader I V Stalin on 12 February 1946, I V Kurchatov indicated that the work on the production of plutonium was proceeding in the uranium – graphite and heavy-water reactors and on the production of uranium-235 using various methods and that he "had developed two versions of the program of extending practical work for 1947 and subsequent years" [2]. The second version provided, in addition to the construction of new industrial-scale reactors, for creating one plutonium + thorium + light-water pile (by 1 June 1949). In fact, this pile was never built.

I V Kurchatov's report of February 1948 on the main research, design, and implementation work in connection with atomic energy, completed in 1947, is very indicative of the characteristics of various types of nuclear reactors; the main task of the program was to obtain the maximum possible amount of plutonium for atomic bomb production. Having compared four methods, he pointed out the following [3]:

"We find that fuel use in the uranium – graphite reactor is not as good as in the diffusion and electromagnetic methods or in the uranium – heavy-water reactor.

Although heavy-water reactors possess several significant drawbacks, they have important advantages in comparison with other methods because, as far as we can conclude from the data available to us, they allow using thorium as well.

It would therefore be wrong to pursue only one uranium – graphite reactor option."

The first report to L P Beria (Chairman of the Special Committee — *Ed. note*) on the use of thorium was signed on 27 October 1948 by I V Kurchatov, A I Alikhanov, and A P Aleksandrov (the text was probably underlined by Beria — *G.V.K, V.N.K.*) [4]:

"In accordance with your assignment, please receive our considerations in connection with the use of thorium and on thorium requirements for the years 1949, 1950 and 1951.

In contrast to uranium, natural thorium has a single isotope with mass number 232, whose nuclear properties are similar to uranium-238. ⟨...⟩ On irradiation of thorium by neutrons it is partly converted to fissile uranium-233 after two radioactive transitions; by its properties, uranium-233 is similar to uranium-235 and plutonium.

It becomes possible therefore to use thorium as a secondary nuclear material alongside uranium by proceeding in the following two ways:

(1) by irradiating thorium with neutrons in atomic reactors until 1/70th of its amount transforms to uranium-233;

(2) by adding to natural thorium pure active uranium-235 and plutonium (approximately 1/70 of the amount of thorium).

As is well known, the calculations show that in certain atomic reactors with thorium that contains uranium-233 in necessary concentrations, a chain nuclear reaction is not only sustained but also results in increasing the total content of the active uranium-233 in comparison with the initial content. This breeding of the active material is obtained, according to calculations conducted in Laboratory No. 3, both in the deuteron and the graphite reactors. Fission of one kilogram of uranium-233 in the deuteron reactor leads to obtaining of 1.2 – 1.25 kilogram of new uranium-233, while fissioning of one kilogram of uranium-233 in a graphite reactor produces 1.15 – 1.17 kilogram of new uranium-233.

In view of this feature of thorium systems, it becomes theoretically possible for the ideal process in a thermal nuclear reactor to achieve the transformation of the entire thorium amount and obtain from it 15 – 20% of its entire mass as active uranium-233.

⟨...⟩

As we see from the above, thorium can only be utilized if we have operating industrial-scale nuclear reactors or a diffusion plant, as well as stocked fissile materials — uranium-233, plutonium and uranium-235.

To ensure operation of one thorium reactor it is necessary (in the case of a heavy-water rector) to have at least 25 – 30 kilograms of pure fissile material, and in the case of a graphite reactor — at least 100 kilograms of active material. This shows that wide-scale use of thorium in nuclear reactors is only possible with a well-developed atomic industry capable of extracting sufficiently large amounts of valuable fissile materials for thorium reactors."

Clearly, this report was of explanatory nature. Scientists explained to their 'boss' (i.e., Beria, who later would have to make decisions at the governmental level), using comprehensible terms, the specific features of the thorium regime and how to obtain uranium-233, and that any "wide-scale use of thorium in nuclear reactors is only possible with a well-developed atomic industry" capable of extracting a required amount of enriched uranium for uranium-233 recovery. The report also pointed to the importance of reducing losses in the radiochemical processing of irradiated thorium slugs.

4. Chronicle of the main events

Laboratory No. 3, given the new title Thermotechnical Laboratory (TTL) in 1953 and nowadays known as the RF

State Scientific Center 'A I Alikhanov ITEP', exercised the scientific leadership of the heavy-water field in the reactor construction in the USSR, and also in the thorium nuclear fuel cycle (NFC) at the initial stage of the work on the Atomic Project.

The Technical Council of the Special Committee heard at its session on 8 October 1945 (protocol No. 3) a report by P Ya Meshik, Deputy Chief of the First Main Directorate, entitled "On the organization of USSR Academy of Sciences Laboratory No. 3, and its tasks"[5]. The decision of the Council contains this:

"1. It shall be necessary to establish USSR Academy of Sciences Laboratory No. 3 headed by Academician Alikhanov; charge the laboratory with responsibility for accomplishing the following tasks:

(a) physics research, design and implementation of a 'uranium – heavy-water' reactor;

(b) physics research of the thorium – light-water, thorium – plutonium – light-water systems for uranium-233 breeding."

On the basis of this decision of the Technical Council, which was discussed by the Special Committee, Beria in his capacity as Vice Chairman of the Council of People's Commissars (CPC or SNK in *Russ. abbr.*) signed on 1 December 1945 the Resolution No. 3010-895ts of the USSR CPC on the organization of USSR Academy of Sciences Laboratory No. 3 [6]. It was rich in details, containing 30 items with assignments to various state bodies. Some quotes from this resolution are given below:

"USSR Council of People's Commissars hereby ORDERS:

1. To organize Laboratory No. 3 within the USSR Academy of Sciences and assign to it the following responsibilities:

(a) physics research of the systems 'DK' and 'TK', of the properties of beta radioactivity and nuclear particles;

(b) preparation of measures on the practical implementation of the above-listed research projects."

The structure of Laboratory No. 3 as prescribed by the governmental resolution included the following sectors covering reactor themes: DK system sector, TK system sector. (DK stands for the deuteron pile (reactor), and TK for the thorium pile (reactor). — *G.V.K, V.N.K.*)

Given below is the chronologically arranged list of the main stages of these activities involving the thorium regime:

1946 – 1949 — development, construction, and putting in operation of the research heavy-water reactor (facility No. 7) at the Laboratory No. 3 (26 April 1949);

1947 – 1951 — development, construction, and putting in operation (17 October 1951) of the first industrial heavy-water reactor No. 7 (OK-180) at the enterprise No. 817;

1948 – 1955 — carrying out the computational, experimental and design works at Laboratory No. 3, research institutes, and design bureaus to complete feasibility studies for thorium regimes in various types of heavy-water nuclear reactors;

1949 – 1955 — carrying out research work aimed at justification of the plutonium and thorium regimes of industrial heavy-water reactors No. 7 (OK-180) and No. 7A (OK-190) at the enterprise No. 817, including experiments conducted at the facility No. 7;

1 August 1953 — the reactor OK-180 was changed over to operating in the thorium regime;

1949 – 1955 — development, construction and putting in operation (27 December 1955) of the second industrial heavy-water reactor No. 7A (OK-190) at the enterprise No. 817;

1948 – 1955 — development of the KS type heavy-water reactor with a helium (later carbon-dioxide) coolant; putting into commission the KS-150 power reactor in Czechoslovakia in 1972; the thorium regime was considered as one of the possible scenarios;

1955 – 1966 — development, construction, and putting into operation (April 1966) the industrial heavy-water reactor OK-190M at the enterprise No. 817, with the thorium regime considered as one of the possible scenarios;

1966 – 1987 — development, construction, and putting into operation (30 December 1987) the industrial isotope-production heavy-water reactor LF-2 at the PO 'Mayak'. Of the above-listed heavy-water reactors only the LF-2 reactor is currently in operation.

5. Joint discussions of the thorium problem within the FMD Scientific and Technical Council

At the time of the Atomic Project, procedures were in place that required practically every scientific or technological aspect to be discussed first at the meetings of the Technical Council and Engineering – Technical Council (ETC) within the Special Committee and ETC sections, later transformed into the Scientific – Technical Council (STC or NTS in *Russ. abbr.*) within the First Main Directorate (FMD or PGU in *Russ. abbr.*), and their decisions were binding on the entire organization. Moreover, recommendations formulated by scientists at the time of the Atomic Project were not only heard out; in fact, the top leadership of the country actively assisted in the implementation of these recommendations.

We already mentioned two meetings of the scientific and technical councils [1, 5]. In this section we briefly outline information on the treatment of a number of aspects of the thorium problem at meetings of the NTS and Section No. 1 of the NTS in the period 1946 – 1952; we make use of the memorandum composed by E P Anan'ev, the Learned Secretary of NTS Section No. 1 [7]:

NTS 29.04.1946 (protocol No. 5) obligated Kurchatov I V and Zavenyagin A P to evaluate the anticipated requirements for thorium in various scenarios of work on the project.

NTS 6.05.1946 (protocol No. 6) largely approved the evaluation of thorium requirements as suggested by Kurchatov I V. By 1950 these requirements were predicted in the amount of 50 t of metal and 150 t of oxide.

NTS 9.08.1946 (protocol No. 36) considered the issue of organization of thorium production on the basis of the available deposits of monacite (500 – 800 t) and obligated Alikhanov A I to prepare specifications on thorium and thorium oxide.

NTS 20.1.47 (protocol No. 57) approved the program of work on thorium as presented by Cde. Alikhanov A I, which included:

(a) conducting in 1947 – 1949 a survey study of thorium for measuring its physical constants and for implementation of the heavy-water facility;

(b) conducting in 1947 engineering and technical surveys for the design and construction of thorium-using units;

(c) utilizing in 1947 (in unit No. 1) 850 kg of pure material and 500 kg of carbonates or oxide (the possible daily yield of uranium-233 — 0.4 g), and in 1948 in units No. 2 and No. 3 —

2.5 t of pure material and 2.5 t of carbonate (the possible daily yield of uranium-233 — 4 g).

NTS 7.06.48 (protocol No. 118) considered and largely approved the draft resolution on the plan of the works on thorium for 1949 – 1951. The draft resolution suggested creation of capacities for annual producing thorium metal and thorium salts in the amount of 130 t.

NTS 20.12.48 (protocol No. 136) discussed the status of scientific research on thorium at the Thermotechnical Laboratory, Giredmet, IONKh, IFKh, the Karpov Institute, NII-9, and RIAN, and approved the plans of works on thorium, foreseeing scientific and experimental preparation for building reactors capable of fissile material breeding.

NTS 3.07.50 (protocol No. K-I5) considered the requirements for thorium for the subsequent five years (1950 – 1954) as 40 t for the reactors A, AV, AV-1, and No. 7.

NTS 27.10.52 (protocol No. M-8) considered a report prepared by the Thermotechnical Laboratory on research completed in 1950 – 1952, including its work on the thorium problem. The relevant NTS resolution said this:

"First macroscopic amounts of uranium-233 from irradiated thorium were obtained in 1950. It was found that one ton of thorium contains about 4 grams of uranium instead of 1 g per ton as stipulated in technical task orders. The NII-9 developed the technology for separating uranium-233. In two years, facility No. 5 extracted about 150 g of uranium-233 from thorium irradiated in reactor 'A' (extraction factor amounted to 98%). An industrial shop is being designed for thorium separation.

The type of thorium slugs has been developed.

Physical constants of thorium and uranium-233 were measured and the amount of uranium-233 fission products was found, and radiative capture cross section of thermal neutrons by uranium-233 was determined. Computational procedure employed in designing a uranium-233 breeder was developed."

NTS confirmed the need to expand the work conducted at the Thermotechnical Laboratory on the application of heavy-water reactors with uranium-233. A I Alikhanov was obligated to submit to the First Main Directorate his proposals on speeding up the design and research efforts in connection with preparations for changing over the reactor No. 7 to uranium-233 breeding mode and with designing the reactor No. 7A.

NTS Section No. 1 6.06.52 (protocol No. S1-89) discussed and approved measures taken in connection with changing over the reactor No. 7 to the production of uranium-233.

The above memorandum shows the high intensity of discussions concerning various scientific, technological, and administrative issues at the meetings of the PGU NTS and NTS Section No. 1. Furthermore, a number of projects of heavy-water reactors were under discussion at the time, in which thorium served as a fertile material for producing uranium-233; information on these is given below. After 1953, the thorium regime was also discussed as an option for various power reactor designs proposed by Laboratory No. 3.

6. Main scientific and engineering problems involved in the thorium regime

In order to better understand the chain of events connected with mastering the thorium regime, we shall list the principal scientific and technical problems that experts in Laboratory No. 3 and other research institutes had to solve.

(1) Variants of physical calculations for different types of heavy-water reactors, aimed at determining their basic characteristics, including the breeding ratio. The following varieties of heavy-water reactors were considered:

— industrial $D_2O - D_2O$ thermal neutron reactors of the No. 7 and No. 7A types (i.e., using D_2O as a moderator and coolant) with or without a neutron reflector, with various types of nuclear fuel and thorium as fertile material:

- natural uranium as nuclear fuel and thorium;
- natural uranium, thorium, and uranium-233;
- enriched (2% and 75%) uranium as nuclear fuel and thorium;
- uranium-233 and thorium;
- pure uranium-233;

— power D_2O thermal neutron reactor with helium coolant, natural uranium as nuclear fuel and thorium as fertile material;

— homogeneous power D_2O reactor with uranium oxide and thorium in the form of suspension;

— power $D_2O - D_2O$ intermediate neutron reactor with uranium-233 and thorium.

(2) Determination of the nuclear constants of thorium and uranium-233.

(3) Investigation of the physical – chemical properties of thorium and uranium-233.

(4) Investigation of corrosion resistance of thorium and its compounds (alloys).

(5) Technological work:

— improvement of the technology for producing heavy water and methods of its analysis; investigation of processes of formation of detonating mixture and methods for its burning;

— selection of fuel compositions, fertile and construction materials, formulation of technical requirements for them and for manufacturing technologies;

— investigation of reliability of nuclear fuel and protective coatings under irradiation;

— formulation of technical requirements and development of techniques for radiochemical reprocessing of irradiated thorium and for extraction of uranium-233;

— benchmark testing of reactor equipment (technological channels, heat exchanger model, circulation pumps, etc.);

— preparation of technical task orders for the development of the above-listed reactors.

Browsing through these assignments provides evidence of the comprehensive approach of Laboratory No. 3 to the problem of the thorium cycle.

7. Main organizational decisions

On 13 May 1946, the PGU NTS heard A I Alikhanov's report "Work on units of the No. 2 type", in which he gave arguments in favor of building the industrial heavy-water reactors for the production of weapons-grade plutonium [8]. ("Unit of the No. 2 type" stands for heavy-water reactor — *G.V.K, V.N.K.*) The report noted: "The advantage of heavy water lies in it slowing down neutrons more efficiently (i.e., it reduces the amount of the necessary moderator), plus the moderated neutrons undergo useless absorption less frequently than in graphite. For these reasons, the dimensions of a DK are considerably smaller than those of a graphite pile." A I Alikhanov analyzed the following versions of heavy-water reactors:

"(1) cooled with light water" (Alikhanov remarks that in this version the heavy-water reactor has properties very similar to those of the uranium – graphite reactor);

(2) cooled with heavy water;

(3) with boiling heavy water used as a coolant;

(4) use of 'slurry pile' with uranium dioxide as suspension dissolved in heavy water;

(5) use of uranium hexafluoride as nuclear fuel."

Alikhanov suggested to first of all develop an industrial reactor with heavy-water cooling and loaded with thorium in the peripheral zone of the reactor core. He was of the opinion that using a thorium screen to capture leakage neutrons (making up 14% of the total number of neutrons in the reactor) would make it possible to implement the principle of breeding the nuclear fuel in a thermal reactor. At the time, this was a revolutionary idea. Alikhanov's report provided the basis for later making a decision on changing over the industrial heavy-water reactor No. 7 to the thorium regime.

On 30 September 1947, the USSR Council of Ministers (USSR CM) approved Resolution No. 3430-1125ts/sd (hereinafter 'ts' stands for 'top secret', and 'sd' for 'special dossier' — *Ed. note*) where items 4 – 6 read [9]:

"4. Laboratory No. 3 of the USSR Academy of Sciences (Cde. Alikhanov), the Ministry of Heavy Engineering Industry (Cde. Kazakov) that enlists TsKTI in a cause, and OKB 'Hydropress' are obliged to start designing unit No. 7.

5. The responsibility for the general design (technical and working projects) for the construction of facility No. 7 at Laboratory No. 3 of the USSR Academy of Sciences and of unit No. 7 is laid on GSPI-11 of the First Main Directorate of the USSR Council of Ministers (Cde. Gutov).

Academician Alikhanov is charged with responsibility for the scientific supervision at the design stage.

6. The First Main Directorate of the USSR Council of Ministers (Cde. Vannikov), Ministry of Heavy Engineering Industry (Cde. Kazakov), Laboratory No. 3 of the USSR Academy of Sciences (Cde. Alikhanov), GSPI-11 (Cde. Gutov), OKB 'Gidropress' (Cde. Sholkovich), TsKTI (Cde. Shubenko-Shubin) are obliged to develop and submit to the USSR Council of Ministers by 1 January 1948 design task orders to the construction of unit No. 7.

Cdes. Vannikov, Pervukhin, Kurchatov, Alikhanov, and Borisov are obliged to submit by the deadline indicated their proposals concerning the location and terms of construction for this unit."

On 6 April 1948, the USSR CM approved the "Plan of special research work for 1948" and "Plan of new special research and design works for 1948"[10]. The "Plan of new special works" included the measures on promoting design and experimental works on the thorium problem:

"1. Develop technical task orders for a system of gas cooling and accomplish the design tasks during the 4th quarter of 1948.

2. Conduct thermal calculations and accomplish the design tasks for the research reactor operating with pure uranium-233.

3. Carry out calculations for mixed systems with enriched uranium and uranium-233 for the industrial reactor No. 7.

4. Carry out calculations for systems with thorium, uranium and uranium-233.

5. Develop the process of obtaining pure thorium with minimum impurity content and the neutron poisoning coefficient of 0.5 – 0.7.

6. Conduct experimental work on measuring nuclear constants of thorium and uranium-233.

7. Study the corrosion behavior of thorium, its alloys and construction materials under irradiation."

The FMD report on meeting the plan targets of research and development for 1948 indicated [11]:

"In Laboratory No. 3, physical calculations were done of a unit with thorium, for the options of helium and heavy-water cooling. On the task orders of Laboratory No. 3, the option of a helium-cooled unit with added thorium was analyzed in the GSPI-11 (Cde. Khristenko)."

Initially NTS Section No. 1 and later PGU NTS heard on 24 May 1948 reports by Alikhanov A I, Shubenko-Shubin L A (TsKTI), and Kondratsky N N (GSPI-11) on the design task orders for reactor No. 7 developed in accordance with the technical task orders of Laboratory No. 3 [12]. NTS approved the proposals of the science supervisor, Academician Alikhanov, and adopted the design task orders as the basis for further designing and for detailing of the technical project for reactor No. 7; it recommended that the science supervisor foresee maximum possible thorium charging.

On 9 August 1948, PGU NTS discussed Alikhanov's report on the construction of heavy-water facilities, in which he presented the results of calculations at Laboratory No. 3 for the plutonium and thorium regimes of reactor No. 7 [13]. NTS confirmed the need to build a reactor for plutonium production. However, I V Kurchatov requested that the NTS learned secretary B S Pozdnyakov refrain from approving the NTS protocol with the FMD top administration before this situation was discussed with the staff of enterprise No. 817 in September 1948. As a result, this protocol was never approved. It appears that the NTS protocol No. 125 was the only one in the history of this body that escaped approval by its top echelon.

This complication forced Alikhanov to resubmit the proposal "On the selection of the building site and characteristics of facility No. 7" [14, 15] to PGU NTS Section No. 1 on 15 November 1948. He said that "reactor No. 7 with heavy water for a moderator and coolant is meant for plutonium production from uranium with a yield of 100 g per day and production of uranium-233 from thorium up to 10 g per day. The charging of natural uranium was 35 t, that of thorium — 3 t, the diameter and length of uranium slugs — 22 and 75 mm, respectively. Working slugs were cooled about a closed circuit by a volume of 25 t of heavy water. The introduction of a closed first heat-transfer circuit and intermediate heat-transfer circuit was a novel technical solution in reactor technology in comparison with the first industrial uranium – graphite reactors, as it became possible to exclude radioactive water disposal into a natural reservoir."

The decision signed by chairman of NTS Section No. 1 M G Pervukhin was [15]:

"Accept the proposal of Laboratory No. 3 (Alikhanov A I), GSPI-11 (Smirnov V V) and enterprise No. 817 (Muzrukov B G) concerning the building of unit No. 7 on the territory of enterprise No. 817; its power is approved to be 100 arbitrary units and daily yield 85 units." (100 arb. units = 100 MW, and 85 units = 85 g — *G.V.K, V.N.K.*)

A very serious obstacle arose, however, in the form of an objection from I V Kurchatov, the science supervisor of the Atomic Project, against the construction of an industrial heavy-water reactor. On 4 November 1948, Kurchatov sent Beria the following letter [16]:

"In accordance with your instruction I, together with Cde. Alikhanov A I and Cde. Aleksandrov A P, considered the matter of heavy-water reactors. It became clear that no rational solution can be finalized without considering further development of the work on the problem as a whole. ⟨...⟩

The commissioning in 1948 of reactor 'A' and the first months of its operations showed that plutonium production using the uranium – graphite reactor proved to be well-founded."

Then Kurchatov gave his consideration concerning the characteristics of the reactor 'A', and on this basis put forward the following arguments:

"...There is reason to believe that the problem of plutonium production should be solved by using uranium – graphite piles and further construction of such units needs additional boosting. ⟨...⟩

Until now heavy-water reactors have been developed for plutonium production. This has been necessary because of the need to have a backup plutonium production method (more reliable as follows from its physical characteristics) other than that employed in the uranium – graphite reactor. The need for heavy-water reactor development in this area is not pressing any more.

It would be possible to work on heavy-water reactors and graphite reactors, but in fact there is no real need for that. Heavy-water reactors have an advantage over uranium – graphite reactors, namely, they allow more efficient utilization of uranium-235 (not to the extent, however, that would permit avoiding the use of the diffusion method in combination) but at the same time, heavy-water reactors demand incomparably higher quality of manufacturing. ⟨...⟩ Consequently, the development of the heavy-water reactor must be directed so as to solve the thorium problem, in which case, as follows from the current stage of the research program, heavy-water reactors have advantages in comparison with uranium – graphite reactors.

According to the calculations of Lab[oratory] No. 3, a thorium reactor (charged with a mixture of thorium and uranium-233) using heavy water as the moderator would require only 23 – 25 kilograms of uranium-233, while the choice of graphite as the moderator would require 100 – 120 kilograms of uranium-233.

The breeding ratio of the fissile material in heavy-water thorium reactors is higher, reaching 1.20 – 1.25 instead of 1.15 – 1.17 for reactors with graphite as the moderator.

The project of an industrial heavy-water reactor with a power of 120,000 kW, developed by Laboratory No. 3 and GSPI-11, uses the flow of heavy water to cool the uranium slugs. The design of the apparatus makes it possible to use it both for plutonium production and, at a later stage, for the production of uranium-233 from the mixture of thorium and uranium-233. In the former case it can produce up to 100 grams of plutonium per day, and in the latter — up to 20 grams of uranium-233. This low output of uranium-233 in the designed water-cooled apparatus has to be rejected as a possible prototype of a thorium reactor for industrial-scale production of uranium-233.

I thus come to the conclusion that although this project of a water-cooled reactor has a very attractive design and was approved by the Technical Council of the First Main Directorate for implementation, we should refrain from building it.

Laboratory No. 3 was designing, alongside with the apparatus discussed above, a heavy-water reactor in which metal is cooled by helium flux. According to calculations conducted by GSPI-11 and Lab[oratory] No. 3, this version will allow, for the same dimensions of the apparatus, to quadruple the amount of heat delivery and increase daily production of plutonium to 400 grams, and that of uranium-233 — to 80 grams. An apparatus with this output could be considered as a prototype for industrial thorium reactors, so this should be the sort of reactor we need to design and build.

Now, after the first stage of the uranium problem has been completed, the problems of thorium and helium cooling are among the main problems for research and development. Until now work in this field was mainly limited to calculations. As calculations alone cannot be used as a basis for an industrial project, it is necessary to build in the nearest future large-scale experimental facilities for testing the most important initial data.

Among such data are:

(1) measurement of the nuclear constants for uranium-233;

(2) experimental testing of the accumulation of uranium-233 in the experimental heavy-water reactor working with small amounts of thorium – uranium-233 mixture;

(3) experimental examination of aspects connected with gas cooling on a research atomic reactor with a small amount of enriched uranium and graphite.

I. This experimental heavy-water atomic reactor peculiar to testing uranium-233 reproduction (breeding) from thorium as foreseen by the Lab[oratory] shall operate at a power level of 100 – 500 kW and consist of a spherical reactor with a thorium blanket containing 200 grams of uranium-233 and approximately one ton of heavy water.

⟨...⟩

In view of above exposition I request that you consider and approve the following proposals:

1. The work of Lab[oratory] No. 3 and GSPI-11 shall be reoriented from heavy-water reactors to designing a helium-cooled reactor instead of a water-cooled one, to a power of at least 40,000 kW.

2. First Main Directorate and enterprise No. 817 are charged to accumulate in 1948 from 200 to 300 grams of uranium-233 by irradiating thorium in apparatus 'A', by assigning the necessary amount of enriched uranium received for this purpose from Plant No. 813.

3. First Main Directorate is charged to construct in 1948 at enterprise No. 817 a facility for separating 200 – 300 grams of uranium-233 from irradiated thorium using the technology being developed at the NII-9 and the RIAN.

4. First Main Directorate is charged to conduct at the NII-9 experiments on manufacturing monolithic beryllium – uranium and beryllium – thorium mixtures, as well as manufacturing protecting beryllium cladding for fuel slugs made of these mixtures."

The following words of I V Kurchatov deserve careful attention: "Now, after the first stage of the uranium problem has been completed, the problems of thorium and helium cooling are among the main problems for research and development."

Once Kurchatov submitted these memoranda, events unfolded as described below. On 15 November, Alikhanov prepared and submitted to PGU NTS an appropriate response that was immediately discussed at a meeting of NTS on 15 November 1948 [15]. In his reply "On building unit No. 7" Alikhanov pointed out:

"If our knowledge and experience of gas cooling at this moment of time were at least to some extent as advanced as they are in the case of cooling with water, this Kurchatov's conclusion concerning the heavy-water unit and helium-cooled unit would not meet with any objections.

⟨...⟩

I am of the opinion that unit No. 7 cooled with product 180 needs building even though it may not rate as a prototype of the future unit employing product 180. Unit No. 7 with a reflector will: (1) ensure a yield of 8 – 10 g AP-3 per day, which would be impossible in apparatus 'A'; (2) generate experience for the operation of gas-cooled unit No. 7; (3) make it possible in the future switching to converting A-95 or off-grade plutonium to AP-3."

On 13 November, Kurchatov signed and on 14 November 1948 sent to Pervukhin the following letter written in his own hand [17]:

"To Cde. Pervukhin M.G.

In response to your request, here is my opinion concerning the construction of the heavy-water atomic reactor.

1. The heavy water-cooled 120,000 kW reactor should notbe built according to the technical project of Laboratory No. 3 and GSPI-11, which was approved by the Technical Council.

2. Laboratory No. 3 and GSPI-11 should be obliged to develop the project of a helium-cooled 400,000 kW reactor. Before accumulating an adequate amount of uranium-233 this reactor should be tested with a conventional uranium loading.

3. The reactor should be constructed on the territory of enterprise No. 817 on the site selected jointly by the staff of enterprise No. 817, the builders and Academician Alikhanov.

My arguments supporting the conclusions presented above are in my letter to Cde. Beria."

On 15 November 1948, a meeting of the PGU NTS heard Kurchatov's memorandum and Alikhanov's considerations and came to the following decision (let us remind the reader of the code words of the period: A-9 stands for 'natural uranium'; A-95 — enriched uranium; AP-3, selenium — uranium-233; B-9 — thorium; product 180, hydroxyline — heavy water) [17]:

"1. In view of the fact that the first industrial unit with natural uranium and heavy water is required to test systems of this type and at the same time makes it possible to try out on this unit a large number of technical issues involved in designing systems utilizing thorium and heavy water (they constitute promising systems, which is confirmed by Academician I V Kurchatov), PGU NTS supports the proposal of Academician A I Alikhanov, already approved by Section No. 1, to build the first industrial unit with natural uranium and heavy water, and to build unit No. 7 on a site within the territory of enterprise No. 817.

2. Since the use of thorium as raw material for a nuclear reactor considerably expands the material resources, while demanding the creation of substantially more powerful facilities, PGU NTS approves the proposal of Academician Kurchatov on the need to intensify the research, experiment and design efforts connected with developing and designing nuclear reactor systems with thorium, heavy water and helium cooling.

3. Taking into account that the problem of using thorium is now the main problem for research and technological development, PGU NTS confirms that research and experimental programs aimed at thorium utilization in nuclear reactors, conducted at Laboratory No. 3 of the USSR Academy of Sciences, are important and must be pursued by the Laboratory as first-priority projects.

Monitoring and supervision of the research and experimental work at Laboratory No. 3 and other research organizations on the part of the NTS should be the responsibility of the member of the NTS V S Emel'yanov.

⟨...⟩

5. PGU NTS approves I V Kurchatov's proposal on the need to speed up the accumulation of 300 g of uranium-233 at enterprise No. 817. In this connection it is necessary to speed up the completion of work on the technology of extraction of uranium-233 from irradiated thorium and the construction for this purpose of the research facility at the NII-9 and the experimental plant at the enterprise No. 817."

Brief comment and possible explanations of the situation involving the first industrial heavy-water reactor. First, despite Kurchatov's high standing as scientific leader of the Atomic Project, members of the NTS Section No. 1 and NTS as a whole chose not to second his proposal to terminate the work on an industrial heavy-water reactor; second, they confirmed the high priority of the work on the helium-cooled heavy-water reactor operating under a thorium regime as they favored expanding the raw materials resources. One of the possible explanations of Kurchatov's changed attitude toward the heavy-water reactor could be that he realized that the production of weapons-grade plutonium can be sustained by using industrial uranium – graphite reactors — a direct indication of this is found in the memorandum of 4 November 1948 given above. At the same time, he understood perfectly the physical attractiveness of helium-cooled heavy-water reactors with thorium. It was for this reason that he proposed to redirect the work of Laboratory No. 3 to designing this type of reactors.

Reactor No. 7 operated in the plutonium production mode until July 1953. On 12 April 1952, B L Vannikov, A P Zavenyagin, I V Kurchatov, E P Slavsky, and N I Pavlov wrote to Beria and suggested that between 1 July 1953 and 1 April 1954 the reactor No. 7 at the enterprise No. 817 be changed over to tritium production needed for testing the hydrogen bomb RDS-6 [18].

A month had not yet gone by when the FMD leadership sent L P Beria a different suggestion proposing to rearm reactor No. 7 to a thorium regime, and attached a draft resolution. The letter by FMD leaders pointed out that once the tritium requirement for testing the hydrogen bomb RDS-6 was satisfied, it would be possible to change over reactor No. 7 (plant No. 3, as it was referred to at enterprise No. 817) to the production of uranium-233 [19]; the one-time loading of thorium into the core of reactor No. 7 would be 4.2 t, the annual requirement for thorium — 25 t; in this case, 30 kg of uranium-233 and 15 kg of plutonium with increased neutron background could be produced annually. If the need for tritium became pressing, reactor No. 7 was to be switched to the tritium generation mode without additional modifications. These proposals and the draft resolution were agreed on with A I Alikhanov. It was noted that the feasibility and desirability of forcing reactor No. 7 to operate in uranium-233 breeding mode required additional theoretical and experimental investigation and that the proposals should be finalized in 1953.

The resolution of the USSR CM enacted on 16 May 1952 on the basis of the letter from the FMD contained the following assignments [20]:

"For the purpose of seeking possibilities to utilize thorium for the industrial production of uranium-233, the USSR Council of Ministers ORDERS:

That First Main Directorate of the USSR Council of Ministers (Cdes. Vannikov, Zavenyagin) be charged with responsibility for:

1. Beginning on 1 January 1953, plant No. 3 of enterprise No. 817 should be converted for the production of uranium-233 for which ceramic tubular uranium slugs enriched to 2% and new increased-diameter technological channels should be manufactured by the date indicated above, and condensate pumps should be reassembled so as to allow independent repair work.

2. The following should be submitted to the USSR Council of Ministers by 1 August 1953:

(a) a proposal on constructing an experimental facility for testing the feasibility of building a thorium reactor with the uranium-233 breeding;

(b) a plan of a research program aimed at solving the uranium-233 problem;

(c) a conclusion on the possibility of operating plant No. 3 in the uranium-233 breeding mode.

3. Draft proposals for the program of uranium-233 production for the period 1953 – 1955, taking into account the relevant experience accumulated at plant No. 3, should be submitted to the USSR Council of Ministers by 1 July 1953."

Three months later, on 2 September 1952, the USSR Council of Ministers passed a resolution on the construction of the second heavy-water reactor No. 7A at the enterprise No. 817, which said [21]:

"1. Accept the proposal of First Main Directorate of the USSR Council of Ministers (Cdes. Vannikov, Zavenyagin, Slavsky and Alikhanov) to build on the territory of enterprise No. 817 a heavy-water unit 7'a' of a power of 200 – 250 arbitrary units with heavy water and 2%-enriched uranium.

The unit should be constructed by way of expanding plant No. 3 and utilizing resources belonging to ancillary services of this plant.

The unit should be designed for the purpose of producing uranium-233, in a way that includes the technical possibility of switching the process to the production of tritium or plutonium.

2. The project of unit 7'a' should be carried out under scientific leadership of Academician A I Alikhanov and his deputy Vladimirsky V V, Candidate of Physicomathematical Sciences.

3. First Main Directorate of the USSR Council of Ministers (Cdes. Vannikov, Zavenyagin) and GSPI-11 (Cde. Gutov) are obliged to develop by 15 November 1952 project task orders and cost estimates for the entire volume of work required for expanding plant No. 3 and should submit them for the approval of the USSR Council of Ministers before 15 December 1952."

We see in this resolution that the project outlines for the reactor 7'a' were to be submitted on a short notice (at later stages OKBM, the principal designer of this reactor, renamed it OK-190) and that it was to be housed within the building of the existing reactor No. 7 (OK-180). It is necessary to remark here that the above resolutions pointed to the serious intentions of the leaders of the Atomic Project to extend the work on the thorium regime.

The memorandum of 12 December 1952 submitted by E P Slavsky and A I Alikhanov to L P Beria on the thorium problem stated [22]:

"The USSR Council of Ministers Resolution No. 2307-878ts/sd dated 16.05.1952 obligated the FMD together with the Thermotechnical Laboratory to submit:

(a) the proposals on implementation of an experimental facility for testing the feasibility of building a thorium reactor designed for the uranium-233 breeding;

(b) a plan for a research program for solving the uranium-233 problem;

(c) conclusions on the possibility of converting the operation of plant No. 3 at the enterprise No. 817 to the uranium-233 breeding mode.

We report to You here on the execution of these assignments.

1. Building an experimental facility for testing the feasibility of constructing a thorium reactor with the uranium-233 breeding, while using thermal neutrons is inexpedient.

It is expedient to seek approaches to using the process of uranium-233 breeding in the following areas:

a) Designing energy-producing units in which breeding would not be the principal target but rather a secondary one; this may lead to an economically viable process.

b) Studying the physical characteristics of uranium-233 breeding unit while using intermediate-energy neutrons.

It can be expected that the thorium – uranium-233–heavy-water reactor using intermediate neutrons in the range from 1 to 1000 electron-volts will have the following advantages in comparison with facilities using thermal neutrons and a higher anticipated breeding ratio: a wider choice of construction materials; the possibility of a higher degree of product accumulation, and less frequent radiochemical-metallurgical processings of the metal.

In fact, the physical characteristics of uranium-233, thorium and the choice of construction materials in the range of intermediate energies are not known sufficiently well to carry out calculations for systems of this caliber.

2. The research plan for the Thermotechnical Laboratory for the year 1953 concerning the solution of the uranium-233 problem includes measuring cross sections and physical constants of uranium-233 and new construction materials (magnesium, zirconium) in the range of neutron intermediate energies. These measurements and theoretical calculations are to be completed in 1953 with the preparation of the conceptual design of the experimental unit with thorium and intermediate energy neutrons and with approximate calculations for the industrial unit.

In addition to the topic included in the research program, it may be possible to conduct the conceptual analysis of a sea-version thorium – uranium-233 – heavy-water type reactor using zirconium as the structural material, with the principal target being not the production of additional amounts of uranium-233 but the generation of energy at minimum expenditures of uranium-233.

There is also the possibility of combining the generation of energy and reproduction of the fissile material — a uranium-233 – heavy-water unit of the slurry type. The minimum amount of structural materials introduced into a slurry nuclear unit will make it possible to achieve the maximum possible breeding ratio.

The absence of fuel elements (slugs) and, therefore, the difficulties that their limited stability entails, makes it possible to prolong the time of service of the metal in the unit and to reduce losses and technological liabilities of metal in the chemical reprocessing cycle.

3. Calculations carried out at the Thermotechnical Laboratory showed that unit No. 7 can operate on uranium-233 in the breeding mode without significant modifications.

The breeding ratio may reach 0.22. The maximum output of the unit amounts to 20 g per day.

Similar calculations for unit No. 7A gave estimates of the breeding ratio close to those for No. 7 but the greater unit size increases both the loading of uranium-233 and the unit's power, while the daily output reaches 35 – 40 g per day.

In the mode described above, the breeding ratio is not high and the total output of the units is less than in a conventional process by a factor of 4 to 6.

The periodicity of the chemical and metallurgical reprocessing of the metal loaded into the unit will nearly double the uranium-233 liabilities in the production line, thus bringing down the valuable productivity of the entire process.

Therefore, a practical implementation of breeding based on uranium-233 in units of the No. 7 type operating in this mode cannot be recommended."

On 18 December 1952, Beria made the following resolution on the E P Slavsky — A I Alikhanov memorandum:

"For Cdes. Vannikov B L, Kurchatov I V.

Do address this matter with maximum seriousness. Discuss it most thoroughly once again at the Scientific – Technical Council and submit your conclusion on the issues in question, as well as your proposals on additions to the thorium-oriented research program for the year 1953. Deadline — 10 days."

Authors' comment on the document quoted. The E P Slavsky — A I Alikhanov memorandum puts forward several important considerations: first, on the expedience of generating power in combination with the minimal expenditure of uranium-233, instead of production of uranium-233 which was earlier considered as one of the types of the nuclear explosive; second, on the advantages of the thorium regime in a reactor with an intermediate energy spectrum of neutrons in comparison with thermal neutron reactors, and third, on the inexpedience of building an experimental thermal reactor for studying the process of uranium-233 breeding. In other words, Alikhanov's attitude in relation to the promise of search-type investigations into the thorium regime has changed in comparison with the previous period. In view of the tendency (predominant at the time) to test everything in bench-top setups, the decision to cancel the construction of the experimental reactor appears incomprehensible. We know that a number of experimental reactors were built at Laboratory No. 2 in subsequent years, mainly for checking the design and development decisions proposed for the submarine reactor.

The Slavsky – Alikhanov memorandum was discussed at the NTS meeting on 25 February 1953 at which A I Alikhanov presented his report [23]. The participants of this meeting represented the highest echelons and included the following members of the NTS: I V Kurchatov, D I Blokhintsev, V S Emel'yanov, A P Aleksandrov, I I Novikov, I K Kikoin, A A Bochvar, E P Slavsky, A P Vinogradov, A I Alikhanov, N A Dollezhal', B S Pozdnyakov and (part of the time) B L Vannikov; also invited were A I Leipunsky (Laboratory 'V'), I N Golovin, I I Gurevich, S M Feinberg, G A Gladkov (LIPAN). The speakers were: A I Leipunsky, I I Gurevich, A A Bochvar, D I Blokhintsev, S M Feinberg, E P Slavsky, N A Dollezhal', A P Vinogradov, I K Kikoin, A P Aleksandrov, V S Emel'yanov, B S Pozdnyakov, and I V Kurchatov. Given below are quotes from the minutes in which code words are replaced with today's terminology:

"As follows from Cde. A I Alikhanov's presentation, a practical implementation of the process of breeding in units of the No. 7 type that utilize thermal neutrons cannot be recommended at the present time. Aluminium typically used in reactors greatly reduces the breeding ratio.

Replacement of aluminium with other materials — magnesium- or aluminium-based alloys — would result in a breeding ratio of 0.20.

The most favorable process for use in breeding would be a process combining reproduction of fissile material with power generation.

The following main areas of work in development of uranium-233 – thorium reactors appear advisable:

(a) application of gas cooling;

(b) passage to the range of intermediate energies;

(c) use of a homogeneous reactor.

A gas-cooled apparatus may provide a breeding ratio of about 0.15 – 0.20 in the thorium – uranium-233 cycle (ignoring losses in the chemical and metallurgical processes).

The development of fuel elements for this sort of units in the form of wire coated with a thin aluminium layer is expected to provide encouraging results.

A unit operating on intermediate-energy neutrons will make it possible to reduce the absorption of neutrons by fission products (poisoning and slags) and increase the breeding ratio to 0.3 – 0.35.

By now the facility No. 7 and the cyclotron of the Thermotechnical Laboratory along with the reactor MR of the Laboratory of Measuring Instruments have yielded data on the fission cross section and $\nu_{\rm eff}$ that confirm the expediency of utilizing uranium-233 for breeding in reactors operating on intermediate-energy neutrons.

A homogeneous heavy-water apparatus that contains a fine suspension of uranium-233 oxide at a concentration of 0.003 – 0.005 may reduce the losses in construction materials and fission poisons to a minimum, and will also greatly reduce losses in the course of the metallurgical and radiochemical processes.

The breeding ratio that can be achieved under favorable conditions in a homogeneous reactor may be 0.2 – 0.25.

The Thermotechnical Laboratory is conducting a study to clarify the conditions of the burning of the detonating mixture that is formed in large quantities in the homogeneous apparatus."

The NTS passed a detailed resolution that we reprint here in full so as to demonstrate the situation with the thorium problem at the moment of its discussion:

"1. NTS recognizes, on the basis of the report presented by Cde. Alikhanov A I, the conclusions made by Cdes. Leipunsky A I, Gurevich I I and Bochvar A A, and the subsequent exchange of opinions on the thorium problem, that the calculations, theoretical analysis and research work conducted by this time at the Thermotechnical Laboratory, Laboratory of Measuring Instruments and Laboratory 'V' point to the advisability of further work on the uranium-233 issue:

(a) in contrast to other fissile materials (uranium-235 and plutonium), the breeding ratio of uranium-233 on thermal neutrons is greater than unity;

(b) thorium constitutes an additional source of raw material;

(c) in view of the possibility of the accumulation of a higher concentration of uranium-233 (up to 0.1 – 0.2%) in comparison with the accumulation of plutonium (0.02 – 0.03%) in uranium, the cost of radiochemical and metallurgical production of uranium-233 is expected to be lower than that of plutonium.

2. The next pressing problem for achieving progress in the thorium problem is to accumulate 10 – 20 kg of uranium-233.

The next task will be to implement an experimental power-generating unit and combine it with the uranium-233 breeding; this may require about 50 – 100 kg of uranium-233.

3. NTS recognizes, on the basis of the experimental data gathered so far, in agreement with earlier expectations, and on the basis of the conclusions arrived at by Cdes. Alikhanov A I, Leipunsky A I, Gurevich I I, Feinberg S M, Gladkov G A (n.vkh. T-327/I4 sd 1953, attached), that the maximum possible values of breeding ratios are:

with thermal neutrons	0.3 ± 0.02
with intermediate-energy neutrons	0.46 ± 0.1.

The practically achievable values of breeding ratios in heterogeneous systems (assuming losses to radiochemical and metallurgical reprocessings to be 4%) are expected to be:

with thermal neutrons	nearly 0
(it is only possible to generate power with zero consumption of fuel)	
with intermediate-energy neutrons	from 0.1 to 0.2.

The breeding ratio may be increased to values closer to the maximum mentioned above in apparatuses operating on fissile material used as a suspension, solution or chemical compound (homogeneous crystallizers) provided fission poisons are removed without interrupting the main process ('crystallizer' standing for 'reactor' — *Translator*).

4. NTS recognizes that in view of the relatively small additional production of fissile material in the uranium-233 – thorium process, the most promising option is to employ it for power generation combined with the production of a moderate amount of fissile materials.

5. NTS recognizes that it would be inexpedient to change over unit No. 7 to a breeding regime in the uranium-233 – thorium system.

Even though calculations of the Thermotechnical Laboratory point to the value of a breeding ratio of 0.15 – 0.20 and the accumulation of uranium-233 in unit No. 7 to 15 – 20 g per day, losses due to radiochemical and metallurgical reprocessings will make getting additional amounts of uranium-233 impossible. It appears possible to reprocess up to 25% of the initial loading of uranium-233 in unit No. 7 during one campaign (prior to the radiochemical and metallurgical cycle). As a result of breeding, the total amount of uranium-233 by the end of the campaign would exceed the initial amount by 4%. As the losses caused by the subsequent radiochemical and metallurgical reprocessings cannot be lower than 4%, no additional production of uranium-233 is possible by using unit No. 7.

6. The process utilizing intermediate-energy neutrons can be expected to improve the breeding ratio in comparison with the process utilizing thermal neutrons. This conclusion is based on the fission cross section and ν_{eff} data obtained using unit No. 7 and the cyclotron of the Thermotechnical Laboratory, as well as unit MR at the Laboratory of Measuring Instruments for uranium-233.

The Thermotechnical Laboratory (Cde. Alikhanov A I) is charged with submission to the attention of the NTS by 1 April 1953 its proposals on the implementation of the physical reactor, up to 1 W in power, for the conduction of more precise measurements of physical constants with neutrons in the intermediate energy range.

Section No. 9 (Cde. Kurchatov I V) is charged to consider and augment the plan of experimental work for 1953 – 1954 on studying nuclear physics constants required for calculations of reactors utilizing intermediate-energy neutrons; for this project, unit MP and the equipment of other laboratories shall be made available.

7. NTS considers it necessary to build an experimental reactor incorporating breeding with the uranium-233 – thorium system of total power of approximately 30 – 50 thousand kW (in 1954 – 1955) in order to determine the operational and physical characteristics of the uranium-233 – thorium process, combining production of uranium-233 with the generation of electric power. Comrade Alikhanov A I is charged to prepare task orders for designing the reactor of the above type and submit these task orders and the relevant feasibility study for an analysis by the NTS in the 3rd quarter of 1953.

8. NTS approves Cde. Alikhanov A I's proposal to continue the work of the Thermotechnical Laboratory on the power-generating homogeneous breeder-type reactor (in addition to the project of the unit with intermediate-energy neutrons; the aim is to meet the targets drawn up in the USSR CM Resolution of 8 July 1952) that includes:

(a) experimental work on the formation and burning of the detonating mixture in water, on the study of suspensions and solutions of uranium compounds;

(b) development of the schematic diagram of heat exchangers;

(c) experimental studies of the homogeneous reactor requiring installation of a special setup in unit No. 7.

NTS recognizes the need for organization and implementation of work at the NII-9 (Cde. Bochvar A A) and at the Institute of Geochemistry (Cde. Vinogradov A P) on studying homogeneous mixtures of fissile materials with liquid heat carriers and moderators (water, other liquids and liquid metals).

Comrade Emel'yanov V S and Cde. Alikhanov A I together with Cdes. Bochvar A A and Vinogradov A P are charged to discuss within a month and approve proposals on a work program for 1953.

9. Comrade Alikhanov A I is charged to prepare within a month, with the help of the Institute for Physical Problems, Laboratory 'V' and the Laboratory of Measuring Instruments, and submit for consideration to the Section No. 1 a plan of experimental work on a gas-cooled thorium – uranium-233 reactor; the plan shall include a test with a wire specimen in the gas loop in the MR unit ('specimen' is a code for 'fuel element' — *Translator*).

10. The Laboratory of Measuring Instruments (Cde. Kurchatov I V, Cde. Kikoin I K) are charged with submission to the NTS for consideration its proposals on the possibility and expediency of utilizing the sublimate in reactor technology in order to shorten the radiochemical – metallurgical phase of the process.

11. Section No. 4 (Cde. Emel'yanov V S) is charged to discuss and approve the planned task orders on the technology of uranium-233 extraction."

Brief comment on the above resolution of the NTS. The resolution shows that the scientific community supported the

proposals of the Thermotechnical Laboratory and A I Alikhanov on the intensification of the work on the thorium cycle. The NTS approved the creation of a thorium – uranium-233 power-generating homogeneous reactor but at the same time advised against changing over reactor No. 7 to the thorium regime.

Despite the NTS decision of 25 February 1953, the change over of reactor No. 7 to the thorium regime was not annuled. According to the USSR CM Resolution of 8 April 1953, downtime was ordered for the reactor from 5 May to 20 July 1953 for the reconstruction related to changing over to the thorium regime [24]. This resolution gave assignments to various ministries concerning the production of the equipment and carrying out the construction and assembling operations for reactor No. 7.

However, before the above governmental decisions were made, large-scale calculation and experimental work was conducted at Laboratory No. 3 on the thorium regime; we discuss it below.

8. Calculation substantiation of thorium regimes for heavy-water reactors

The decision of the PGU NTS of 5 September 1945 [1] and the subsequent R&D plans by FMD from 1948 to 1953 constituted the basis for Laboratory No. 3 to conduct calculations and experimental efforts to elaborate the thorium regime for heavy-water reactors of various types, first and foremost for the industrial reactor No. 7.

On 15 May 1946, A I Alikhanov and M A Andreev (the person assigned by the USSR CM to monitor Laboratory No. 3 work) forwarded a memorandum to Beria that we partly quote below [25]:

"1. Research

The program of research on the DK problem (on theory and calculations) was started two months ago.

The work is being carried out in the following areas:

1. Accumulation of initial data for designing a physical DK and an industrial DK (Alikhanov, Vladimirsky). At the moment there arose the need to organize a group of designers to design the physical DK and to prepare a draft design of the industrial DK.

2. Development of the theory of DK as no such theory exists at the moment (Landau, Pomeranchuk). The main computational obstacles have been overcome and there is reason to believe that this theory will be evolved.

3. Work was started on the theory of the industrial item (Landau, Pomeranchuk). The work is being continued now at the Institute of Acad. Semenov."

Note the string of names of the famous Soviet physicists that Alikhanov invited to work at Laboratory No. 3 on the problem of the heavy-water reactor.

8.1 Conceptual studies of thorium regimes

Calculations carried out at Laboratory No. 3 allowed Academician L D Landau (who had his second job as head of Theoretical Department of Laboratory No. 3) to list in his report "On the work in theoretical physics" to the meeting of the PGU NTS on 10 February 1947 the following problems, among others, within the thorium regime task [26]:

"Fissile materials are used extremely inefficiently in conventional reactors. The reason for this is that the amount of plutonium produced as a result of fission reactions is lower than the amount of the initial useful component — uranium-235 — consumed in the process.

In principle, however, not only could all the uranium-235 be utilized, but so could all the uranium.

Therefore the problem of regeneration, i.e., complete utilization of the entire uranium, is one of the main problems facing the researchers.

In this connection it is very interesting to look at reactors designed to transform thorium to uranium-233, since it is possible that the problem of regeneration for such reactors could be easier to solve."

The development of the theory of heterogeneous reactors carried out at Laboratory No. 3 in the course of 1946 – 1947 made it possible to conduct conceptual studies of various types of reactor systems with thorium. As early as May 1947, the scientists of Laboratory No. 3 concluded that the uranium-233 breeding in a heavy-water reactor is possible. With this in mind, V V Vladimirsky and A D Galanin calculated a thorium – uranium-233 – heavy-water system with nuclear fuel shaped into a thin wire of 5 – 6 mm in diameter 'wrapped' — in the words of the authors — "in a layer of aluminium about 0.5 mm thick." As mentioned in Ref. [27], "there is some foundation to the anticipation that working with thorium in heavy water without using aluminium sheaths would be feasible but sheaths were nevertheless taken into account to increase the reliability of the conclusions." It must be said that this option — that is, working with thorium slugs without sheathing — was the object of serious consideration at Laboratory No. 3. There was a foundation for this approach — this gave an advantage in neutron balance and in the product yield. The authors of these calculations estimated that thorium could be utilized as a wire 1 mm in diameter, which produced power output several times greater than in the version with aluminium cladding. Moreover, V I Vernadsky pointed out at some point that "thorium belongs to a group of elements that stay away from the geochemistry of water, or rather of aqueous solutions. It does not pass into solution and takes no part in the water equilibrium on the Earth...." [28]. In view of this, an experiment was later run at Laboratory No. 3 to investigate the corrosion resistance of thorium to water (see below).

These calculations took into account all possible sources of undesirable absorption of neutrons by fission products (FPs) and aluminium cladding of fuel slugs for two versions of the reactor: with a reflector, and without it but with leaked neutrons captured for the production of uranium-233. The results of this calculation show that at the thermal power level of 50 MW in the reactor with a D_2O reflector the amount of thorium in the reactor core was 0.95 t, and at the periphery it was 10 t, reactor output in uranium-233 was 10 g/day, and breeding ratio was 1.22 – 1.20 [27].

The leaders of Laboratory No. 3 concluded on the basis of the calculations that "...when a reactor operates with activated thorium, i.e., in the thorium + uranium-233 + moderator system, conditions can be created under which not only does the reaction proceed until the thorium is completely used but, in addition, 20 to 22% more fissile uranium-233 is produced than was consumed in the same period" [27].

A I Alikhanov's report on the work of Laboratory No. 3 during the first half of 1948 indicated [29]:

"The tasks of Laboratory No. 3 include:

(a) work on the aspects of reactor science connected with developing industrial-scale facilities of the uranium – heavy-water type;

(b) work on the topics involved in utilizing thorium. ⟨...⟩

As for the second of these tasks, Laboratory No. 3 carried out the following work:

1. The possibility was considered of implementing, in principle, systems that breed the fissile material and it was shown that the breeding is impossible in uranium – graphite or uranium – heavy-water systems, while in thorium – uranium-233 systems with heavy water or graphite it is possible.

2. Conditions of operation of a breeding facility were theoretically found and it was shown that breeding in the thorium – uranium-233 system with heavy water could reach up to 122%, and in the thorium – uranium-233 system with graphite — up to 115%.

3. Absorption of neutrons with energy up to 0.03 eV, several eV and about 1 MeV by thorium was measured and thus provided the data required for the preliminary calculations for systems with thorium.

4. Requirements were formulated for thorium's purity and industry started producing metallic thorium in compliance with them.

5. The composition of those fission products of uranium-233 which negatively affect the breeding of the fissile material was investigated.

Preliminary experiments showed that uranium-233 produces smaller amounts of the harmful products, so-called fission poisons, than uranium-235.

In this way one of the important assumptions made for calculating the breeding ratios in the thorium – uranium-233 system was experimentally substantiated."

The results of research into the thorium problem were presented in more detail in the "Brief report on the current status of the thorium program" [30].

8.2 Thorium regime in industrial heavy-water reactors No. 7 and No. 7A

As we read in a report [30], intense investigation of thorium regimes was conducted with industrial heavy-water reactor No. 7 during 1948, and later with the reactor No. 7A of enterprise No. 817. We quote select passages from this report that reflect the main results:

"1. The calculations for the industrial-scale unit for the breeding of fissile uranium-233 (report by Vladimirsky and Galanin). These calculations took into account the known factors that may negatively affect the breeding ratio and the dimensions of the system at high-power levels.

The results of these calculations for systems with heavy water were already made available. The breeding ratio = 1.28, and the initial amount of uranium-233 = 18 kg.

2. The calculations for the industrial-scale unit for the breeding using a graphite moderator (report by Berestetsky). The calculation was carried out exactly as the former one and gave the following results: the breeding ratio = 1.15, and the amount of uranium-233 — 120 kg.

3. A preliminary evaluation for thorium – uranium-233 – Be systems with heavy water (report by Galanin). Thorium and uranium-233 are mixed to increase the area of the heat-removing surface. As large amounts of Be are introduced into the reactor and, furthermore, its neutron absorption coefficient is much higher than that of heavy water, it was necessary to take into account the Be effect on the breeding ratio and the amount of uranium-233 required in the system. ⟨...⟩

A reactor of the same dimensions and of the same design as unit No. 7 being designed now, which is loaded with thorium mixed with an equal weight of Be, has the breeding ratio = 1.20, and the amount of uranium-233 = 23 kg.

4. Calculations for an experimental unit with pure uranium-233 and heavy water (report by Vladimirsky and Galanin). For the final check on all conclusions concerning the systems involving the breeding, an experimental unit with uranium-233 and heavy water needs to be built.

Calculations showed that for such a unit we need 300 g of uranium-233 but that the breeding ratio will be zero. If the amount is 370 g, it becomes 1.17 ⟨...⟩."

The natural question arose immediately about accumulation of uranium-233 for commissioning the first reactor in breeding mode. For this purpose two scenarios were considered: loading a heavy-water reactor with thorium plus natural uranium (regime 1) or enriched uranium (regime 2). Report [30] gives a detailed description of the relevant calculations:

"The theory of these so-called mixed systems was elaborated by Vladimirsky and then more rigorously by Galanin (see report by Vladimirsky, and another by Galanin).

Using this theory, Galanin calculated first of all the amount of thorium that can be introduced into the unit being designed (No. 7) with natural uranium, and found the optimum arrangement of thorium rods in the lattice of A-9. The introduction of properly arranged thorium rods into unit No. 7 makes it possible to level off the heat release into the reactor between the central core and the edges and thus increase the unit's power.

Thereupon Galanin conducted detailed calculations for systems of mixed thorium and enriched uranium for various levels of uranium enrichment. Calculations were carried out for three types of reactor designs:

(a) heavy water-cooled unit No. 7 (being designed);

(b) heavy water-cooled pipe-shaped reactor;

(c) gas-cooled unit No. 7 (being designed). Enrichment level was varied from 1.3 to 3."

In order to increase specific reactor power, Alikhanov suggested fuel diluting with beryllium, as described in Ref. [30]:

"With this use of thorium, the change over of unit No. 7 from the uranium mode to operations with thorium and uranium-233 is realized by replacing uranium slugs with fuel slugs of thorium – uranium-233 – Be mixture or thorium slugs with Be and uranium-233 slugs with Be. The power of the unit then remains the same as with uranium only, i.e., about 100,000 kW, while the daily yield of uranium-233 rises to 20 g owing to the breeding."

Calculations carried out at Laboratory No. 3 showed that by utilizing uranium at 2% enrichment it was possible to accumulate 15 kg of uranium-233 after six months of reactor operation [31]. A physical calculation of a heavy-water reactor for the production of uranium-233, loaded with uranium enriched to 75%, was subsequently conducted at Laboratory No. 3. It gave the breeding ratio, the distribution of neutrons for various types of reflectors, the yield of uranium-233, etc. For this reactor regime, the estimated yield of uranium-233 , i.e., the ratio of the amount of produced uranium-233 to that of the burnt uranium-235, may come to 0.795 – 0.888 [32].

To test the characteristics of the thorium regime with the breeding, Laboratory No. 3 suggested building an experimental reactor with uranium-233 dissolved in heavy water. Calculations showed that it was necessary to have 400 g of uranium-233 and 1 t of heavy water. The reactor must be

surrounded by a blanket of about 1 t of thorium compounds to capture leaked neutrons. Unfortunately, the suggested experimental thorium reactor has never been built (see memorandum [22]).

In 1952, A D Galanin carried out comparative calculations of thorium regimes of industrial reactors No. 7 and No. 7A for various scenarios of loading uranium-233 and various values of reactor power and found the breeding ratio $\eta = \nu' - 2$ (A D Galanin's terminology) [33]. The maximum theoretical value of η with thermal-spectrum neutrons equals 0.34. According to A D Galanin's calculations, the value of η for reactor No. 7A was 0.184 – 0.189 for uranium-233 loading from 117 to 75 kg, which corresponded to a power level of 140 – 180 MW, and a uranium-233 daily yield of approximately 42.5 g. When the technical project of reactor No. 7A was discussed at the NTS meeting on 25 March 1953, the following main characteristics were approved: thermal power — 255 MW; number of technological channels (TC) — 644, and that of channels for thorium loading — 418; the initial loading: uranium at 2% enrichment — 8.15 t, and thorium — 16 t; the diameter and length of uranium fuel slugs — 35/31 mm and 100 mm, respectively; the campaign duration — 165 days; annual yield of plutonium and uranium-233 — 33 and 46 kg, respectively; the amount of heavy water in the reactor — 82.5 t; water temperature at the inlet of the reactor — 20°C, and at the output — 65 °C [34]. However, reactor No. 7A was never tested in the thorium regime because of the absence of sufficient amounts of enriched uranium.

9. Heavy-water gas-cooled reactors

In accordance with the PGU NTS resolution of 15 November 1948 [15], Laboratory No. 3 and GSPI-11 worked actively on a reactor with a gaseous (helium) coolant and heavy-water moderator. This unit was known as the KS reactor (selenium pile). A resolution of the NTS suggested that the GSPI-11 draft the project task orders for a power reactor capable of handling three types of fuel loading: (1) natural uranium; (2) enriched uranium and thorium, and (3) uranium-233 with breeding. During 1949 and the first half of 1950, the researchers of Laboratory No. 3, A D Galanin, I Ya Pomeranchuk, and B L Ioffe, conducted preliminary physics calculations for the first two operation modes of the above reactor. Work in the thorium regime of the reactor was to be implemented as follows: during the first period, the reactor operates with a loading of enriched uranium and thorium in the core zone, and the accumulation of uranium-233 also occurs in the blanket. After a sufficient amount of uranium-233 is accumulated, the reactor is loaded with a thorium – uranium-233 alloy. These calculations made it possible to prepare in the first half of 1950 the technical task orders for the GSPI-11 to implement the design work.

We shall quote only a small part of these calculations, inasmuch as they concern the thorium regime and are present among the design documents of the GSPI-11 [35 – 38]. The relevant document [36] initially considered the power facility composed of two alternatively operating reactors: one reactor to work for eight days, and the other to be reloaded (this schedule was later dropped). The thermal and electrical power of each reactor was 500 MW and 100 MW, respectively, while the annual product output was 151 kg of plutonium and 10 – 15 kg of uranium-233. The thorium – uranium-233 regime was considered, which required, as followed from calculations, 103 kg of uranium-233. In order to produce this amount of uranium-233, when loading natural uranium and thorium, seven years would be required. Hence, operations of a reactor with enriched uranium (fuel elements 2 mm in diameter), thorium and beryllium as a blanket over the fuel, with thermal and electric powers of 560 and 120 MW, respectively, were analyzed. It was found that 37.5 kg of uranium-233 can be produced annually with the initial loading into the reactor of 6.66 t of thorium and 90 – 130 kg of uranium-235; the gas (helium) temperature at the reactor inlet was assumed to be 50 °C, and that at the output, 500 °C. According to the estimates made by GSPI-11, the capital investment into the atomic power station would reach 661.5 mln rubles, of which the cost of heavy water was 145 mln rubles, and the cost of helium was 5.1 mln rubles. The annual electric power output was estimated as 73×10^7 kW h, its cost was 73 mln rubles, and the cost of the produced uranium-233 amounted to 305 thousand rubles per kg [36]. According to the FMD official data, the cost of plutonium produced by enterprise No. 817 in 1951 was 15,152,000 rubles per kg and, according to the annual plan for 1952, was estimated as 9,600,000 rubles [39]. Short of starting a critical analysis of the methods used to calculate the manufacturing cost of uranium-233 in those times, we can state with certainty that the actual cost of produced uranium-233 based on the data of the GSPI-11 was not higher than the cost of plutonium manufactured by the industrial uranium – graphite reactors of enterprise No. 817. This conclusion contradicts I V Kurchatov's words on the high cost of uranium-233 that we find in his memorandum [40]. Later on, this facility was transformed into a power-generating carbon-dioxide-cooled KS reactor with the natural uranium as nuclear fuel.

10. Power heavy-water reactors in the thorium cycle

After many years of research, the scientists of the TTL came to a conclusion about the crucial advantages of homogeneous power reactors intended for power generation and production of uranium-233. The TTL director A I Alikhanov generalized these suggestions in his "Report on new types of power-generating crystallizers" [41] that he sent to the Learned Secretary of the NTS of the Ministry of Medium Machine Building (MMMB) B S Pozdnyakov on 13 January 1954 in connection with the anticipated discussion of the prospects for developing power reactors with the top level of the Ministry. The report suggested the following types of power reactors for subsequent elaboration:

(1) a homogeneous thermal reactor with uranium-233 oxide as the nuclear fuel suspended in heavy water, and thorium as the fertile material;

(2) a heterogeneous intermediate-neutron heavy-water reactor with uranium-233 as the nuclear fuel and thorium as the fertile material placed within the reflector;

(3) a heterogeneous thermal heavy-water reactor with natural uranium;

(4) a heavy-water reactor with a gaseous heat carrier working on natural uranium, without combining it with the production of uranium-233, as was suggested earlier.

In his report, A I Alikhanov gave first priority to the homogeneous thermal reactor and the heterogeneous intermediate-neutron reactor with heavy water for the heat carrier and moderator. Two versions of the homogeneous power reactor with heavy-water reflector and uranium-233 oxide (as a suspension) were considered: an industrial unit of 250 MW

thermal power, and an experimental unit with thermal and electric powers of 50 MW and 5 MW, respectively. The initial loading of uranium-233 was 26 and 15 kg, respectively, and that of thorium oxide in the form of suspension was 10 t in the reflector of each of these versions. The breeding ratio was evaluated as 1.18 – 1.22 for both versions. With a reactor power of 250 MW, the uranium-233 annual consumption amounted to 100 kg, the annual yield of new uranium-233 was up to 120 kg at a concentration of about 2 kg t^{-1}. The steam parameters at the output of the reactor were as follows: temperature — 210 °C, pressure — 20 atm; steam parameters per turbine — 116 °C, 2 atm; efficiency — 10%. These parameters were higher for the experimental reactor: 276 °C, 60 atm, 246 °C, 20 atm, and 20%.

Two modes of heat removal from the reactor core were considered: by boiling a steam – water mixture, and by a nonboiling mixture with natural circulation. The reactor is a cylindrical or spherical tank made of zirconium sheets and filled with a suspension of uranium-233. The tank is surrounded with a reflector made as a firm and leakproof shell filled with heavy water with a thorium suspension dissolved in it. All this was placed in a steel enclosure built to withstand pressure arising if circulation of the steam – water mixture suddenly stops. The reactor is controlled by varying the concentration of uranium-233, and also by a regular cleaning of fission products out of the fuel mixture. According to calculations, the reactor's operation is stable and self-controlled owing to the large temperature coefficient of reactivity. It is expected that thorium will be continually purified and that uranium-233 will be extracted. A I Alikhanov sent the appropriate technical task orders for the homogeneous and heterogeneous reactors to B S Pozdnyakov at NTS on 22 January 1954 for the approval [42].

At the beginning of 1953, Laboratory No. 3 formulated high-priority problems in research and technology for the homogeneous reactor, namely [43]:

(1) To determine the rate of radiochemical deterioration of solutions containing suspensions of thorium oxide and uranium-233 in the temperature range from room temperature to 300 °C, when exposed to irradiation and fission fragments.

(2) Simulation of suspension flow and the study of its stability under working conditions.

(3) Erosion caused by thorium oxide and uranium-233 suspension in construction materials in the reactor vessel and communications of the reactor.

(4) Investigation of the processes of formation of the detonating mixture and methods of burning it.

(5) Development of methods for removing fission products from solutions and suspension.

The program of work on the homogeneous reactor was discussed at a meeting of Section No. 1 of the MMMB NTS on 4 August 1954; the report was presented by A I Alikhanov [44]. Section No. 1 approved the program of experimental work on the homogeneous reactor using dedicated benchmark facilities.

Section No. 1 also charged Plant No. 92 (in Gorky) with designing these benchmark facilities and submitting their results for the consideration of Section No. 1. On 12 April 1954, Deputy Minister E P Slavsky sent to V D Maksimenko, Director of Plant No. 92, a letter with the assignment of preparing a draft design of the homogeneous power reactor complying with the task orders of the Thermotechnical Laboratory [45].

At the same time, the NTS possessed a number of proposals from the LIPAN, Laboratory 'V', and Laboratory No. 3 concerning various types of power nuclear reactors. In view of this, the NTS Learned Secretary B S Pozdnyakov sent the Minister of Medium Machine Building V A Malyshev a memorandum on 5 November 1953 in which he pointed out [46]:

"The NTS possesses some documents (memoranda and reports) from the LIP, TTL and Laboratory 'V' on the development of power-generating crystallizers: ⟨...⟩

2. The TTL (Cde. A I Alikhanov) presented material on the following aspects:

(a) in October 1953: on the feasibility of building a homogeneous power thermal reactor with heavy water chosen as the moderator and coolant and with uranium-233 as nuclear fuel, possibly with reproduction at a breeding ratio of 1.2;

(b) in October 1953: on the power reactor operating with intermediate-energy neutrons. The reactor was to be designed for the uranium-233 – thorium cycle. Heavy water was chosen as the moderator and coolant;

(c) in the 2nd quarter of 1953: on KS-type gas-cooled power reactor with heavy water chosen as the moderator. The proposal was discussed at a meeting of NTS Section No. 1 and judged promising."

To prepare appropriate proposals, B S Pozdnyakov recommended forming a commission of experts.

The memorandum has V A Malyshev's resolution 'Agreed' dated 6 November 1952.

Later on, a Commission was formed on the basis of the decision of the NTS Section No. 1 of 3 January 1954, which included B S Pozdnyakov (Chairman), A P Aleksandrov, A I Alikhanov, A I Leipunsky, V V Vladimirsky, V F Kalinin, B M Sholkovich, N N Kondratsky, S M Feinberg, V I Merkin, S A Skvortsov, and E P Anan'ev, and which presented to the NTS its conclusion on reactor types chosen for projects of the electric high-power station discussed by NTS Section No. 1 on 25 March 1954 [47]. The resolution indicated that proposals from the LIP, TTL, and Laboratory 'V' concerning nuclear reactors were considered. The commission recommended continuing the development, along with other types, of the KS-type reactor with a heavy-water moderator and helium coolant. To prepare new promising reactor types, the commission suggested building an experimental homogeneous heavy-water reactor with thermal and electric power of 50 and 5 MW, respectively.

The heterogeneous power heavy-water reactor was a vessel-type facility with the core formed of fuel assemblies (FAs) into a three-layer pipe; heat was removed by boiling heavy water through its natural circulation. The FAs installed into a rhombic lattice had zirconium outer layer diameters of 27.3 and 25.3 mm and an inner layer 0.025 mm thick made of uranium-233 [42]. The thermotechnical scheme included separation of the steam – water mixture, after which steam entered the steam generator where steam for the turbine was generated. According to calculations conducted at the TTL, the characteristics of the proposed nuclear reactor were as follows: thermal power — 350 MW, vessel diameter and height — 3250 and 2250 mm, and those of the reactor core — 1250 and 1140 mm, respectively, the initial loading — 53 kg of uranium-233 and 40 – 60 t of thorium, uranium-233 burnup — 50%, specific power in uranium-233 — 6.6 MW kg^{-1}; thermotechnical parameters were as follows: reactor steam capacity — 850 t h^{-1}, steam pressure and temperature at the

reactor output — 100 atm and 310 °C. The facility was designed to generate 450 t of steam per hour, at 15 atm of pressure and at a temperature of 250 °C. Nevertheless, the commission decided against recommending this reactor for further detailing as it found the proposal insufficiently elaborated.

11. Thorium resources

Plans concerning mining for thorium and manufacturing it were first mentioned in the memorandum of the leaders of the Special Committee and FMD to Stalin with a draft of the resolution "On the plan of special work for 1947" of 20 February 1947 [48] and in two resolutions passed on 1 March 1947 [49, 50]. Memorandum [48] mentioned that no thorium was produced in 1946; the plan for metallic thorium for 1947 was suggested as 1.5 t and this was approved by the resolution [49]. A number of governmental decisions were made later aimed at intensifying geological prospecting for thorium deposits (see, for example, Ref. [51]). The USSR CM resolution of 30 September 1947 [52] contained, in addition to assignments for mining thorium ores, an assignment for placing in service a Plant 'A' of the Ministry of Nonferrous Metal Industry (Mintsvetmet in *Russ. abbr.*) in the 4th quarter of 1948 with a capital investment of 51.5 mln rubles and annual output of 50 t of thorium salts and 20 t of metallic thorium. B L Vannikov in his letter to Stalin on 27 September 1947 and the USSR CM resolution of 30 September 1947 planned for the construction of a Mintsvetmet Plant '2A' (as a backup for Plant 'A') of annual output of 50 t of metallic thorium and 80 t of thorium salts [52].

On 3 September 1947, Mintsvetmet submitted to the Special Committee its report "On carrying out special works", whose first part on 5 pages was devoted to work concerning thorium [53]. The "Research work" section of the report stated:

"The adopted technology ensures the production of the metal complying with the technical specifications of the USSR Academy of Sciences Laboratory No. 3 (thorium content is no less than 99.3%, cumulative hazard coefficient — not higher than 5, uranium content — not higher than 1 g/t)."

The "Production of thorium" section of the report stated that 445 kg of metallic thorium was produced during 7 months of 1947 against the planned 350 kg and the annual plan of 1500 kg.

According to the larger resolution (27 items) of the USSR Council of Ministers of 22 December 1948, it was decided to focus the prospecting and exploration work on thorium at Mintsvetmet; the increment of thorium reserves was set to the amount of 4210 t [54].

As a result of the measures taken, the total amount of metallic thorium produced in 1946 – 1950 was equal, according to the information sheet signed by Deputy Head of the FMD P Ya Antropov, to 53.9 t [55]. The information sheet [55] also pointed out that the "explored reserves of thorium in deposits were 45,430 t by 1/02/1951 (recalculated to pure metal)." This data shows that there was a sufficient amount of thorium reserves to start operations of reactor No. 7 in the thorium regime.

12. Manufacturing of fuel and fertile materials

In view of the decision of the Government on changing over reactor No. 7 to the thorium regime, fuel slugs with 2%-enriched uranium and thorium slugs were required. The initial exploratory work on thorium began on an experimental setup at Giredmet. In 1951, the production of thorium was transferred to Plant 'A' in Moscow. Metallic thorium was produced as powder, which was then pressed into articles of certain geometry. In 1947, the plant had its first output of commodity products: metallic thorium (336 kg) and thorium salts (291 kg), as well as some other rare-metal production. On the whole, 650 kg of metallic thorium and about 7 t of thorium compounds were produced.

All during 1947 – 1948, work on improving the technology of producing metallic thorium and thorium slugs for the heavy-water reactor was conducted. As a result, Plant 'A' completely satisfied the need for thorium slugs meant for the operation of the industrial heavy-water reactor No. 7 (OK-180) at the enterprise 'Mayak' in the thorium regime.

13. Experimental work to justify the reactor characteristics

In addition to physics-based calculations, Laboratory No. 3 and the Institute of Physical Chemistry of the USSR Academy of Sciences (IFKh AN SSSR) carried out numerous studies on the nuclear properties of thorium and uranium-233, of their physicochemical properties, of the corrosion resistance of fuel and construction materials for the thorium regime of reactor No. 7, both to light and heavy water, etc.

13.1 Research on the nuclear properties of thorium and uranium-233

The work on measuring the nuclear constants of thorium and uranium-233 were incorporated in R&D plans of the FMD and rated as first priority for Laboratory No. 3. A I Alikhanov suggested a series of experiments to establish the basic nuclear constants of thorium and uranium-233; this will be descried below.

One of the important quantities affecting the value of the breeding ratio is the number ν of secondary neutrons per captured neutron. Calculations carried out at Laboratory No. 3 during 1947 – 1948 assumed this to equal 2.43. To measure this quantity ν, A I Alikhanov proposed a method which is now known as the 'oscillator method', and is based on measuring the reactivity of the nuclear reactor after several grams of uranium-233 is introduced into the core and its change is compensated for by boron. A D Galanin calculated the errors and the conditions under which this experiment should be run at the research reactor No. 7. It was found that precise knowledge of reactor parameters was not necessary for measuring the desired quantity. (This technique is also applicable to other fissile materials.)

The second important quantity is the number η of secondary neutrons per fission event in uranium-233. A I Alikhanov also suggested an experiment to measure this quantity. It is based on the following phenomenon.

"When a sample of uranium-233 is irradiated in the reactor, pure uranium-233 fissions into fission products but some of the uranium-233 captures a neutron and transforms into uranium-234. Calculations carried out by L L Gol'din showed that relatively small amounts of strongly irradiated uranium-233 (several hundred micrograms) can be analyzed through emission of α particles and the presence of uranium-234 in it can be established. The ratio of the number of α particles from uranium-233 to those from uranium-234 yields the coefficient of neutron poisoning without subse-

quent fission. The first experiment can provide the knowledge of ν, and the second — the relative undesirable absorption, after which the number of secondary neutrons per fission event in uranium-233 can be calculated from these data. This experiment requires developing an α-spectrometer with the strong magnetic field. The irradiation of uranium-233 specimens for 3 to 4 months was planned to be carried out in reactor 'A'. $\langle\ldots\rangle$

The third experiment which is also required for complementing our knowledge of the properties of uranium-233 and improving our knowledge of the properties of thorium represents a measurement of the neutron absorption cross section in uranium-233 and thorium as a function of neuron energy both in the range of thermal energies and in the resonance energy range. $\langle\ldots\rangle$

These measurements will be conducted on a crystal neutron spectrometer, using a neutron beam extracted from facility No. 7 through a special orifice in the outer protective shell and also through a graphite column.

Calculations aimed at designing the neutron spectrometer have been completed, the instrument was designed, and laboratory workshops will soon complete the spectrometer construction process. The instrument is extremely complicated both for manufacturing and for adjustment. Facility No. 7 incorporates for this purpose both the column and a special orifice for extracting neutrons from the reactor.

4. Fission of uranium-233 produces fission products which accumulate in the metal and may both enhance the neutron poisoning and, correspondingly, decrease the breeding ratio. Therefore, the number of fission products with high neutron absorption may affect both the breeding ratio and the time during which uranium-233 can be left in the reactor without removing fission products. The best known among neutron-absorbing fission products is xenon.

To clarify this issue, we saw at one time no other way but to implement an experimental unit charged with several hundred grams of uranium-233 and to directly measure the changes in the breeding ratio as a function of fission fragment accumulation.

However, it proved possible with the available small amounts of uranium-233 and uranium-235 to evaluate, at least roughly, using the method that I suggested, the relative number of Xe forming in uranium-233 relative to uranium-235. These experiments were carried out with a setup in Laboratory No. 2 and it was demonstrated that the number of Xe formed in uranium-233 is smaller than that in uranium-235. In all our evaluations of the breeding ratio, the number of Xe in uranium-233 was assumed equal to their number in uranium-235."

Among NTS documents of 25 February 1953 [23] we found a protocol (dated March 3, 1953) of the Commission composed of Alikhanov A I, Gurevich I I, Feinberg S M, Leipunsky A I, and Gladkov G A, which "considered on instructions from the NTS the experimental data on nuclear constants for uranium-233.

It was decided to suggest the following values of the constants:

1. Capture cross section in the range of thermal-energy neutrons

$\sigma_a = 577 \pm 5$ barn for $\sigma_b = 735$ barn.

Measurements at the LIPAN gave (report No.)

572 ± 7 b

and measurements at the TTL gave (report No. 536-50)

582 ± 7 b.

2. The number of secondary neutrons per captured neutron

$\nu_{\text{eff}} = 2.3 \pm 0.02$.

Measurements at the LIPAN gave (report No.)

$\nu_{\text{eff}} = 2.29 \pm 0.025$

and measurements at the TTL gave (report No. 206)

$\nu_{\text{eff}} = 2.31 \pm 0.03$.

3. The ratio of capture cross sections for epithermal neutrons to those of thermal neutrons

$$\frac{\sigma_e}{\sigma_{th}} \approx 2.5 - 3.5 \text{ for the energy range } 1-100 \text{ eV}.$$

Presented on the basis of reports of the LIP No. 2916, TTL No. 621 $\langle\ldots\rangle$ the number of secondary neutrons per captured epithermal neutron

$\nu_{\text{eff}} > 2.46 \pm 0.1$ according to the LIP report No. G435.

The fraction of delayed neutrons

55.6 s — 0.024

23.7 s — 0.021

5 s — 0.093

1.5 s — 0.082, TTL report No. 536-53."

(The report numbers were not indicated in the original document. — *G.V.K, V.N.K.*)

The above quotation shows that Alikhanov and physicists at Laboratory No. 3 understood very well the need to measure the main nuclear constants of thorium and uranium-233 for a reliable calculation of the reactor parameters and did everything possible to obtain them, which allowed them to create a constants database for the thorium regime at the beginning of the 1950s.

13.2 Study of the physicochemical properties of thorium under irradiation

Laboratory No. 3 formulated the following problems of research and technology for subsequent analysis:

1. The study of the mechanical properties, expansion coefficient, and heat conduction of thorium and its alloys with uranium (1.5%) and beryllium in the temperature range from 20 to 400 °C and at 500 – 1000 °C.

2. The study of the mechanical properties of thorium and its alloys with uranium and beryllium under the conditions of intense irradiation. As Alikhanov indicated in report [31], "this study can only be done with an experimental gas-cooled unit whose creation is proposed. Further arguments below prove that this aspect is of fundamental importance."

In accordance with the tasks put before Laboratory No. 3, numerous experimental studies of the behavior of thorium and its alloys under irradiation were conducted in it; their analysis is a subject for a separate publication.

13.3 Studies of corrosion properties of thorium and the problem of protective coating

Physics-based calculations indicated that using thorium slugs without aluminium envelopes allows considerable improvement in the characteristics of the nuclear reactor. The problem was therefore formulated of studying the corrosion behavior of thorium and its possible alloys in water. A I Alikhanov pointed out in his report the following [56]:

"I proposed one of the possible methods of increasing the corrosion resistance of thorium to water when discussing this problem with Prof. Sazhin. According to Giredmet data, the remelted metal is hardly solvable even in concentrated hot acids; hence, surface melting of fuel slugs through a small depth may greatly increase the thorium corrosion resistance.

At the moment, the work on corrosion resistance should be conducted not with pure thorium but with thorium – uranium and Be alloys, since such are the systems encountered in real conditions in a reactor with thorium. It is also necessary to begin, for gas-cooled systems, a study of the thorium corrosion in an inert gas flux."

We see from the above that the thorium – uranium (1.5%) – beryllium alloy was suggested as a fuel material for the thorium regime. The triple thorium – uranium – aluminium alloy was also studied at the same time. In the course of 1950, Laboratory No. 3 researchers B V Ershler and M A Anikina studied the corrosion resistance of this alloy with and without an aluminium envelope, because information about the proper quantity was lacking when the work was started. It was shown that the above alloy without the envelope is not corrosion-resistant: about 15 mg of thorium are transferred to water per month.

The leaders of Laboratory No. 3 perfectly understood that high corrosion resistance of thorium does not make the problem of protective coating less urgent and that uranium-233 and fission products may be washed into the cooling water off the fuel slug surface if the metal surface is unprotected. The report [56] pointed out:

"At the moment, thorium slugs are coated with aluminium cladding by a technique worked out for uranium. It should be noted here that this technique is better suited to thorium than to uranium. Indeed, damage of the aluminium cladding cannot result in the case of thorium in any serious negative consequences (as is the case with uranium), such as fuel slug swelling. This consideration should be checked on a real thorium slug by deliberately damaging the hermetic envelope. Unfortunately, aluminium itself is not regarded as an ideal corrosion-resistant material when exposed to water at high temperatures. In fact, raising the temperature is the only available option for using thorium in water-cooled reactors. We need to study the corrosion properties of aluminium and thorium experimentally at water temperatures of about 200 °C."

The following research works on thorium were performing at the IFKh AN SSSR in 1950 – 1951 according to the task orders of Laboratory No. 3 [56]:

1. Electrochemical investigation of corrosion of thorium and its alloys with uranium in light and heavy water under irradiation.

2. Investigation of the corrosion of thorium in water and its electrochemical behavior in aqueous solutions under irradiation.

This work showed that the rate of metal corrosion under conditions simulating the industrial environment is quite appreciable, so that using thorium slugs without cladding is out of the question.

3. Strengthening of passivating films on thorium and its alloy with uranium using heating in a vacuum.

4. Investigation of the growth kinetics of protective films on thorium at various oxygen pressures in the temperature range 900 – 1250 °C.

5. Investigation of the electrochemical behavior and passivation of thorium and its alloy with uranium.

The report [56] states:

"These studies were an attempt to develop a method of treating the thorium surface rendering the metal passive and noncorrodible under thorium production conditions. The work aimed at excluding the use of thorium slug cladding as such cladding degrades the characteristics of the reactor."

This study also led to the conclusion that thorium slugs cannot be used without protective cladding.

"6. Investigation of corrosion of alloys and aluminium-containing coatings in water.

7. Electrochemical behavior of tungsten in contact with aluminium.

8. Investigation of corrosion of aluminium and aluminium – magnesium alloy in contact with stainless steel.

9. Investigation of corrosion and electrochemical characteristics of thorium alloys with aluminium and aluminium cladding at a temperature of 200 °C."

The above results were employed in developing the hermetization technology for thorium slugs (carried out at the VIAM and NII-13). The technology from the NII-13, based on the diffusive adhesion between the aluminium cladding and thorium turned out preferable. Monitoring of the quality of physical contact using an ultrasound defectoscope gave a very satisfactory result, making it possible to recommend this technology for application in industrial production. In June 1951, Plant 'A' in Moscow began to utilize this technology for quantity production of thorium slugs.

It was no accident that B L Vannikov and I V Kurchatov remarked in their memorandum [57] on R&D results for the first half of 1950 that:

"4. Among the methods being developed for specimen coating for unit No. 7 (science supervisor Cde. Alikhanov A I) the method of NII-13 (Privalov V I, Pytlyak P P) successfully went through laboratory testing. Preparations are underway for testing specimens protected by this method in the working conditions" ('specimen' stands for a 'fuel slug' — *Translator*).

14. Design, commissioning, and operation of reactor No. 7

The industrial heavy-water reactor No. 7 with its maintenance systems was constructed inside a partly subterranean building with a relatively shallow basement level. The main element of the reactor was a hermetically sealed vessel made of aluminium alloy, 2.8 m in diameter and 3.4 m in height, with a protective top roof through which technological channels were installed and extracted, as well as fuel slugs loaded (see Fig. 1). Fuel slugs were unloaded downwards and subsequently transferred to the transport gallery for storage before relocation to the radiochemical plant. The complicating factor was the heavy water taken away with the fuel slugs. In view of this, the designer of the reactor (OKB-2 of Plant No. 92, now the I I Afrikantov OKBM) came up with an original construction of a hydraulic transportation system for transferring fuel slugs — it operated on heavy water and reduced to a minimum losses of heavy water during unloading. Fuel slugs were cooled by heavy water circulating in a closed circuit. The heated heavy water was cooled in heat exchangers with light water (distillate) of the second circuit, which in turn was losing its heat to water from a lake. In this manner, the heat transfer system of reactor No. 7 (OK-180) consisted of three circuits: two of them closed and one open, which excluded any possibility of radioactivity polluting the industrial-use lake. A radial graphite reflector was installed together with lateral biological shielding. Numerous systems of technological monitoring were also introduced.

On 4 November 1951, E P Slavsky, B G Muzrukov, A I Alikhanov, and G V Mishenkov sent Beria a memor-

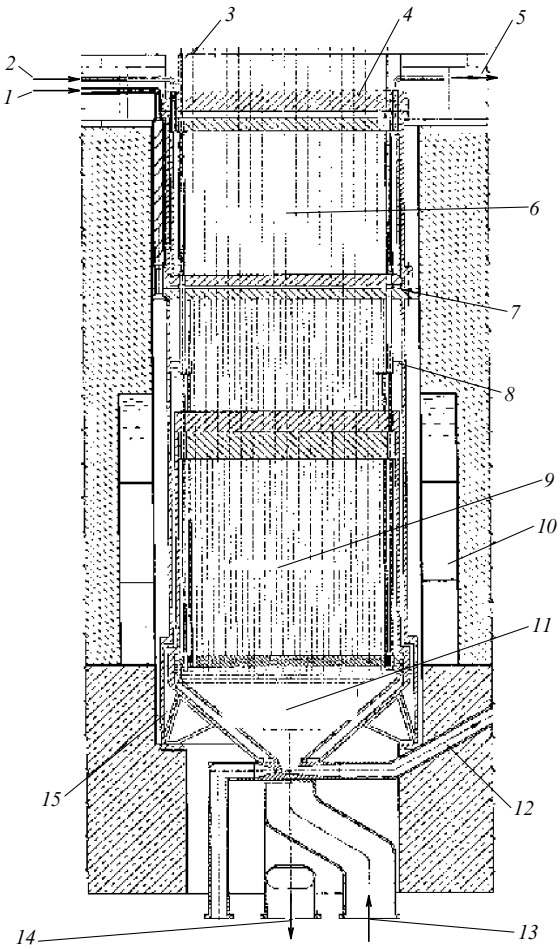

Figure 1. Heavy-water reactor of the OK-180/OK-190 type: *1* — input of 'dirty' gas, *2* — input of 'pure' gas, *3* — technological channels, *4* — reactor roof, *5* — output of 'pure' gas, *6* — top protection, *7* — hydraulic seal, *8* — level of heavy water, *9* — reactor core, *10* — protection water tanks, *11* — pressurized chamber, *12* — flow towards hydraulic transport system, *13* — coolant input, *14* — coolant output, *15* — draining chamber.

andum on the commissioning of reactor No. 7, in which they wrote [58]:

"Plant No. 3 was placed in operation on 18.10.1951 and has operated at rated capacity since 29.10.1951. The unit has functioned normally and quietly all this time.

Unit No. 7 has the following specific features as compared with 'A'-type units:

1. The total amount of metal loaded into this unit is 14.4 t as against 115 – 120 t in 'A'-type units of the same power.

Consequently, the thermal power density of the metal in unit No. 7 is 8.3 thousand kW/t, which is approximately 5.5 times greater than in unit 'A'.

Furthermore, heat removal from 1 square meter of fuel slug surface is 1,000,000 cal, which is much higher than the specific heat removal accepted for the technology of atomic and ordinary piles.

2. Unit No. 7 allows more efficient fissioning of uranium-235 from natural uranium, so that the specific consumption of uranium per ton of output product is lower than in 'A'-type units.

We expect that unit No. 7 can work on regenerate from 'A'-type units, while 'A'-type units cannot work in this way.

3. The project outline for unit No. 7 includes the possibility of working in other modes: production of uranium-233 or tritium using enriched metal."

The concluding part of the memorandum informed Beria of the situation with the personnel:

"Scientific leadership of the commissioning and operation during the initial period were provided by the highly skilled staff of Laboratory No. 3 headed by Academician Alikhanov A I: Vladimirsky V V, Nikitin S Ya, Galanin A D, Zinchenko A V, Burgov N A, Petrov P A and Gavrilov S A (Chief Engineer of unit No. 7). Comrades Alikhanov A I, Vladimirsky V V, Nikitin S Ya and Gavrilov S A were on round-the-clock duty as executive supervisors ever since the system was placed in service. ⟨...⟩

A group of highly skilled specialists from the Stalin Plant involving Cdes. Kaganov D V, Solonov V N (Chief Designer of unit), Smirnov M V, Shamatov V M, Lychev D V, Nikolaev N N (Chief of benchmark facilities), Makarov A I were present in the course of assembling and start-up operations. This group took active part in the installation and commissioning procedures and provided important help in overcoming major technical obstacles."

It was also mentioned at the end of the memorandum that all through 1952 the nuclear reactor would continue operating in the plutonium production regime on natural uranium loading, and would then be changed over to operating on enriched uranium to produce tritium or uranium-233.

Reactor No. 7 was initially commissioned in the plutonium production regime, as we read in the information sheet "On the current status of work on developing the atomic power industry" of 16 November 1952 [59]:

"Atomic plant with heavy water (15 t uranium and 37.4 t heavy water) was placed in operation at the enterprise No. 817 in October 1951.

The annual output of the plant is 28 kg of plutonium.

Using heavy water will make it possible to change over this plant to the regime of converting thorium to a new explosive — uranium-233.

Physicists calculated that the amount of uranium-233 loaded once into the reactors with thorium and heavy water would increase each year by 20%.

Processing of thorium will take place at the atomic plant in 1952, first on an experimental basis."

The information sheet concerning the production of uranium-233, signed by Director of the enterprise No. 817 B G Muzrukov and forwarded to B L Vannikov on 14 December 1953, is very demonstrative: it is documentary evidence of the implementation of the thorium regime at the industrial heavy-water reactor No. 7 (OK-180 of enterprise No. 817). We shall quote from this information sheet [60]:

"In compliance with the USSR CM Resolution No. 5851-rs of 8.4.1953, plant No. 3 was reconstructed during May – July 1953 in order to change over unit No. 7 to the production of uranium-233.

The industrial phase of production of uranium-233 in unit No. 7 was started in August 1953. ⟨...⟩

The experimental uranium-233-producing facility that was operating before August 1953 was used for the purpose of studying the relevant chemical technology and investigating the properties of uranium-233.

By 1.09.1953, a certain amount of uranium-233 was produced, including about 850 g of uranium-233 in the cooling pond and about 230 g in the form of metal produced with the experimental facility No. 5 at NII-9. ⟨...⟩

In addition to unit No. 7, uranium-233 can be additionally produced in 1955 also with unit No. 7A; in view of insufficient amounts of enriched metal, the first campaign of this unit is planned to be run on natural metal in the plutonium production regime.

The mean concentration of uranium-233 in irradiated thorium was assumed to be ≈ 1.6 kg/t. The content of uranium-233 can be increased by way of increasing the time of exposure in the unit, which will depend on the stability of thorium slugs and technological channels.

... In 1953, approximately 7.72 kg of uranium-233 will be accumulated and unloaded from the unit, and 20 kg in 1954.

... Given the radioactivity level, the reprocessing of irradiated thorium can be started only 12 months later — that is, from the first quarter of 1955.

... Uranium-233 in metallic form can be produced, taking into account the extraction factor of about 80%, in the following amounts: 6.2 kg in the first quarter of 1955, 8.0 kg in the third quarter of 1955, and 8.0 kg in the first quarter of 1956."

At the beginning of 1957, reactor No. 7 was changed over to the plutonium and later on the tritium regime, since uranium-233 was found to have no appreciable advantages in comparison with the weapons-grade plutonium and the atomic power industry was not yet ready for tackling the thorium – uranium-233 fuel cycle.

15. Prospects

In October 1953, I V Kurchatov sent a detailed letter to Minister of Medium Machine Building V A Malyshev on the thorium problem; its text has never previously been published [40]:

"Thorium in the atomic energy problem

At the moment, two approaches are open to obtaining atomic energy: approach one — fission of heavy elements, and approach two — fusion reactions involving light elements. Fission at neutron energies not higher than 2 – 3 MeV occurs only in two heavy elements found in nature — in uranium and thorium.

Natural uranium is a mixture of two isotopes — uranium-238 and uranium-235. Natural thorium has a single isotope Th-232. Uranium-238 and thorium undergo fission only through fast neutrons. Uranium-235 undergoes fission both through fast and thermal neutrons — this is why uranium was the first to find a wide application in the atomic energy area.

Large natural deposits of thorium and the relative ease in mining it made it attractive for use.

We have been conducting research works into the clarification of prospects and ways of applying thorium to generate atomic energy ever since 1945.

At the present moment, the following main conclusion can be made from the results of this work: we established that in principle thorium can be utilized both for the production of the fissile nuclear fuel — uranium-233, and for the generation of power.

Even though, in principle, the possibility of generating atomic power using only thorium is beyond doubt, the technical feasibility and economic wisdom of this path to obtaining atomic power have not been proved yet. On the contrary, the results of research and development efforts indicate that using uranium-238 for the same purpose may prove simpler and more expedient.

Thorium can be utilized in three main areas:

1. For generating uranium-233 as a nuclear explosive.

2. For uranium-233 breeding in the so-called thorium cycle.

3. For expanding the atomic power industry based on the thorium cycle.

1. Prospects for using uranium-233 as a nuclear explosive.

Uranium-233 is produced in atomic reactors which for this purpose are loaded with uranium enriched in the isotope U-235.

As uranium-235 burns, more neutrons are produced than required to sustain the chain reaction. Excess neutrons are absorbed by thorium-232 resided inside the atomic reactor and on its surface. As neutrons are captured by thorium, uranium-233 is produced. To produce one kilogram of uranium-233 we need to expend from one and a half to two kilograms of uranium-235. Greater consumption of uranium-235 in comparison with the produced amount of uranium-233 is explained by inevitable losses of part of the neutrons in the atomic reactor.

As we obtain less uranium-233 than the amount of uranium-235 we burn, and furthermore, uranium-233 must subsequently be chemically extracted from thorium, the resulting uranium-233 comes to be considerably more expensive than uranium-235, and comparable in cost with plutonium-239.

The employment of uranium-233 for atomic bomb designs developed by now offers no advantages in comparison with plutonium.

We can hypothesize that methods of using uranium-233 in special designs of atomic bombs may be found some day, in which it could have advantages over plutonium and uranium-235 but even then the required amounts of thorium mining would be quite low. If 500 kg of uranium-233 would be produced annually, the annual need for thorium would not exceed 25 t. This means that about 500 tonnes of thorium will take part in the process at any one time.

2. Uranium-233 breeding in the thorium cycle.

Reproduction of uranium-233 through breeding needs an atomic reactor with a loading of uranium-233 instead of enriched uranium. Inside this reactor, thorium is placed on the inner surface of the reactor. As uranium-233 burns, new quantities of uranium-233 can be accumulated in such a reactor through neutrons that are in excess of the amount required to sustain the chain process, as it is formed due to neutron capture by thorium.

Research work and calculations show a theoretical possibility not only of restoring the entire consumed amount of uranium-233 but also of increasing its amount while the initial load is being burnt. This process could be repeated many times. Slow and fast neutron reactors could be used for the breeding production of uranium-233.

The breeding cycle sensitively depends on the solution of a number of technical problems encountered when reducing deleterious loss of neutrons and the losses of uranium-233 during chemical processing.

Neutrons are lost through the following channels:

(a) loss of neutrons in construction materials of the atomic reactor — in the moderator, in pipes of technological channels and in fuel slug envelopes, and in the coolant;

(b) loss of fission neutrons through absorption by short-lived fission products, mostly by xenon and samarium;

(c) loss of neutrons through absorption by long-lived fission products that accumulate in the time taken by the initial batches of uranium-233 to burn.

Loss of uranium-233 in the chemical processing cycle has the following components:

(a) loss of uranium-233 when cleaning from fission fragments;

(b) loss of uranium-233 when extracting it from thorium.

Losses suffered in the production of uranium-233 may greatly reduce the breeding ratio compared to the above-given estimates of 10 – 30%.

The practically achievable breeding ratio can only be determined by constructing an experimental reactor and a chemical facility to purify uranium-233 from fission fragments. The Ministry of Medium Machine Building NTS considers it advisable to design such an experimental atomic reactor at the USSR Academy of Sciences TTL, using heavy water as the moderator.

3. Expanding the atomic power industry based on the thorium cycle.

The thorium cycle described in item 2 makes it possible to generate electric power, while ultimately using thorium alone.

In this case, it would be sufficient to have the breeding ratio of the atomic pile – chemical facility cycle equal to unity; this will definitely be achieved in the proposed TTL type of the atomic pile. In this scenario, the uranium-233 burnt in the atomic pile would be completely replaced by the new uranium-233 accumulated in thorium. The consumption of thorium for the generation of 1 billion kW h of electric power would probably come to about 1000 kg (the theoretical estimate is 200 kg).

To create such an atomic power-chemical facility, one would have to begin with accumulating enough uranium-233 for the initial loading into atomic reactors. The thermal power of thorium reactors required for electric power stations having a total power of 1 MW at 20% efficiency would be about 5 million kW.

The preliminary data available at the TTL indicate that the initial loading of uranium-233 in reactors of this power should come to about 2000 kg. If we change over our entire plutonium-generating industry to the production of uranium-233, accumulation of this amount of uranium-233 should take about 8 years. The cost of this initial loading of uranium-233 would be about 10 billion rubles.

This estimate shows that achieving any substantial scale in the atomic power industry based on the thorium cycle demands a great amount of time and the profitability of this solution remains questionable.

On the other hand, it should be noted that uranium reactors could be used both for electric power generation and for nuclear fuel breeding. Judging by the available R&D data, the uranium cycle of the atomic power industry appears so far simpler and more profitable. The atomic power industry has accumulated considerable amounts of uranium-238 waste, reaching more than 10,000 tonnes. This uranium waste can be used directly as raw material for the uranium cycle and should keep it well stocked for many years to come.

Summary

The following conclusions can be drawn from the above analysis:

1. Utilization of thorium for atomic power generation appears quite feasible.

2. The technical expediency and economic profitability of the wide-scale use of thorium remains questionable.

3. Even if new possibilities open up for more expedient application of thorium, the need for thorium is likely to grow quite slowly. The available stock of about 300 tonnes of thorium should sustain progress regarding the thorium issue, assuming the most favorable conditions, during the next five-year period.

4. To determine the realistic value of the breeding ratio in the thorium cycle, it is necessary to build, on the task orders from the TTL, an experimental reactor with a chemical facility.

Academician

17 October 1953."

Having read I V Kurchatov's memorandum, one notices that his attitude to the thorium problem changed to a more restrained form in comparison with the previous period, even though he concluded that it was necessary to continue working on it in order to prove "the technical expediency and economic profitability of the wide-scale use of thorium" in the atomic power industry.

In 1967, O S Lupandin, Deputy Head of the MMMB Scientific and Technical Department, sent his Minister E P Slavsky a long memorandum of 41 pages with proposals and the required supporting arguments in favor of the need to intensify work on the thorium problem [61]. In this letter he pointed out (we quote only selected passages):

"The memorandum reviews the current status of work on the study of the potential use of thorium in nuclear reactors in this country and abroad.

⟨...⟩

It has been calculated that a thorium nuclear reactor could be operated quite profitably at a uranium price reaching 88 US dollars/kg of U_3O_8 (at a fairly low additional cost of 0.035 c/kW h) even with the breeding ratio equal to 1, provided the cost of reprocessing and regeneration of fuel elements remains moderately low. ⟨...⟩

We already have sufficient quantities of nonirradiated and irradiated thorium for starting the experimental program: the storage facilities of the Ministry keep about 20 t of thorium (metal), 200 t of thorium oxalate and several dozen tonnes of irradiated thorium (in fuel slugs)."

The memorandum formulated numerous suggestions concerning the development of nuclear reactors that could operate in the thorium cycle. Alas, no extension of the work on the thorium problem took place; an analysis of why it did not is the subject of another paper.

16. Conclusion

The implementation of the thorium regime on an industrial scale at the enterprise No. 817 was something never before attempted in any country. Reactor No. 7 (OK-180) was operating in the thorium regime until 1 January 1956. As a result of its commissioning and its work in the thorium regime, valuable experience concerning the thorium-cycle heavy-water reactor was accumulated.

References

1. "Protocol No. 2 of the meeting of the Technical Council of the Special Committee of the USSR SovNarKom of 5, 6, 10, 16, 24 September 1945", in *Atomnyi Proekt SSSR. Dokumenty i Materialy* (The USSR Atomic Project. Documents and Materials) Vol. 2 *Atomnaya Bomba. 1945 – 1954* (Atomic Bomb. 1945 – 1954) Book 4 (Gen. Ed. L D Ryabev, composed by G A Goncharov) (Moscow: Fizmatlit – Sarov: RFYaTs-VNIIEF, 2003) pp. 11 – 16
2. "I.V. Kurchatov's report to I.V. Stalin on the current status of the work on using intranuclear energy of 12.2.1946", in *Atomnyi Proekt SSSR. Dokumenty i Materialy* (The USSR Atomic Project. Documents and Materials) Vol. 2 *Atomnaya Bomba. 1945 – 1954* (Atomic Bomb. 1945 – 1954) Book 2 (Gen. Ed. L D Ryabev, composed by G A Goncharov) (Moscow: Fizmatlit – Sarov: RFYaTs-VNIIEF, 2000) pp. 428 – 436
3. "I.V. Kurchatov's report on the main research, design and implementation work in connection with atomic energy, completed in 1947, February 1948", in *Atomnyi Proekt SSSR. Dokumenty i Materialy* (The USSR Atomic Project. Documents and Materials) Vol. 2 *Atomnaya Bomba. 1945 – 1954* (Atomic Bomb. 1945 – 1954) Book 3 (Gen. Ed. L D Ryabev, composed by G A Goncharov) (Moscow: Fizmatlit – Sarov: RFYaTs-VNIIEF, 2002) pp. 763 – 781
4. "Memorandum from I.V. Kurchatov, A.I. Alikhanov, A.P. Aleksandrov to L.P. Beria on the use of thorium of 27 October 1948", in *Atomnyi Proekt SSSR. Dokumenty i Materialy* (The USSR Atomic Project. Documents and Materials) Vol. 2 *Atomnaya Bomba. 1945 – 1954* (Atomic Bomb. 1945 – 1954) Book 4 (Gen. Ed. L D Ryabev, composed by G A Goncharov) (Moscow: Fizmatlit – Sarov: RFYaTs-VNIIEF, 2003) pp. 558– 560
5. "Protocol No. 3 of the meeting of the Technical Council of the Special Committee of the USSR SovNarKom of 8 October 1945 ", in *Atomnyi Proekt SSSR. Dokumenty i Materialy* (The USSR Atomic Project. Documents and Materials) Vol. 2 *Atomnaya Bomba. 1945 – 1954* (Atomic Bomb. 1945 – 1954) Book 4 (Gen. Ed. L D Ryabev, composed by G A Goncharov) (Moscow: Fizmatlit – Sarov: RFYaTs-VNIIEF, 2003) pp. 17 – 20
6. "Resolution of the USSR SNK No. 3010-895ts "On the organization of Laboratory No. 3 of the USSR Academy of Sciences" of 1.12.1945", in *Atomnyi Proekt SSSR. Dokumenty i Materialy* (The USSR Atomic Project. Documents and Materials) Vol. 2 *Atomnaya Bomba. 1945 – 1954* (Atomic Bomb. 1945 – 1954) Book 3 (Gen. Ed. L D Ryabev, composed by G A Goncharov) (Moscow: Fizmatlit – Sarov: RFYaTs-VNIIEF, 2002) pp. 74 – 77
7. "Information sheet on NTS discussions of aspects of the selenium problem", Rosatom Archive f. 2, delo 50376, mb. T-140sd of 5.03.1953, pp. 17 – 23
8. "Protocol No. 7 of the PGU NTS meeting of 13.5.1946", Rosatom Archive f. 2, op. 2, delo 7
9. "Resolution of the USSR CM No. 3430-1125ts/sd "On the construction of facility No. 7 of Laboratory No. 3 of the USSR Academy of Sciences and on designing reactor No. 7 of 30.9.1947", in *Atomnyi Proekt SSSR. Dokumenty i Materialy* (The USSR Atomic Project. Documents and Materials) Vol. 2 *Atomnaya Bomba. 1945 – 1954* (Atomic Bomb. 1945 – 1954) Book 3 (Gen. Ed. L D Ryabev, composed by G A Goncharov) (Moscow: Fizmatlit – Sarov: RFYaTs-VNIIEF, 2002) pp. 333 – 337
10. "Resolution of the USSR CM No. 1127-402ts/sd "On the plan of special research work for 1948 ", "Plan of new special research and design works for 1948" of 6.04.1948", in *Atomnyi Proekt SSSR. Dokumenty i Materialy* (The USSR Atomic Project. Documents and Materials) Vol. 2 *Atomnaya Bomba. 1945 – 1954* (Atomic Bomb. 1945 – 1954) Book 3 (Gen. Ed. L D Ryabev, composed by G A Goncharov) (Moscow: Fizmatlit – Sarov: RFYaTs-VNIIEF, 2002) pp. 431 – 454
11. "FMD: Report on executing the R&D plan for 1948 ", Rosatom Archive, f. 2, delo 58374
12. "Protocol No. 117 of the PGU NTS meeting of 24.5.1948", Rosatom Archive, f. 2, op. 2, delo 117
13. "Protocol No. 125 of the PGU NTS meeting of 9.8.1948 ", Rosatom Archive, f. 2, op. 2, delo 126
14. "A.I. Alikhanov's report to PGU NTS Section No. 1 "On the selection of building site and characteristics of unit No. 7" and the resolution of NTS Section No. 1"(in Protocol No. 133 of the PGU NTS meeting of 15.11.1948)
15. "Protocol No. 133 of the PGU NTS meeting of 15.11.1948", Rosatom Archive f. 2, op. 2, delo 133
16. "Letter from I.V. Kurchatov to L.P. Beria on heavy-water reactors of 4.11.1948 ", in *Atomnyi Proekt SSSR. Dokumenty i Materialy* (The USSR Atomic Project. Documents and Materials) Vol. 2 *Atomnaya Bomba. 1945 – 1954* (Atomic Bomb. 1945 – 1954) Book 4 (Gen. Ed. L D Ryabev, composed by G A Goncharov) (Moscow: Fizmatlit – Sarov: RFYaTs-VNIIEF, 2003) pp. 554-557
17. "Letter from I.V. Kurchatov to M.G. Pervukhin concerning the construction of the atomic heavy-water reactor (manuscript)", iskh. no. 37sd of 14.11.48 (in Protocol No. 133 of the PGU NTS meeting of 15.11.1948)
18. "Letter from B.L. Vannikov, A.P. Zavenyagin, I.V. Kurchatov, E.P. Slavsky, N.I. Pavlov to L.P. Beria on converting plants No. 3 and No. 5 of enterprise No. 817 to tritium production of 12.04.1952", iskh. no. 677/1sd, Rosatom Archive f. 2, op. 18, delo 13, pp. 6-9
19. "Letter from B.L. Vannikov, A.P. Zavenyagin, I.V. Kurchatov, E.P. Slavsky, N.I. Pavlov to L.P. Beria on converting plant No. 3 of enterprise No. 817 to selenium production of 6.05.1952", iskh. no. 832/1sd, Rosatom Archive f. 2, op. 18, delo 13, pp. 16 – 18
20. "Resolution of the USSR CM No. 2307-878ts/sd "On the conversion of plant No. 3 of enterprise No. 817 to selenium-77 production" of 16.05.1952 ", in *Atomnyi Proekt SSSR. Dokumenty i Materialy* (The USSR Atomic Project. Documents and Materials) Vol. 2 *Atomnaya Bomba. 1945 – 1954* (Atomic Bomb. 1945 – 1954) Book 5 (Gen. Ed. L D Ryabev, composed by G A Goncharov) (Moscow: Fizmatlit – Sarov: RFYaTs-VNIIEF, 2005) p. 436
21. "Resolution of the USSR CM No. 3976-1584ts/sd "On the construction of the second crystallizer with condensate at the enterprise No. 817 of First Main Directorate of the USSR Council of Ministers" of 2.09.1952", in *Atomnyi Proekt SSSR. Dokumenty i Materialy* (The USSR Atomic Project. Documents and Materials) Vol. 2 *Atomnaya Bomba. 1945 – 1954* (Atomic Bomb. 1945 – 1954) Book 5 (Gen. Ed. L D Ryabev, composed by G A Goncharov) (Moscow: Fizmatlit – Sarov: RFYaTs-VNIIEF, 2005) pp. 473 – 474
22. "E.P. Slavsky, A.I. Alikhanov: Memorandum to L.P. Beria on the selenium problem", iskh. no. 2216/ts-sd of 12.12.1952, Rosatom Archive, f. 2, delo 58307
23. "Protocol No. N-2 of the PGU NTS meeting of 25.02.1953", Rosatom Archive, f. 2, op. 9, delo 40
24. "Order of the USSR CM No. 5851-rs "On the reconstruction of plant No. 3 of enterprise No. 817 of 8.04.1953 ", in *Atomnyi Proekt SSSR. Dokumenty i Materialy* (The USSR Atomic Project. Documents and Materials) Vol. 2 *Atomnaya Bomba. 1945 – 1954* (Atomic Bomb. 1945 – 1954) Book 5 (Gen. Ed. L D Ryabev, composed by G A Goncharov) (Moscow: Fizmatlit – Sarov: RFYaTs-VNIIEF, 2005) pp. 536 – 537
25. "Memorandum of A.I. Alikhanov and M.A. Andreev "On the current status of work on organizing Laboratory No. 3 of the USSR Academy of Sciences" of 15.5.1946", in *Atomnyi Proekt SSSR. Dokumenty i Materialy* (The USSR Atomic Project. Documents and Materials) Vol. 2 *Atomnaya Bomba. 1945 – 1954* (Atomic Bomb. 1945 – 1954) Book 2 (Gen. Ed. L D Ryabev, composed by G A Goncharov) (Moscow: Fizmatlit – Sarov: RFYaTs-VNIIEF, 2000) pp. 509 – 511
26. "Report of Academician L.D. Landau at a meeting of the PGU NTS of 10.2.1947 "On the work in theoretical physics", Rosatom Archive f. 2, opis 2, delo 61
27. "Letter from A.I. Alikhanov to B.S. Pozdnyakov on using B-9", iskh. no. 449ts/sd of 5.05.1947, ITEP Archive f. 1, op. 1s/nt, delo 2 (declassified)
28. Vernadsky V I "4. Thorium in Earth crust", in *Biblioteka Trudov Akademika V.I. Vernadskogo* (Library of Works of Academician V.I. Vernadsky) (Editor-in-Chief A L Yanshin) *Trudy po Geokhimii* (Works on Geochemistry) (Executive Ed. A A Yaroshevskii) (Moscow: Nauka, 1994) pp. 371 – 374
29. "A.I. Alikhanov's report on the work of Laboratory No. 3", in *Atomnyi Proekt SSSR. Dokumenty i Materialy* (The USSR Atomic Project. Documents and Materials) Vol. 2 *Atomnaya Bomba. 1945 – 1954* (Atomic Bomb. 1945 – 1954) Book 4 (Gen. Ed. L D Ryabev,

composed by G A Goncharov) (Moscow: Fizmatlit – Sarov: RFYaTs-VNIIEF, 2003) pp. 467 – 470
30. "A.I. Alikhanov: Brief report on the current status of work on B-9", ITEP Archive f. 1, opis ls/nt, delo 22, iskh. no. 249ts/sd of 9.12.1948 (declassified)
31. "B.L. Ioffe, A.P. Rudik, A.S. Kronrod et al. Report "Production of uranium-233 with unit No. 7 working on 2% enriched uranium", 1952, ITEP Archive f. 1, opis 1s/nt, delo 103 (declassified)
32. "B.L. Ioffe, A.P. Rudik, A.S. Kronrod et al. Report "Design calculations for the apparatus producing uranium-233", 1952, ITEP Archive f. 1, opis ls/nt, delo 97 (declassified)
33. Galanin A D "Design calculations for the apparatus producing uranium-233", 1952, ITEP Archive f. 1, opis ls/nt, delo 97 (declassified)
34. "Protocol No. N-3 of the PGU NTS meeting of 25.03.1953", Rosatom Archive f. 2, op. 9, delo 39
35. Khristenko P I "Additional design calculations for gas-cooled reactors", 1949, ITEP Archive f. 1, opis 1s/nt, delo 15; "GSPI-11. Brief comments on the functioning of gas-cooled units with thorium", 1950, ITEP Archive f. 1, opis ls/nt, delo 70 (declassified)
36. Khristenko P I "Main principles of construction of thermal electric power stations utilizing the waste heat from a gas-cooled unit", 1950, ITEP Archive f. 1, opis ls/nt, delo 79 (declassified)
37. Khristenko P I Report "Helium-cooling of heavy-water unit (design principles and design calculation methods)", 1950, ITEP Archive f. 1, opis ls/nt, delo 78 (declassified)
38. "GSPI-11. Draft project of a heavy water-cooled unit of the thorium – uranium-235 or thorium – uranium-233 system with uranium-233 breeding and of 1 mln. kW in power", 1950, ITEP Archive f. 1, opis ls/nt, delo 72 (declassified)
39. "Information sheet on product cost (not later than 26.03.1951)", in *Atomnyi Proekt SSSR. Dokumenty i Materialy* (The USSR Atomic Project. Documents and Materials) Vol. 2 *Atomnaya Bomba. 1945 – 1954* (Atomic Bomb. 1945 – 1954) Book 5 (Gen. Ed. L D Ryabev, composed by G A Goncharov) (Moscow: Fizmatlit – Sarov: RFYaTs-VNIIEF, 2005) p. 660
40. "I.V. Kurchatov to V.A. Malyshev. Thorium in atomic energy problem", Rosatom Archive f. 2, delo 50381, iskh. no. 343ts/sd of 19.10.1953, pp. 91 – 98
41. Alikhanov A I "Report on new types of power crystallizers", iskh. no. 5ts/sd of 13.01.1954, Rosatom Archive f. 2, delo 50381, pp. 1 – 28
42. Alikhanov A I "Technical task orders for homogeneous and heterogeneous reactors", iskh. no. 13ts/sd of 22.01.1954, Rosatom Archive f. 2, delo 61657, pp. 60 – 70
43. "Letter from V.V. Vladimirsky to B.S. Emel'yanov listing first-priority scientific and technical tasks in the homogeneous reactor problem", iskh. no. 67ts/sd of 30.30.1953, Rosatom Archive f. 2, delo 50381, pp. 78 – 91
44. "Protocol of the meeting of the MMMB NTS 1 Section No. 1 of 4.08.1954", Rosatom Archive f. 2, delo 70039
45. "Letter from E.P. Slavsky to V.D. Maksimenko on elaboration of the draft technical project of power-generating homogeneous reactor", iskh. no. EN-49/sd of 12.04.1954, Rosatom Archive f. 2, delo 61661, p. 34
46. "B.S. Pozdnyakov to V.A. Malyshev: Memorandum on power-generating facilities", iskh. no. EN-164/2sd of 5.11.1953, Rosatom Archive f. 2, delo 50381, pp. 41 – 45
47. "Conclusions of the Commission of the NTS 1 Section No. 1 on the types of heat exchangers for elaboration of project task orders for electric high-power stations"(in Protocol S 1 NTS 120 of 25.03.1954), Rosatom Archive f. 2, delo 70039
48. "Letter from L.P. Beria, N.A. Voznesensky, G.M. Malenkov, M.G. Pervukhin, I.V. Kurchatov, A.P. Zavenyagin to I.V. Stalin "On the plan of special projects for 1947" of 20.02.1947", in *Atomnyi Proekt SSSR. Dokumenty i Materialy* (The USSR Atomic Project. Documents and Materials) Vol. 2 *Atomnaya Bomba. 1945 – 1954* (Atomic Bomb. 1945 – 1954) Book 3 (Gen. Ed. L D Ryabev, composed by G A Goncharov) (Moscow: Fizmatlit – Sarov: RFYaTs-VNIIEF, 2002) pp. 130 – 131
49. "Resolution of the USSR CM No. 340-150ts "On the plan of special projects for 1947" of 1.03.1947", in *Atomnyi Proekt SSSR. Dokumenty i Materialy* (The USSR Atomic Project. Documents and Materials) Vol. 2 *Atomnaya Bomba. 1945 – 1954* (Atomic Bomb. 1945 – 1954) Book 3 (Gen. Ed. L D Ryabev, composed by G A Goncharov) (Moscow: Fizmatlit – Sarov: RFYaTs-VNIIEF, 2002) pp. 132 – 140
50. "Resolution of the USSR CM No. 384-156ts/sd "On the plan of production of special items for 1947" of 1.03.1947", in *Atomnyi Proekt SSSR. Dokumenty i Materialy* (The USSR Atomic Project. Documents and Materials) Vol. 2 *Atomnaya Bomba. 1945 – 1954* (Atomic Bomb. 1945 – 1954) Book 3 (Gen. Ed. L D Ryabev, composed by G A Goncharov) (Moscow: Fizmatlit – Sarov: RFYaTs-VNIIEF, 2002) pp. 141 – 143
51. "Resolution of the USSR CM No. 2431-745ts "On geological prospecting and exploration for AZh-9 and BZh-9 in 1947" of 7.07.1947", in *Atomnyi Proekt SSSR. Dokumenty i Materialy* (The USSR Atomic Project. Documents and Materials) Vol. 2 *Atomnaya Bomba. 1945 – 1954* (Atomic Bomb. 1945 – 1954) Book 2 (Gen. Ed. L D Ryabev, composed by G A Goncharov) (Moscow: Fizmatlit – Sarov: RFYaTs-VNIIEF, 2002) pp. 247 – 253; "Order of the USSR CM No. 10951-rs "On measures to sustain mining for monacite in Aldan region" of 14.08.1947", p. 280; "Resolution of the USSR CM No. 3436-1129ts "On approval of project task orders of plants for mining and production of BZh-9" of 30.09.1947", pp. 341 – 342; "Resolution of the USSR CM No. 4059-1393ts/sd "On measures to organize mining for thorium, niobium and other rare metals at the Lovozerskoe deposit" of 16.12.1947", p. 376; "Order of the USSR CM No. 18748-rs "On organizing mining operations on monacite alluvial deposits at the Northern Deposit of the Azov Sea and on establishing the Mining Administration of the USSR Ministry of Nonferrous Metal Industry" of 17.12.1947", pp. 381 – 382
52. "Letter from B.L. Vannikov to I.V. Stalin presenting to his approval a draft resolution of the USSR CM "On the construction of the plant '2A' of the Ministry of Nonferrous Metal Industry", ibid., sheet 325; "Resolution of the USSR CM No. 3434-1127ts "On the construction of the plant '2A' of the Ministry of Nonferrous Metal Industry" of 30.09.1947", in *Atomnyi Proekt SSSR. Dokumenty i Materialy* (The USSR Atomic Project. Documents and Materials) Vol. 2 *Atomnaya Bomba. 1945 – 1954* (Atomic Bomb. 1945 – 1954) Book 2 (Gen. Ed. L D Ryabev, composed by G A Goncharov) (Moscow: Fizmatlit – Sarov: RFYaTs-VNIIEF, 2002) pp. 339 – 340
53. "Report of the USSR Ministry of Nonferrous Metal Industry to the Special Committee on the current status of special works", of 3.09.1947", in *The USSR Atomic Project. Documents and Materials* Vol. 2 *Atomnaya Bomba. 1945 – 1954* (Atomic Bomb. 1945 – 1954) Book 2 (Gen. Ed L D Ryabev, composed by G A Goncharov) (Moscow: Fizmatlit – Sarov: RFYaTs-VNIIEF, 2002) pp. 700 – 709
54. "Resolution of the USSR CM No. 392-148ts "On geological prospecting and exploration for A-9 and B-9 in 1948" of 22.12.1948", in *Atomnyi Proekt SSSR. Dokumenty i Materialy* (The USSR Atomic Project. Documents and Materials) Vol. 2 *Atomnaya Bomba. 1945 – 1954* (Atomic Bomb. 1945 – 1954) Book 2 (Gen. Ed. L D Ryabev, composed by G A Goncharov) (Moscow: Fizmatlit – Sarov: RFYaTs-VNIIEF, 2002) pp. 404 – 412
55. "P.Ya. Antropov: Summarizing information sheet on thorium deposit reserves, mined thorium concentrates, production of thorium salts and metallic thorium", of 25.03.1951", in *The USSR Atomic Project. Documents and Materials* Vol. 2 *Atomnaya Bomba. 1945 – 1954* (Atomic Bomb. 1945 – 1954) Book 5 (Gen. Ed. L D Ryabev, composed by G A Goncharov) (Moscow: Fizmatlit – Sarov: RFYaTs-VNIIEF, 2005) p. 658
56. "A.I. Alikhanov: Report on the work of the TTL in 1950 – 1951, part 1: Work on industrial units No. 7 and No. 7a and unit KS", ITEP Archive f. 1, op. ls/nt, delo 61 (declassified)
57. "Memorandum from B.L. Vannikov and I.V. Kurchatov to L.P. Beria "On the results of research, design and experimental work of First Main Directorate of the USSR Council of Ministers in the first half of 1950" of 2.09.1950", in *Atomnyi Proekt SSSR. Dokumenty i Materialy* (The USSR Atomic Project. Documents and Materials) Vol. 2 *Atomnaya Bomba. 1945 – 1954* (Atomic Bomb. 1945 – 1954) Book 3 (Gen. Ed. L D Ryabev, composed by G A Goncharov) (Moscow: Fizmatlit – Sarov: RFYaTs-VNIIEF, 2002) pp. 621 – 626
58. "Memorandum from E.P. Slavsky, B.G. Muzrukov, A.I. Alikhanov, G V Mishenkov to L.P. Beria on placing plant No. 3 in

operation'', iskh. no. 1083sd of 4.11.51, Rosatom Archive f. 24, delo 61416, pp. 76 – 82

59. ''Information sheet ''On the current status of work on developing the atomic power industry'', not earlier than 16.11.1952'', in *Atomnyi Proekt SSSR. Dokumenty i Materialy* (The USSR Atomic Project. Documents and Materials) Vol. 2 *Atomnaya Bomba. 1945 – 1954* (Atomic Bomb. 1945 – 1954) Book 5 (Gen. Ed. L D Ryabev, composed by G A Goncharov) (Moscow: Fizmatlit – Sarov: RFYaTs-VNIIEF, 2005) pp. 713 – 720
60. ''Information sheet from B.G. Muzrukov to B.L. Vannikov ''On the production of selenium-77'', iskh. no. KhM-720Ats/sd of 14.12.1953, Rosatom Archive f. 24. op. 18, delo 13, pp. 66 – 71
61. ''O.S. Lupandin to E.P. Slavsky: ''Proposals concerning the thorium problem'', iskh. no. EN-747ts of 25.2.1967, Rosatom Archive f. 2. op. 24v, delo 191