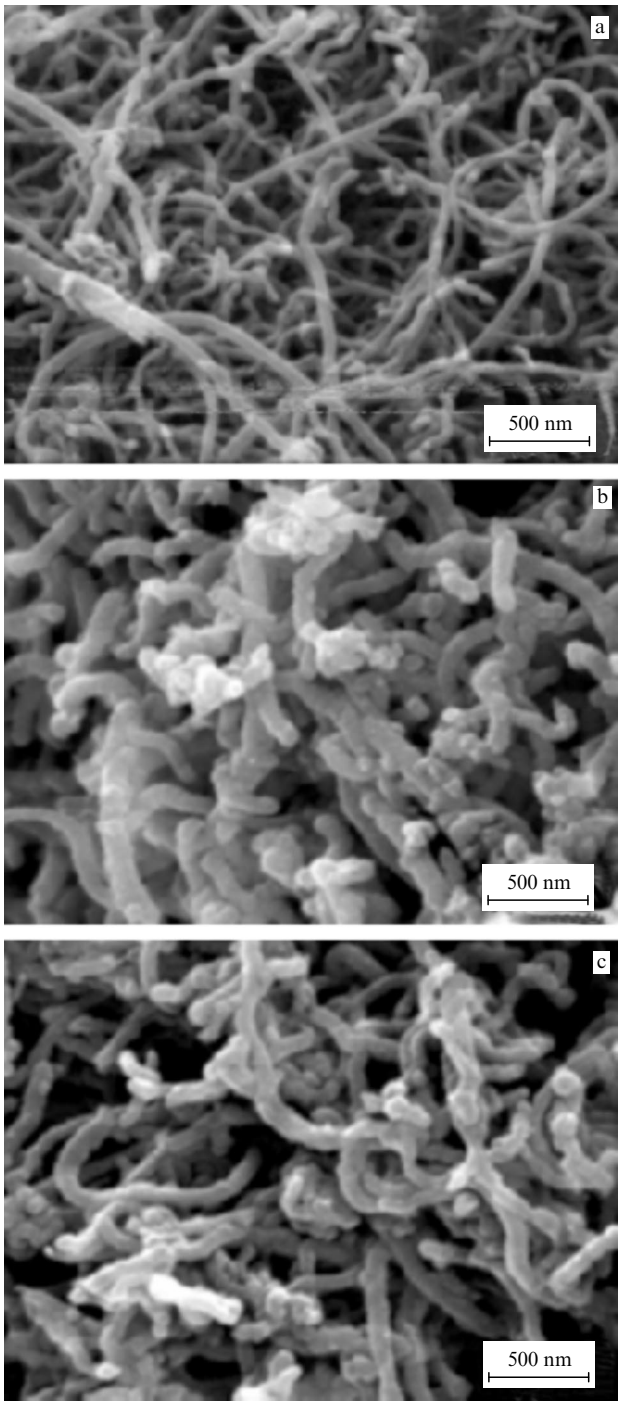

Figure 7. Original carbon nanotubes (a); nanotubes covered with polyaniline (b and c) with 70 and 90 wt.% of polyaniline, respectively.

the fuel for these cells. Due to its high energy content, the most widely used fuel for portable solid-polymer fuel cells — methanol — has many essential drawbacks, which forces researchers to look for substitutes [9].

Among the most important difficulties in developing new fuel cells is the problem of matching their elements that are fabricated in different technological processes, say, matching the solid-polymer membrane with electrodes fabricated from a porous inorganic material.

Nevertheless, all research, including the development of our basic micro- and nanotechnologies described in this report, some of which are already among the best in the world,[4] suggests that the problem of developing efficient portable fuel cells on the whole will be solved.

References

1. Larminie J, Dicks A *Fuel Cell Systems Explained* 2nd ed. (Chichester, WS: J. Wiley, 2003)
2. Kozhevin V M et al. *Dokl. Ross. Akad. Nauk* **387** 785 (2002) [*Dokl. Phys. Chem.* **387** 324 (2002)]
3. Landau L D, Lifshitz E M *Elektrodinamika Sploshnykh Sred* (Electrodynamics of Continuous Media) (Moscow: Gostekhizdat, 1957) [Translated into English (Oxford: Pergamon Press, 1960)]
4. Kozhevin V M et al. *J. Vac. Sci. Technol. B* **18** 1402 (2000)
5. Astrova E V et al. *J. Micromech. Microeng.* **14** 1022 (2004)
6. Vyatkin A et al. *J. Electrochem. Soc.* **149** G70 (2002)
7. Astrova E V et al., in *Mezhdunar. Forum "Vodorodnye Tekhnologii dlya Proizvodstva Energii", Moskva, 2005* (Intern. Forum "Hydrogen Technologies in Energy Production", Moscow, 2005) Abstracts (Moscow, 2006) p. 188
8. Kompan M E, Sapurina I Yu, Stejskal J, in *I Rossiiskaya Konf. po Fizicheskim Problemam Vodorodnoi Energetiki, Sankt-Peterburg, 2004* (1st Russian Conf. on Physical Problems in Hydrogen Power Engineering, St.-Petersburg, 2004) Abstracts (St.-Petersburg, 2004) p. 23
9. Goryachev D N, Malyshkin V G, Zabrodskii A G, in *Mezhdunar. Forum "Vodorodnye Tekhnologii dlya Proizvodstva Energii", Moskva, 2005* (Intern. Forum "Hydrogen Technologies in Energy Production", Moscow, 2005) Abstracts (Moscow, 2006) p. 147

PACS numbers: **28.70.+y**, **47.40.–x**, **62.50.+p**
DOI: 10.1070/PU2006v049n04ABEH005958

Physics research during nuclear explosions

E N Avrorin, V A Simonenko, L I Shibarshov

1. Introduction

Possibly no other engineering or technical endeavors of humankind have involved as much science as nuclear explosives have. The development of atomic and hydrogen bombs has required integrating knowledge from a wide circle of scientific fields and demanded huge technical and material resources — while, on the other hand, stimulating research into physical processes occurring under conditions beyond the reach of laboratory experiments.

Nuclear explosions produce pressures of up to several billion atmospheres and temperatures of up to hundreds of millions of degrees; they emit intense radiation — electromagnetic waves ranging from radio waves to hard gamma rays, and neutron fluxes in the energy range from fractions of an electron-volt to dozens of megaelectron-volts, and they involve a variety of physical processes, including shock and detonation waves, cumulation, turbulence, phase transformations, radiative energy transfer, dissociation and ionization, as well as fission and fusion nuclear reactions.

Given all this, nuclear explosions offer a unique set of fundamental and applied research opportunities — some of which unfortunately have been left unaddressed.

Listed below are research areas where much effort has been spent and good progress made.

(1) Thermodynamic properties of substances, equations of state, and phase transformations.

[4] For instance, the results achieved in research on monodispersed catalysts seem to be unique.

(2) Measurement of opacities (integral and spectral) of dense plasma.

(3) Thermonuclear burning and detonation processes.

(4) Electromagnetic radiation accompanying nuclear explosions.

(5) Radiation damage effects in materials and technological elements.

(6) Production of far transuranium elements.

(7) Neutron cross section measurements.

(8) Development of high-power optical and X-ray lasers.

Both in the USSR and in the USA, these studies were conducted in specially designed experiments using nuclear explosions, but also in passing with tests of explosive devices or with peaceful applications of nuclear explosions.

In the USSR, two nuclear research centers currently known as the Russian Federal Nuclear Center 'All-Russia Research Institute of Experimental Physics' (VNIIEF) in Sarov, and the RFYaTs 'E I Zababakhin All-Russia Research Institute of Technical Physics' (VNIITF) in Snezhinsk dominated most of the field. Along with these, some other institutes, both industrial and academic, contributed significantly to a number of research projects, and mention should also be made of the numerous organizations and bodies — not least the test site services — that helped in preparing and carrying out the explosions.

2. Radiation length measurements: the first physics-oriented experiment (1957)

At certain stages of a nuclear explosion, the predominant mechanism of energy transfer is a radiative heat conductivity. The importance of this radiative transfer mechanism first became clear with respect to stars, and the meaningful theoretical insights into this process were obtained in the 1930s. The vast majority of stellar objects are predominantly composed of elements with low atomic numbers. The main interaction mechanisms between radiation quanta and matter are bremsstrahlung interactions and Compton scattering.

Nuclear explosions give rise to energy densities comparable to those characteristic of stellar objects. What complicates things, however, is that nuclear explosives contain elements with high atomic numbers, which have highly complicated energy spectra and are multiply ionized at high temperatures — a situation in which radiative transitions between excited states and ionization processes start to significantly affect the way radiation and matter interact. Besides, the set — and state — of particle energy levels are significantly influenced by the thermodynamic conditions. Obtaining data on all these aspects is a daunting task even today — and in times past, in addition, it was not even known whether or how much the particular processes involved really matter. As things stood, however, there was indirect evidence from tests on even the first radiation implosion systems which cast doubts on the radiation transport data of the time.

Accordingly, obtaining experimental information on the radiation lengths in high-Z media became a top agenda issue in the 1950s. To this end, a physical experiment, known by its Russian abbreviation as FO-1 and involving a full-scale nuclear explosion, was prepared and carried out in 1956 on the initiative of the VNIIEF scientific leaders Ya B Zel'dovich, A D Sakharov, and Yu B Khariton. However, because of a methodical shortcoming — an inadequate accounting for radiation effects on the instrumentation — no useful information was obtained. In 1957, a team of young researchers at VNIITF, the USSR's second nuclear research center, set out to conduct a similar experiment (FO-3). Figure 1 depicts the schematic setup of the VNIITF experiment (the height of the apparatus was about 5 m, and the lateral dimension was about 2 m).

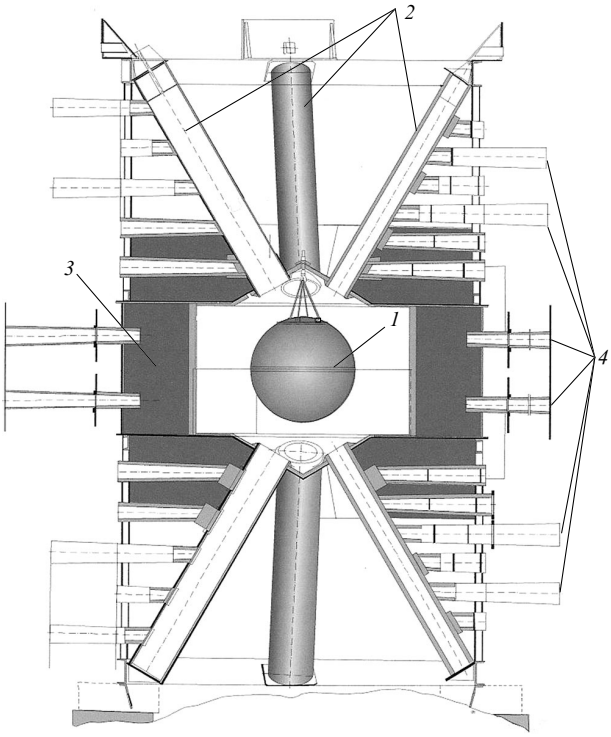

Figure 1. Schematics of the FO-3 setup, showing the explosive device (*1*), the radiation withdrawal pipes (*2*), the water tank (*3*), and the light channels (*4*).

Key FO-3 participants were:

Idea: Zel'dovich, Sakharov.

Initiative for the experiment: K I Shchelkin, E I Zababakhin, Yu A Romanov, V S Imshennik.

Scientific leadership: Yu A Romanov.

Physical design of the experiment, theory and calculations, result processing: E N Avrorin.

Engineering: V F Grechishnikov, V D Kiryushkin, A S Krasavin.

Physical measurements: A D Zakharenkov, V K Orlov, A S Dubovik, P V Kevlishvili.

Test site experiment supervision: V Yu Gavrilov.

The idea behind the FO-3 experiment was that the energy flux attenuation along a pipe depends on the heat conductivity in the pipe walls: the higher it is, the faster the energy flux attenuates. The energy absorption in various sections of the pipe wall was determined with the help of the shock wave velocity measurements in the experimental elements mounted there, by means of a light flash registering at the moment of the wave exit to the element's outer surface. Based on lessons from FO-1 experiment, the reliability of measurements was given a high priority. The process of choosing a reliable configuration of the experiment greatly benefited from the help of Zel'dovich. The optical radiation detection system was located at a distance of 2 to 5 km and involved high-speed moving-image cameras developed at the Institute of Chemical Physics, AS USSR. Examples of the photochronograms obtained are given in Fig. 2.

The large body of FO-3 experimental evidence, together with test data from a number of thermonuclear explosions as

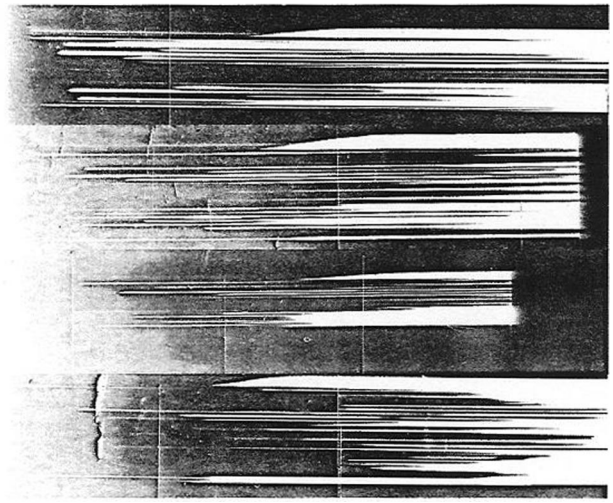

Figure 2. Examples of FO-3 photochronograms. Scale ~ 40 ns to the millimeter of the film.

processed by M P Shumaev, landed support to the view that the effect of the bound – bound transitions must indeed be taken into account.

The experimental results stimulated rapid development of quantum-mechanical models for calculating the opacity of materials. The major contributors to the theoretical development of the field were Zel'dovich and Yu N Babaev. The task of practically realizing theoretical models and computational algorithms and that of accumulating calculation data were given to A F Nikiforov and V B Uvarov's team at the Institute of Applied Mathematics, AS USSR [1].

3. Equations of state and phase transformations in dynamically loaded materials

The study of the properties of matter in dynamic processes under record-high pressures (up to 3.6 Gbar) was included in the program of a large number of specialized physical experiments and nuclear explosion tests [2, 3]. The property which proved the simplest to study, viz. shock compressibility, was measured using the reflection method, which had been developed by L V Al'tshuler, K K Krupnikov, et al. [4, 5] for experiments with chemical explosives and which assumes the knowledge of the equation of state for a reference material (usually Fe or Al).

The first large-scale on-site experiment involving such measurements was conducted by the VNIITF team in March 1966 under guidelines developed by V A Simonenko, K K Krupnikov, and L P Volkov.

An example of the experimental arrangement is shown in Fig. 3. An explosive device was placed in the box constructed in a rock and encircled by a by-pass with recesses for placing measuring assemblies. Specifically, the assemblies were attached to a smooth polished surfaces made in the rock, each surface being oriented perpendicular to the direction toward the explosion center. The arrival times of a shock wave at the chosen points were registered by electrocontact sensors.

Even the first experiment enabled an extended, six-assembly program to be carried out. One of the assemblies was used to measure the shock compressibility of granite relative to that of iron, producing, for the shock adiabat of granite, a point at twice the pressure achieved in laboratory

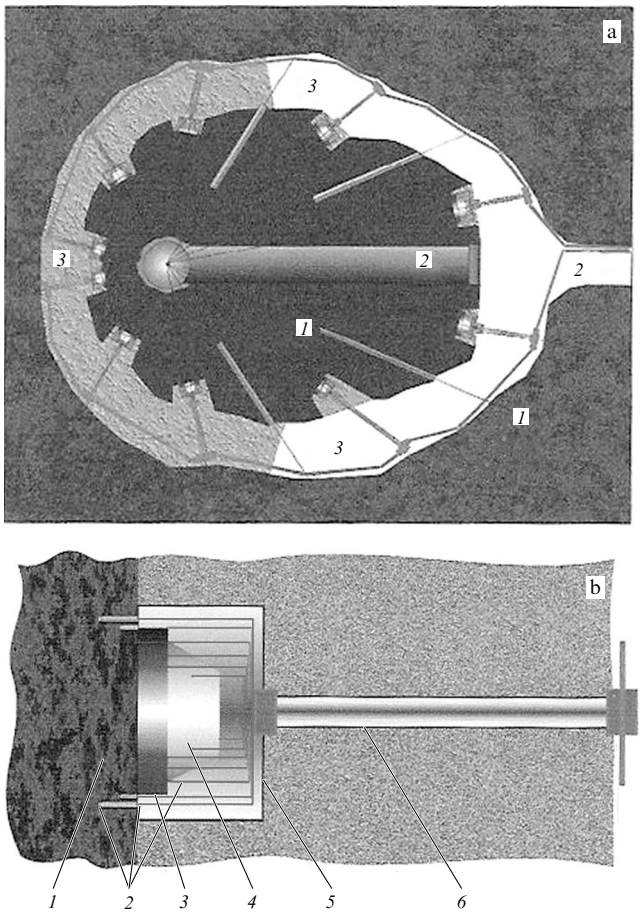

Figure 3. (a) Schematics of an experiment to study the relative compressibility of various materials: *1*, rock massif; *2*, main adit; *3*, ring drifting. (b) Schematic arrangement and location of the measuring assembly: *1*, rock; *2*, contact sensors; *3*, reference material; *4*, sample under study; *5*, protective housing; *6*, protective pipe with cables.

experiments at the time. Subsequent measurements yielded improved shock compressibility values for water and aluminium and also revealed the effect of the melting process on shock front evolution in quartzite. All in all, VNIITF specialists have used more than sixty measuring assemblies in their measurements using underground test explosions. In particular, the same experimental arrangement was employed in the Institute's last nuclear explosion studies in 1988, in which useful data on the shock compressibility of quartzite, wave bifurcation in quartzite caused by near quartz – stishovit phase transition [6], and the shock compression of porous aluminium were obtained.

A similar arrangement was also used by VNIIEF researchers, first under the direction of Al'tshuler and later under R F Trunin (see Ref. [5] for reviews).

The body of data reveals the existence of two phase transitions in quartzite: from the normal to the high-density phase in the pressure range from 230 to 350 kbar, and melting at about 1.15 Mbar [7]. Figure 4 illustrates the shock adiabat for the region of the transition.

Originally, in constructing wide-range equations of state people used data from the variously modified forms of the Thomas – Fermi model [8 – 11] with due account of regular quantum corrections in various modifications. These models, however, are flawed in that they ignored the irregular influence of the atomic electron shells, and a number of

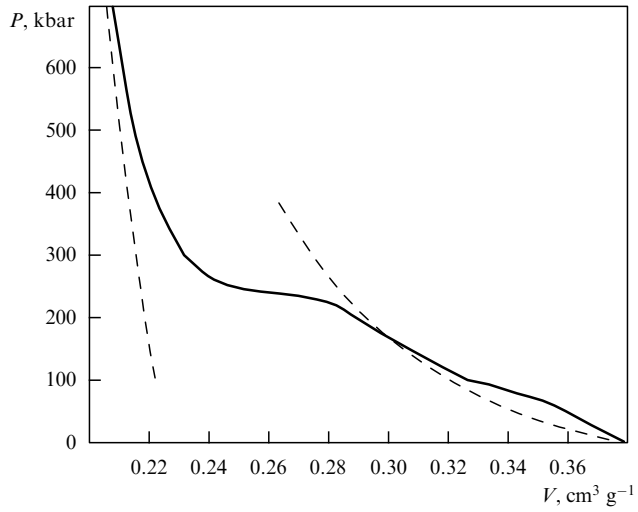

Figure 4. Solid curve: processed experimental data; dashed curves: theoretical Hugoniots for the normal and high-density phases.

studies were conducted in parallel with underground nuclear explosions to see to what extent this irregularity plays a role in shock-compressed high-density media. Specifically, the shock compressibilities of Al, Pb, water, and quartz relative to that of iron were measured at record high pressures using the reflection method [12, 13]. The experimental data on the shock adiabats of Al and Pb are given in Table 1 [14].

Table 1. Shock adiabats.

Aluminium			Lead		
D, km s^{-1}	P, Mbar	$\delta = \rho/\rho_0$	D, km s^{-1}	P, Mbar	$\delta = \rho/\rho_0$
43.57	36.3	3.73	30.42	79.6	4.13
49.45	48.5	4.00	35.0	107.2	4.37
50.53	50.6	4.05	35.44	111.6	4.60
65.22	87.3	4.55	46.6	197.3	5.00
75.03	115.9	4.61	53.43	262.4	5.26
80.11	132.5	4.66	56.98	300.2	5.40
85.98	152.5	4.64	61.33	346.5	5.31
107.10	237.9	4.73	76.7	543.8	5.39

Notes: D, shock wave speed; P, frontal pressure; ρ_0, initial density of the material, and ρ, density behind the shock front.

Based on this information, the applicability of various theoretical models in this field can be assessed [15–19].

The method with which the above results were obtained is a relative one, thus requiring a knowledge of the equation of state of a reference material.

The absolute measurement of shock compressibility requires that the mass velocity and shock wave velocity be simultaneously measured, but the known laboratory methods for determining mass velocity have physical limitations under high-pressure and high-velocity conditions.

In a scheme proposed by US researchers [20], the mass velocity in the region of high pressures is measured using the fact that interaction resonances between neutrons and the nuclei of a moving material experience a shift from their positions for nuclei at rest (Doppler shift).

The resonances are most pronounced in molybdenum which is precisely the element studied in Ref. [20]. Uranium was compressed to $P \approx 90$ Mbar, and in molybdenum a shock wave velocity $D = 18.7$ km s^{-1} and a mass velocity behind the shock front $U = 10.2$ km s^{-1} were measured. The accuracy of $\pm 5\%$ achieved in velocity measurements is not sufficient for the obtained experimental point to be used for gauging the equations of state of molybdenum. The major error sources in the measurements are associated with the uncertain emission duration of the neutron source used and with the difference in the resonance smearing mechanism, but because for many of these factors the contribution to the total error decreases as the mass velocity increases, it is in principle possible to achieve an accuracy of $\Delta U/U \approx 1\%$ at $U \approx 100$ km s^{-1}.

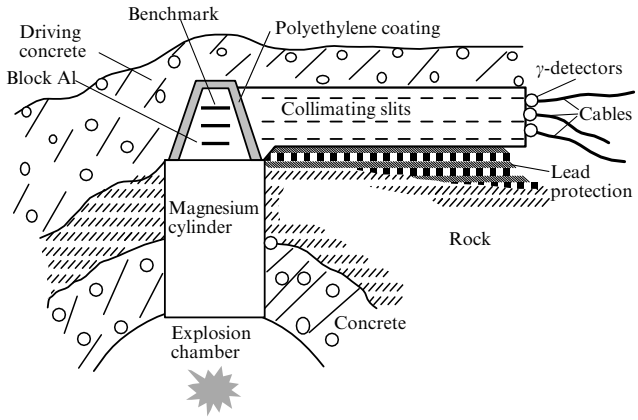

Figure 5. Schematic diagram of an experiment with gamma-ray benchmarks.

As suggested in Ref. [21], the quantities D and U can be measured simultaneously using gamma-active benchmark layers introduced into the material being studied; an intense gamma-ray source can be obtained by neutron irradiation of a material with the radiation capture cross section of nuclei more than $\sim 10^3$ times that of the material being studied. A suitable material for the benchmark layers is europium, for which the (n, γ)-reaction cross section $\sigma = 220 \pm 80$ b at $E_n = 10-100$ eV. As the benchmark layers are dragged by the moving material in the process of gasdynamical motion, the instants of time they pass the control points are registered by a system of collimating slits (Fig. 5).

Practical implementations of the reflection method widely utilize aluminium as a reference material. Because its equation of state is strongly nonunique in the pressure range of 5–150 Mbar, aluminium became a focus of interest in the early applications of the new method. Table 2 summarizes the measurement results obtained using the latest methodical achievements in oscillogram processing and in how nonstationary motions and benchmark layers must be taken into account.

Table 2. Results of absolute measurements in aluminium.

Experiment No.	ρ_0, g cm^{-3}	D, km s^{-1}	U, km s^{-1}	P, Mbar	$\delta = \rho/\rho_0$
1	2.71	24.2 ± 0.7	15.1 ± 0.4	9.9 ± 0.3	2.65 ± 0.1
2	2.71	23.4 ± 0.6	14.5 ± 0.3	9.3 ± 0.2	2.63 ± 0.07
3	2.71	40 ± 5	30 ± 2	32 ± 5	3.9 ± 1.2

Experience in applying the gamma-ray-benchmark method to the measurement of shock compressibility shows that the method has much room for improvement by using various combinations of the benchmark with the material to be studied.

4. Thermonuclear burning research

In a number of explosion experiments, the conditions of thermonuclear ignition in deuterium and a deuterium – tritium (DT) mixture were investigated.

A theoretical criterion for a thermonuclear ignition was developed by the VNIITF – VNIIEF collaboration [22] and then extended to the case of thermonuclear fuel subject to inhomogeneous compression and heating [23].

Thermonuclear ignition turned out to be a problem of extreme complexity. In 1956 – 1962, a number of attempts were made by the two Institutes to ignite 'clean' units (the term clean meaning that a design contains only thermonuclear fuel and no fission materials).

The first success came in 1963 (VNIIEF, V B Adamskii, V N Mokhov, Yu A Trutnev).

Very special significance should be placed on an experiment based on the proposal of L P Feoktistov at VNIITF in 1965. The experiment was successful in initiating the ignition of deuterium and DT units and it also started research into the possibility of thermonuclear detonation.

Leader of the experiment: E I Zababakhin.

Engineering: B V Litvinov.

Theory and calculations: L P Feoktistov, E N Avrorin, A K Khlebnikov, L I Shibarshov, E G Gamalii.

Physical measurements: Yu A Zysin, A I Saukov, V G Rukavishnikov.

Based on the results of this physical experiment, the combustion of gaseous deuterium about 100 kt in power was realized in 1966. In 1972, the VNIIEF and VNIITF researchers teamed up to conduct a test of a record-clean (i.e., minimally radioactive) industrial-scale explosive charge with a power of 140 kt (which could be virtually infinitely increased). The research team included Yu S Vakhrameev, V N Mokhov, A V Pevnitskii, E N Avrorin, B V Litvinov, and B P Mordvinov. The year 1967 witnessed an experiment designed to determine the ignition limits of gaseous deuterium by testing a set of thermonuclear units made in various sizes. A very close agreement between the measured and predicted values for the limiting size was obtained.

In several experiments, attempts to model laser fusion targets have failed to produce ignition, presumably due to nonuniform irradiation and lack of precision in producing the models.

In the 1970s, the thermonuclear detonation of pipes filled with a DT mixture (DT cords) attracted much interest for its potential use in obtaining unlimited energy gain in the inertial fusion process.

Along these lines, research into detonation, first theoretical and then experimental, was started at VNIITF on the initiative of L P Feoktistov.

The theoretical studies involved both numerical simulation [24] and analytical calculations and estimations [25].

Thermonuclear detonation turned out to be, in Feoktistov's words, 'much richer in physics' than the detonation of explosives, requiring that a variety of physical phenomena be considered, including the following:

- thermonuclear reactions,
- electron and photon heat conduction,
- hydrodynamical motion,
- alpha-particle transport,
- neutron transport.

Depending on the parameters, one process or another turns out to be leading: either 'hydrodynamic' detonation occurs or a supersonic burning wave originates.

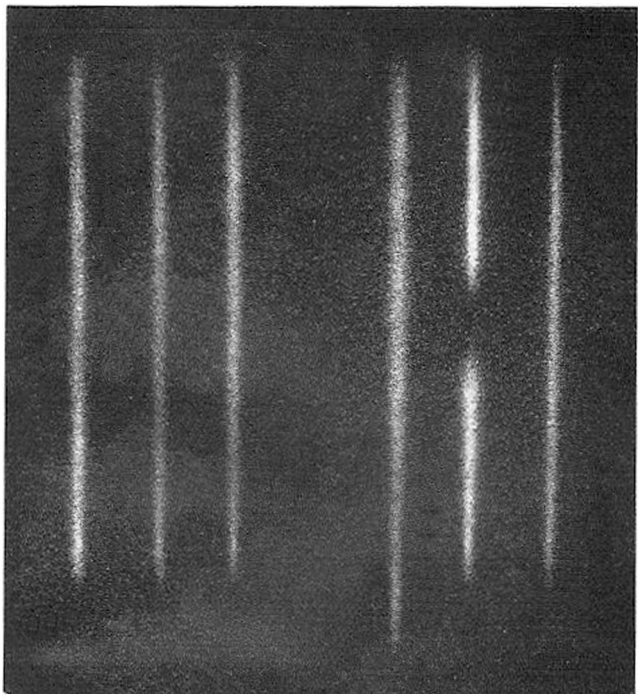

Figure 6. Images of detonating cords.

Feoktistov and his colleagues were able to obtain estimates for the detonation velocity and the limiting size of the detonating cord, i.e., the two major parameters of thermonuclear detonation. Curiously enough, there is order-of-magnitude agreement between the limiting detonation diameter of a DT mixture and the critical diameters of high-power chemical explosives.

These estimates were confirmed reasonably accurately in a number of experiments using the energy of a nuclear explosion to precompress DT cords and cause ignition. The DT mixture was compressed to ~ 10 g cm^{-3} by nuclear implosion, the diameters of the cords being compressed to 2 to 3 orders of magnitude less than their length. The diameter at which detonation terminated was somewhat greater than predicted, possibly due to the lack of homogeneity in compressing and heating the thermonuclear mixture.

The detonation velocity was measured to range between 5×10^8 and 8×10^8 cm s^{-1}, and the maximum temperatures between 50 and 70 keV, all in accordance with theory. As an example, Fig. 6 demonstrates a photograph of the time-integrated neutron images of several DT cords, taken in one of the experiments.

5. 1983 multitask physics experiment

The 1983 experiment was designed, first, to apply the reflection method to measure the shock compressibility of Al and Pb relative to that of Fe, as well as the compressibility of Fe relative to that of Pb. For this purpose, some of the horizontal channels were used. In other channels, averaged and spectral opacities of Al and Fe were measured (the remaining horizontal channels) and detonation regimes investigated (the top of the apparatus). The experimental apparatus is shown schematically in Fig. 7.

At maximum pressures, the required information was collected by placing the measuring assemblies in the immediate vicinity of the nuclear explosive. Because large radiative

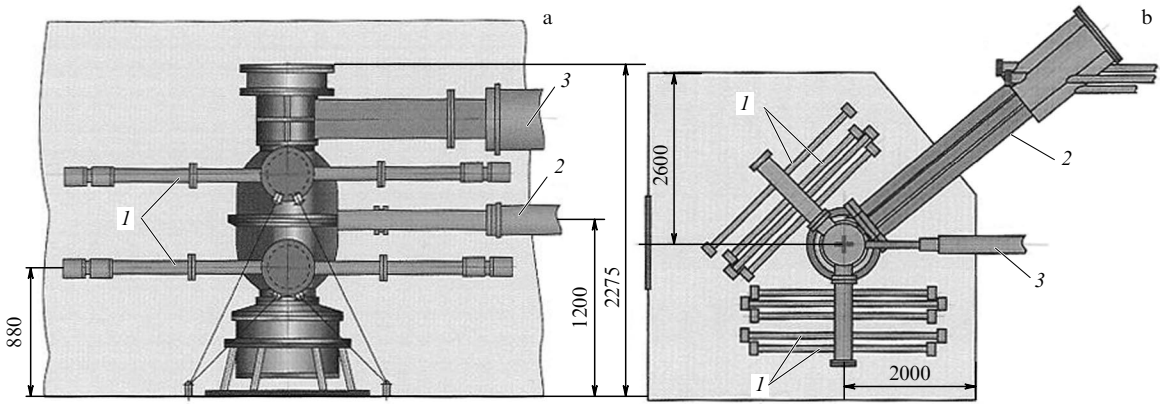

Figure 7. Schematic setup of the 1983 multitask experiment: (a) side view, and (b) top view — *1*, light channels for shock-wave and integrated optical measurements; *2*, channels for spectral optical measurements, and *3*, channels for registering thermonuclear detonation.

fluxes prevented the employment of electrocontact sensors, optical detection means were developed.

The experiment provided data on the shock compressibility of Al and Pb relative to the compressibility of Fe, and the compressibility of Fe relative to that of Pb, while also improving results on radiation lengths (both integral and spectral) and measuring the major parameters of thermonuclear detonation.

6. Production of transuranium isotopes

Using intense neutron fluxes accompanying nuclear explosions, American and Soviet scientists were able to discover a number of new isotopes of transuranium elements [26, 27]:

- ^{244}Pu, ^{245}Pu, ^{246}Pu;
- ^{246}Am;
- ^{246}Cm, ^{247}Cm, ^{248}Cm;
- ^{249}Bk;
- ^{249}Cf, ^{252}Cf, ^{253}Cf, ^{254}Cf;
- ^{253}Es, ^{255}Es;
- ^{255}Fm.

In the late 1980s, cooperation began between the Soviet nuclear research centers and American nuclear laboratories, in which connection, in particular, the prospects for internationally collaborative research using nuclear explosions were discussed.

However, the USSR's 1989 nuclear testing moratorium and the Comprehensive Nuclear Test Ban Treaty that followed have put an end to this research.

References

1. Nikiforov A F, Novikov V G, Uvarov V B *Kvantovo-statisticheskie Modeli Vysokotemperaturnoi Plazmy*: *Metody Rascheta Rosselandovykh Probegov i Uravnenii Sostoyaniya* (Quantum-Statistical Models of High-Temperature Plasma: Methods for Calculating Rosseland Lengths and Equations of State) (Moscow: Fizmatlit, 2000) [Translated into English: *Quantum-Statistical Models of Hot Dense Matter*: *Methods for Computation of Opacity and Equations of State* (Basel: Birkhäuser-Verlag, 2005)]
2. Avrorin E N, Vodolaga B K, Simonenko V A, Fortov V E *Usp. Fiz. Nauk* **163** (5) 1 (1993) [*Phys. Usp.* **36** 337 (1993)]
3. Trunin R F *Usp. Fiz. Nauk* **164** 1215 (1994) [*Phys. Usp.* **37** 1123 (1994)]
4. Al'tshuler L V *Usp. Fiz. Nauk* **85** 197 (1965) [*Sov. Phys. Usp.* **8** 52 (1965)]
5. Al'tshuler L V, Zel'dovich Ya B, Styazhkin Yu M *Usp. Fiz. Nauk* **167** 107 (1997) [*Phys. Usp.* **40** 101 (1997)]; Al'tshuler L V et al. *Vestn. Ross. Akad. Nauk* **74** 1011 (2004) [*Herald Russ. Acad. Sci.* **74** 613 (2004)]
6. Vil'danov V G et al. *Khim. Fiz.* **14** (2 – 3) 122 (1995)
7. Zhugin Yu N et al. *Fiz. Zemli* **35** (6) 46 (1999)
8. Latter R *Phys. Rev.* **99** 1854 (1955)
9. Kirzhnits D A *Zh. Eksp. Teor. Fiz.* **32** 115 (1957) [*Sov. Phys. JETP* **5** 64 (1957)]
10. Kalitkin N N, Kuz'mina L V, Preprint No. 35 (Moscow: Institute of Applied Mathematics of the USSR Academy of Sciences, 1975)
11. Kopyshev V P *Chislennye Metody Mekh. Sploshnykh Sred* **8** (6) 54 (1977)
12. Avrorin E N et al. *Pis'ma Zh. Eksp. Teor. Fiz.* **31** 727 (1980) [*JETP Lett.* **31** 685 (1980)]
13. Avrorin E N et al. *Zh. Eksp. Teor. Fiz.* **93** 613 (1987) [*Sov. Phys. JETP* **66** 347 (1987)]
14. Avrorin E N et al. *Pis'ma Zh. Eksp. Teor. Fiz.* **43** 241 (1986) [*JETP Lett.* **43** 308 (1986)]
15. Troshin O V *Izv. Vyssh. Uchebn. Zaved. Fiz.* (4) 57 (1968)
16. Zink J W *Phys. Rev.* **176** 279 (1968)
17. Sin'ko G V *Chislennye Metody Mekh. Sploshnykh Sred* **10** (3) 124 (1979)
18. Nikiforov A F, Novikov V G, Uvarov V B, in *Matematicheskoe Modelirovanie*: *Fiziko-khimicheskie Svoistva Veshchestva* (Mathematical Modeling: Physical and Chemical Properties of Matter) (Eds-in-Chief A A Samarskii, N N Kalitkin) (Moscow: Nauka, 1989) p. 162
19. More R M et al. *Phys. Fluids* **31** 3059 (1988)
20. Ragan III C E, Silbert M G, Diven B C *J. Appl. Phys.* **48** 2860 (1977)
21. Simonenko V A et al. *Zh. Eksp. Teor. Fiz.* **88** 1452 (1985) [*Sov. Phys. JETP* **61** 869 (1985)]
22. Vakhrameev Yu S, Mokhov V N, Popov N A *At. Energ.* **49** (2) 91 (1980) [*At. Energy* **49** 567 (1980)]
23. Avrorin E N, Feoktistov L P, Shibarshov L I *Fiz. Plazmy* **6** 965 (1980) [*Sov. J. Plasma Phys.* **6** 527 (1980)]
24. Avrorin E N et al. *Fiz. Plazmy* **10** 514 (1984) [*Sov. J. Plasma Phys.* **10** 298 (1984)]
25. Feoktistov L P *Usp. Fiz. Nauk* **168** 1247 (1998) [*Phys. Usp.* **41** 1139 (1998)]
26. Ingley J S *Nucl. Phys. A* **124** 130 (1969)
27. Adamskii V B *At. Energ.* **81** 207 (1996) [*At. Energy* **81** 651 (1996)]