Physics – Uspekhi **43** (8) 755 – 775 (2000)

REVIEWS OF TOPICAL PROBLEMS PACS numbers: **41.60.–m**, **41.90.+e**, 42.25.Fx, **61.14.–x**

Diffraction and diffraction radiation

B M Bolotovskiĭ, E A Galst'yan

DOI: 10.1070/PU2000v043n08ABEH000683

Contents

Abstract. Similarities and differences between two closely related phenomena, diffraction and diffraction radiation, are discussed in the context of a scalar theory.

1. Introduction

Diffraction radiation is a type of radiation due to the uniform motion of a charged particle. A charged particle moving in a uniform medium may become a source of radiation if its velocity exceeds the phase velocity of light in the medium. The radiation occurring in this case is the well-known Vavilov – Cherenkov radiation the theory of which was formulated by I E Tamm and I M Frank.[1] Note here (this is important for what follows) that Vavilov – Cherenkov radiation is normally considered in the assumption that a charged particle moves uniformly in a homogeneous unbounded medium. Later on, Vavilov – Cherenkov radiation found important applications in high-energy physics, where it was used to register fast charged particles. Furthermore, fruitful physical concepts appeared based on the interaction between a moving charge and a synchronous wave. These concepts suggested, in particular, a vivid explanation of wave damping in a collisionless electron plasma.

If the medium is inhomogeneous along the particle trajectory, radiation occurs for any velocity of motion. The first who considered the radiation of a uniformly moving particle in an inhomogeneous medium were V L Ginzburg and I M Frank.[2] They analyzed the simplest type of inhomogeneity, i.e., a planar interface between two media with dissimilar refractive indices. A charged particle moving in one of the media approached the interface along the normal, crossed the interface to enter the second medium, and then, moving at the same velocity, went from the interface to infinity. V L Ginzburg and I M Frank calculated the radiation due to such a motion and completely determined all its characteristics, namely, the intensity, angular distribution, polarization, etc. The authors called it transition radiation. Note that the aim of Tamm and Frank was to explain the discovery made by P A Cherenkov and S I Vavilov a few years before, while Ginzburg and Frank predicted a new effect, which was revealed experimentally twelve years later. G M Garibyan afterwards showed that the forward transition radiation spectrum for a fast particle extends up to high frequencies proportional to the particle energy, which made it possible to create transition-radiation detectors of fast particles. As distinct from Cherenkov detectors, transition-radiation particle detectors do not only register the fact of particle passage, but also allow its energy to be determined.

In their paper devoted to transition radiation, V L Ginzburg and I M Frank for the first time considered the field of a charge uniformly moving in an inhomogeneous medium. The

[1] Tamm I E, Frank I M, "Coherent Radiation of a Fast Electron in a Medium", *Dokl. Akad. Nauk SSSR* **14** 107 (1937).

[2] Ginzburg V L and Frank I M, "To the Theory of Transition Radiation" *Zh. Eksp. Teor. Fiz.* **16** 15 (1946). For the development of the theory and applications see Garibyan G M and Yan Shi *Rentgenovskoe Perekhodnoe Izluchenie* (X-ray transition Radiation) (Erevan: Izd. Akad. Nauk Arm. SSR, 1983); Ginzburg V L and Tsytovich V N *Perekhodnoe Izluchenie i Perekhodnoe Rasseyanie* (Transition Radiation and Transition Scattering) (Moscow: Nauka, 1984); Frank I M *Izluchenie Vavilova – Cherenkova. Voprosy Teorii* (Vavilov – Cherenkov Radiation. Theoretical Problems) (Moscow: Nauka, 1988).

B M Bolotovskiĭ P N Lebedev Physics Institute,
Russian Academy of Sciences
Leninskiĭ prosp. 53, 117924 Moscow, Russian Federation
Tel. (7-095) 132-62 35
E-mail: bolot@td.lpi.ac.ru
E A Galst'yan Moscow Radio Engineering Institute,
Russian Academy of Sciences,
Varshavskoe shosse 132, 113519 Moscow, Russian Federation
Tel. (7-095) 118-03 35
E-mail: galstjan@aha.ru

Received 10 November 1999, revised 21 June 2000
Uspekhi Fizicheskikh Nauk **170** (8) 809 – 830 (2000)
Translated by M V Tsaplina; edited by S N Gorin

inhomogeneity, as was already said, was a planar interface. Later on, other types of inhomogeneities were also discussed, such as screens with apertures or finite-size objects so located near the trajectory that the particle passing by the body does not cross its surface. Such a passage also induces radiation, which was called diffraction radiation.[3]

The physical nature of transition and diffraction radiations is the same: the field of a passing-by particle induces alternating currents (or alternating polarization) in the inhomogeneity, which are a kind of radiation sources. We say 'a kind of' because we think it needless to answer the question of which of them — the moving charged particle or the inhomogeneity — is the source of radiation in this case. Both the moving charge and the optical inhomogeneity are necessary for the radiation to occur. If one of them is missing, no radiation will appear.

However, in spite of the like physical nature, transition and diffraction radiations differ in the methods with which they are analyzed, and this difference is deeper than simply methodical. To understand the difference, we consider the transformation of a free plane electromagnetic wave by an optical inhomogeneity. If an inhomogeneity is a planar interface between two media and a plane wave is incident on such an interface, reflection and refraction occur. The total field consists of an incident, a reflected, and a refracted wave, the latter two being expressed in terms of the incident wave with the help of Fresnel coefficients. If a charged particle is incident on the interface, the field of this particle can be decomposed into plane waves, and then for each such wave the reflected and refracted waves are found using Fresnel coefficients. The total field is equal to the sum of all incident, reflected, and refracted waves. This approach was exploited by I M Frank who showed that the transition radiation field can be expressed via Fresnel coefficients.

But Fresnel coefficients are only determined for a planar interface, and the plane separating two media must have a sufficiently large (better infinite) length, otherwise diffraction will occur in addition to reflection and refraction.

If a charged particle moves near a finite-size object, then, as in the transition radiation problem, its field can be decomposed into plane waves with a consequent consideration of each such wave transformation due to diffraction by the body. Fresnel coefficients cannot be used in the solution of such a problem, for they are not even defined for a finite-size body. The transformation of waves by a finite-size body should be determined by the methods developed in the theory of diffraction. Thus, although the 'original' physical nature of diffraction and transition radiations is much the same, there exist distinctions in their physical characteristics. These distinctions are easier to understand in the context of the definition of diffraction proposed by A Sommerfeld in his 'Optics'.[4] He says that diffraction is understood as any deflection of light from a rectilinear path of rays unless it can be interpreted as reflection or refraction.

Obviously, a planar interface only yields reflection and refraction of waves incident on it, and thus no diffraction can occur in this case. Hence, transition radiation alone is generated on a planar interface, while diffraction radiation does not occur.

On the other hand, in some cases transition radiation can be treated as a limiting case of diffraction radiation. Let us consider, for example, the radiation of a uniformly moving charged particle passing through a round aperture in a thin perfectly conducting screen. Since in this case there is no perfectly flat interface (it would exist if the aperture radius were equal to zero), we are dealing with a typical diffraction radiation problem. We are to find the field of a moving charge in the presence of a screen with an aperture. Suppose we have solved this problem and determined the radiation field that is excited when the charge is passing through the aperture. Then, we can state that with the aperture radius tending to zero the solution will continuously pass over to the solution for the field of transition radiation due to the incidence of a uniformly moving charge on an ideal mirror. Such a limiting transition is also possible if we know the diffraction radiation occurring when a charged particle crosses a circular opaque disk when moving along its axis. Obviously, in the limit when the disk radius tends to infinity, we also obtain transition radiation. A more extensive consideration of these cases is given below.

In this paper, we attempt to present a comparative description of two physical phenomena — diffraction and diffraction radiation. This form of presentation will allow the reader to easily clarify the similarity and distinctions of these related phenomena. Moreover, the diffraction phenomenon has been rather well studied for a long time and is included in textbooks. Practically all guidebooks on electrodynamics or optics include a special section devoted to diffraction. As to diffraction radiation, it has attracted researchers' attention rather recently and is practically absent from the manuals.[5] Meanwhile, increasingly many publications (concerning both theoretical and applied aspects) have already been devoted to this problem. The reason for such interest is that diffraction radiation plays an important role in several fields of physics, in particular, radio engineering and high-energy physics, where it has found useful applications.

We now remind the reader of the essence of the diffraction phenomenon. Let a wave propagate in a homogeneous medium (for simplicity, we hereafter assume this medium to be a vacuum). The wave field f is described by the D'Alembert equation

$$\frac{\partial^2 f}{\partial x^2}+\frac{\partial^2 f}{\partial y^2}+\frac{\partial^2 f}{\partial z^2}-\frac{1}{c^2}\,\frac{\partial^2 f}{\partial t^2}=0\,. \tag{1a}$$

One of the solutions to this equation is a plane wave of the form

$$f=A\exp\left[\mathrm{i}(k_x x+k_y y+k_z z-\omega t)\right], \tag{1b}$$

where ω is the wave frequency and $\mathbf{k}=(k_x,k_y,k_z)$ is the wave vector determining the wavelength and the wave propagation direction. The wave frequency ω the components of the wave vector $\mathbf{k}$ and the wave amplitude A are independent of the coordinates.

[3] See, e.g., Bolotovskiĭ B M and Voskresenskiĭ G V *Usp. Fiz. Nauk* **88** 209 (1966).

[4] The fundamentals of the theory of diffraction can be found in the books by Vainshtein L A *Élektromagnitnye Volny* (Electromagnetic Waves) (M.: Radio i Svyaz', 1988); Sommerfeld A *Optics*, transl. from the German (Academic Press, New York, 1954); and Landau L D and Lifshitz E M *Teoriya Polya* (The Classical Theory of Fields) (M.: Nauka, 1988).

[5] An exception is the book by Ter-Mikaelyan M L *Vliyanie Sredy na Élektromagnitnye Protsessy pri Vysokikh Énergiyakh* (The Influence of the Medium on Electromagnetic Processes at High Energies) (Erevan: Izd. Akad. Nauk Arm. SSR, 1969), where one chapter is devoted to diffraction radiation.

Now we suppose that the medium contains inhomogeneities, say, reflecting or absorbing screens, but we observe the field f in the space region containing no inhomogeneities. The wave equation (1a) is valid in this case as before, but the plane wave (1b) will no longer be a solution. The presence of inhomogeneities leads to the appearance of waves with other directions of the wave vector $\mathbf{k}$, and, accordingly, the solution will be represented by a linear combination of waves of the form (1b) with different $\mathbf{k}$ directions. The inhomogeneities can be said to play the role of extra sources that generate additional waves propagating in all directions. The diffraction phenomenon consists precisely in the appearance of these additional waves. The character of the field due to these additional waves is determined by the structure of the inhomogeneities (the position and shape of the screens, in particular). Different conditions of observation (distinctions in the incident wave directions, in the positions of inhomogeneities, and in the position of the observer) yield an amazing variety of phenomena characteristic of this field of physics.

The typical diffraction problem is naturally formulated as follows. A wave emitted by a certain source is incident on a screen (or on a prescribed arrangement of screens). If the source is located far enough from the scattering system, the incident wave may be thought of as plane. One should then determine the scattered field. Note that in the classical theory of diffraction the position of the wave source does not change with time. The wave source is at rest at a prescribed point.

Let us now analyze a somewhat different, although related problem. Suppose a field source moves past a scattering system. For example, if it is an electromagnetic field, the source may be represented by a moving charged particle. We assume for simplicity that the particle moves uniformly. If the field is expanded into a Fourier time integral, the waves of all frequencies turn out to damp exponentially with distance from the particle trajectory. This implies that, when moving uniformly and rectilinearly in a vacuum, a charged particle does not radiate. The field of a uniformly moving charged particle is carried along at the same velocity at which the particle moves. While the particle flies past an inhomogeneity, this entrained field induces alternating currents (or an alternating polarization) on this inhomogeneity, and the latter becomes a source of radiation.

A few decades ago, I M Frank introduced term the 'the optics of moving sources'[6] to define the branch of electrodynamics dealing with various types of radiation generated by moving charged particles, moving dipoles, and other moving sources of an electromagnetic field. The optics of moving sources includes phenomena such as Vavilov–Cherenkov radiation, transition radiation, a Doppler effect, and synchrotron radiation. Diffraction radiation can with good ground also be referred to the optics of moving sources (where a more general term, 'the electrodynamics of moving sources,' can similarly be applied).

Some specific features of diffraction radiation will be considered below. But before this, we will briefly present a simple scalar theory of diffraction that allows a consideration of the basic qualitative features of free electromagnetic wave scattering by screens with apertures. Then, we will show what modifications should be introduced into the theory to make it possible to describe the scattering of a coupled field (i.e., a field transported by a uniformly moving source). Finally, simple examples will be given to consider the basic qualitative features of diffraction radiation.

[6] See I M Frank "Optics of Light Sources Moving in Refracting Media" *Usp. Fiz. Nauk* **68** (3) 397 (1959).

2. Simple scalar theory of diffraction

For simplicity, we will consider not a vector field, but a scalar wave field, i.e., a field defined by a single function $f(x, y, z, t)$ that satisfies the D'Alembert equation

$$\frac{\partial^2 f}{\partial x^2} + \frac{\partial^2 f}{\partial y^2} + \frac{\partial^2 f}{\partial z^2} - \frac{1}{c^2}\frac{\partial^2 f}{\partial t^2} = 0 \tag{1}$$

or

$$\Delta f - \frac{1}{c^2}\frac{\partial^2 f}{\partial t^2} = 0\,. \tag{2}$$

There are physical problems in which a single function is indeed enough to describe the field. The propagation (and diffraction) of sound waves may serve as an example. However, a single function is generally insufficient to describe an electromagnetic field. An electric field in a vacuum is described by a vector in a three-dimensional space, i.e., three functions are needed to define an electric field. The same refers to a magnetic field. Hence, six functions should be given. True, these six functions are related by Maxwell equations, and therefore not all of them are independent. For instance, the field of a plane electromagnetic wave is defined by two functions only. Even in this case the scalar theory of diffraction is strictly speaking inapplicable. Nevertheless, in many cases the scalar theory is successfully applied for a qualitative and even a quantitative description of vector fields. We will consider a monochromatic field corresponding to a frequency ω. In this case, the function $f(x, y, z, t)$ can be written as follows:

$$f(x, y, z, t) = f_\omega(x, y, z)\exp(\mathrm{i}\omega t)\,. \tag{3}$$

The wave equation (1) for the function $f_\omega(x, y, z)$ will accordingly be written as

$$\left(\Delta + \frac{\omega^2}{c^2}\right) f_\omega = 0\,. \tag{4}$$

Introducing the quantity $k = \omega/c$, we rewrite equation (4) as

$$(\Delta + k^2) f_\omega = 0\,, \qquad k = \frac{\omega}{c}\,. \tag{4a}$$

Equation (4a) is called the Helmholtz equation after the famous German physicist and doctor Herman Helmholtz who applied it to the study of wave phenomena. Equation (4a) is in fact the wave equation for a field which has a fixed frequency ω. We first consider the diffraction of a free field satisfying the Helmholtz equation (4a). We will henceforth omit the subscript ω in view of the fact that the functions of the space variables x, y, and z dealt with in what follows describe the spatial distribution of the field at the spectral frequency ω, which means that the time dependence of the field is determined by the factor $\exp(\mathrm{i}\omega t)$.

Let us see how the solution of the Helmholtz equation depends on the form of the boundary conditions. Suppose there exists a flat screen with apertures and a wave incident on this screen (Fig. 1). To determine the field in this case, we should find a solution to the Helmholtz equation satisfying

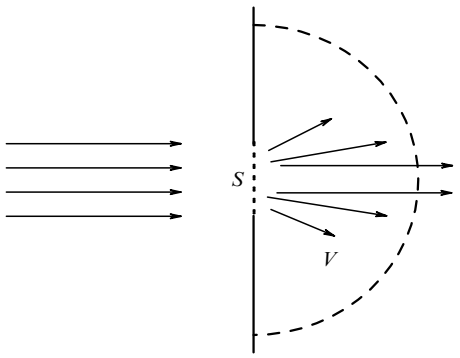

Figure 1. Wave diffraction by an aperture in a flat screen.

certain boundary conditions on the screen surface. We may require, for instance, that the field f assume a given value, in particular, $f = 0$, over the nontransparent portion of the screen. Sometimes a different boundary condition is necessary; namely, we should require that on the screen surface the derivative $\partial f/\partial n$ of the field f along the normal to the screen surface assume a given value. In some cases, the field f should satisfy a combination of these two conditions.

There exists a convenient relation expressing the field f in terms of the values of the function f itself and its normal derivative at the boundary surface (at the screen surface in our case). This relation comes out of the Green's formula. Let there be given two functions of the coordinates — $f(x, y, z)$ and $g(x, y, z)$. We will consider a certain volume V bounded by a closed surface S. With reasonable assumptions concerning the functions f and g and the properties of the surface S, the following integral relation holds:

$$\int_V (f\Delta g - g\Delta f)\,\mathrm{d}V = \oint_S (f\,\mathrm{grad}\,g - g\,\mathrm{grad}\,f)\,\mathrm{d}\mathbf{S}\,. \tag{5}$$

Here, the area vector element $\mathrm{d}\mathbf{S}$ is equal in magnitude to the area element $\mathrm{d}S$ of the surface S and corresponds in direction with the normal $\mathbf{n}$ to the surface at the integration point:

$$\mathrm{d}\mathbf{S} = \mathrm{d}S \cdot \mathbf{n}\,. \tag{6}$$

Relation (5) is called the Green's theorem. It can be regarded as a corollary to the integral Gauss' theorem, according to which the vector flux through a closed surface is equal to the integral of the divergence of this vector over the volume enclosed by the surface. Choosing the vector in the form

$$\mathbf{A} = f\,\mathrm{grad}\,g - g\,\mathrm{grad}\,f$$

and writing for it the Gauss' theorem, we arrive at relation (5). We transform relation (5) as follows. On the left-hand side (the volume integral V), we put the Helmholtz operator $(\Delta + k^2)$ instead of the Laplacian Δ. This will not alter the integrand because the k^2-containing summands will be mutually canceled out. On the right-hand side of equality (5), we will take into account relation (6), as well as the fact that

$$\mathbf{n}\,\mathrm{grad}\,f = \frac{\partial f}{\partial n}\,, \qquad \mathbf{n}\,\mathrm{grad}\,g = \frac{\partial g}{\partial n}\,, \tag{7}$$

where $\partial f/\partial n$ and $\partial g/\partial n$ are the derivatives of the functions f and g in the $\mathbf{n}$ direction.

After this, formula (5) is written as

$$\int_V \left[f(\Delta + k^2)g - g(\Delta + k^2)f\right]\mathrm{d}V = \oint_S \left(f\,\frac{\partial g}{\partial n} - g\,\frac{\partial f}{\partial n}\right)\mathrm{d}S\,. \tag{8}$$

Formula (8) shows that the volume integral V of a certain combination of the functions f and g is determined by the values of these functions and their normal derivatives on the surface S that restricts the volume V. But formula (8) also allows us to obtain a much more definite result, namely, to determine one of the two functions entering into (8), say, the function f, if the values of this function and of its normal derivative on the surface S are known. In other words, formula (8) makes it possible to obtain the solution of the Helmholtz equation in the volume V, which will satisfy given boundary conditions. Now we will derive the expression for the function f in the volume V in terms of boundary conditions.

If the function f satisfies the wave equation (4a), the second summand in the integrand in (8) vanishes to give

$$\int_V f(\Delta + k^2)\,g\,\mathrm{d}V = \oint_S \left(f\,\frac{\partial g}{\partial n} - g\,\frac{\partial f}{\partial n}\right)\mathrm{d}S\,. \tag{9}$$

We will now require that the function g satisfy the inhomogeneous Helmholtz equation with a point source on the right-hand side:

$$(\Delta + k^2)\,g = 4\pi\delta(\mathbf{r} - \mathbf{r}_0)\,. \tag{10}$$

The point $\mathbf{r}_0$ at which the source is located is assumed to be inside the volume V. We also require that the function $g(x, y, z)$ vanish on the surface S:

$$g\,|_S = 0\,. \tag{11}$$

Then, from relation (9) with allowance for (10) and (11), we have

$$4\pi f(\mathbf{r}_0) = \oint_S f\,\frac{\partial g}{\partial n}\,\mathrm{d}S\,. \tag{12}$$

Formula (12) allows the determination of the value of the field f at any point of the volume V if the field on the surface S limiting the volume V and the solution g of equation (10) satisfying the zero boundary conditions (11) on the surface S are known.

We will consider the half-space $x \geqslant 0$ as the volume V and the plane xy as the surface S.

We will first define the function g that satisfies the inhomogeneous Helmholtz equation (10) with a source at the point $\mathbf{r}_0 = (x_0, y_0, z_0)$ and the homogeneous boundary condition (11). Since the source is in the half-space $x \geqslant 0$, the value of x_0 is definitely positive. Let the coordinates of the point $\mathbf{r}_0$, at which the field is defined, be equal to x_0, y_0, and z_0. We will choose the point $\hat{\mathbf{r}}_0$ with coordinates $-x_0$, y_0, z_0. The points $\mathbf{r}_0$ and $\hat{\mathbf{r}}_0$ are located symmetrically about the screen plane $x = 0$, the point $\mathbf{r}_0$ lying inside and the point $\hat{\mathbf{r}}_0$ outside the chosen volume V.

At the point $\hat{\mathbf{r}}_0$, we will now place a point source phase-shifted by π relative to the source from the right-hand side of

equation (10). Recall that the function f and the function g, as well as the functions entering into the right-hand side of the Helmholtz equation are coordinate parts of some functions depending both on coordinates and time. The time factor of all these functions has the form $\exp[\mathrm{i}(\omega t + \varphi)]$, where the value of φ may be different for different functions. If the phase difference of two sources is equal to π, the corresponding space functions that determine the density of sources have opposite signs.

In the presence of two sources, the function g satisfies the equation

$$(\Delta + k^2)\, g = \delta(\mathbf{r} - \mathbf{r}_0) - \delta(\mathbf{r} - \hat{\mathbf{r}}_0)\,. \tag{13}$$

The solution of this equation is written in the form

$$g(\mathbf{r}, \mathbf{r}_0) = g(x, y, z; x_0, y_0, z_0) = \frac{\exp(\mathrm{i}k|\mathbf{r} - \mathbf{r}_0|)}{|\mathbf{r} - \mathbf{r}_0|} - \frac{\exp(\mathrm{i}k|\mathbf{r} - \hat{\mathbf{r}}_0|)}{|\mathbf{r} - \hat{\mathbf{r}}_0|}\,, \tag{14}$$

$$\mathbf{r}_0 = (x_0, y_0, z_0), \quad \hat{\mathbf{r}}_0 = (-x_0, y_0, z_0)\,. \tag{14a}$$

One can readily make sure that the function g satisfies the boundary condition (11), i.e., vanishes at the surface $x = 0$.

Thus, we have found the function g that is necessary to determine the wave field f with the help of formula (12).

Note that in our consideration the function g plays a purely auxiliary role and we choose it so as to obtain a convenient expression for the wave field f in the presence of a screen. The source on the right-hand side of the equation for g also plays a purely auxiliary role. It can be treated as a probe source that allows the field f to be determined at the point $\mathbf{r}$.

We now calculate $\partial g/\partial n$ on the surface S, i.e., on the plane $x = 0$, and substitute it in (12).

The derivative of the function g along the normal to the surface S is reduced in our case to a partial derivative with respect to the coordinate x. In order to determine the field f by formula (12), we should know the value of $\partial g/\partial n$ not over the entire space, but only on the surface S, i.e., on the plane $x = 0$ in our case. Simple calculations yield

$$\left.\frac{\partial g}{\partial n}\right|_S = -2\mathrm{i}kx_0\, \frac{\exp(\mathrm{i}kR_S)}{R_S^2} \left(1 - \frac{1}{\mathrm{i}kR_S}\right), \tag{15}$$

where R_S is the distance from the observation point (x_0, y_0, z_0) to the point $(0, x, y)$ on the surface S:

$$R_S = \sqrt{x_0^2 + (y - y_0)^2 + (z - z_0)^2}\,. \tag{16}$$

We will assume for simplicity that the observation point is sufficiently far from the screen plane, so that we may assume

$$kR_S \gg 1 \tag{17}$$

and neglect the second summand in brackets in formula (15). Inequality (17) physically implies that the distance from the observation point to the surface S is large compared to the wavelength. Neglecting the term $1/\mathrm{i}kR_S$ compared to unity, we obtain from (12) and (15)

$$f(\mathbf{r}) = -\frac{\mathrm{i}k}{2\pi} \oint_S f\, \frac{\exp(\mathrm{i}kR_S)}{R_S} \cos\theta\, \mathrm{d}S\,, \tag{18}$$

where R_S is the distance from the surface element $\mathrm{d}S$ and the observation point,

$$\cos\theta = \frac{x_0}{R_S}\,, \tag{18a}$$

and θ is the angle between the normal to the surface element $\mathrm{d}S$ and the direction toward the observation point.

Formula (18) gives the value of the field f at a given point of the volume V if the f values on the screen surface are known. Note that the function f describes the free field, i.e., the field without sources. This was the starting point in the derivation of formula (18): from the very beginning we assumed the function f to satisfy equation (4a) with zero right-hand side. It can readily be shown that the function f represented in the form of integral (18) actually satisfies the homogeneous Helmholtz equation for the interior points of the volume V.

Let now the chosen surface S (i.e., the plane $x = 0$) represent an opaque screen. Let the volume V (i.e., the half-space $x \geqslant 0$) contain no field sources. Then over the entire volume we have $f = 0$, because the waves from the external sources (sources from the region $x \leqslant 0$) cannot penetrate into the volume V. If the screen has apertures, the field of the sources from the region $x \leqslant 0$ can penetrate into the volume V through these apertures, and formula (18) allows an estimation of this field.

The field f may be assumed to differ from zero only in the regions of the surface S containing apertures and to be equal to zero over the rest of the screen surface. There are some physical grounds for such an assumption. Indeed, if a wave is incident on the screen from the exterior, it does not pass through the opaque screen portion (i.e., the portion of the screen containing no apertures). It is therefore natural to assume $f = 0$ at the corresponding points of the inner screen surface. Then formula (18) implies that the field in the interior region is determined only by the field values at the aperture (or apertures).

As concerns the values taken by the field f within the aperture (or apertures), they may be assumed, at least in the first approximation, to be the same as the field would have at the same points in the absence of the screen. Under this assumption, whose validity will be discussed below, formula (18) yields the expression for the field in the volume V:

$$f(\mathbf{r}) = -\frac{\mathrm{i}k}{2\pi} \int_{S'} f\, \frac{\exp(\mathrm{i}kR_S)}{R_S} \cos\theta\, \mathrm{d}S\,. \tag{19}$$

The integral here is taken only over the aperture area S' rather than the entire screen area S, $\mathbf{r}$ is an interior point of the volume V, R_S is the distance from the observation point $\mathbf{r}$ to the surface element $\mathrm{d}S$ on the aperture area, and θ is the angle between the normal $\mathbf{n}$ to the surface element $\mathrm{d}S$ and the segment joining the element $\mathrm{d}S$ with the observation point $\mathbf{r}$.

As can be seen from formula (19), the field f is an ensemble of spherical waves of the form $a\exp(\mathrm{i}kr)/r$ diverging from each element $\mathrm{d}S$ of the surface 'tensed' on the aperture. The amplitude a of each such partial wave is proportional to the value of the field f on the corresponding region of the surface and also to the cosine of the angle θ between the normal to the surface element $\mathrm{d}S$ and the direction from this element to the observation point. In fact, formula (19) exactly corresponds to the textual formulation of the Huygens' principle. Note here that formula (19) is far from being always derived using integral relation (5). In the book "*The Classical Theory of*

Fields" by L D Landau and E M Lifshitz, the derivation of formula (19) is essentially a direct representation of the Huygens' principle in the form of an integral relation, i.e., the prime point in the derivation is the physical content of the Huygens' principle.

Formula (19) can be rewritten as

$$f(\mathbf{r}) = \frac{\mathrm{i}k}{2\pi}\int_{S'} fR_S \exp(\mathrm{i}kR_S)\,\mathrm{d}\Omega\,, \tag{20}$$

where $\mathrm{d}\Omega$ is the solid angle occupied by the surface element $\mathrm{d}S$ as seen from the observation point:

$$\mathrm{d}\Omega = \frac{\mathrm{d}S}{R^2}\cos\theta\,.$$

The meaning of formula (19) or an equivalent formula (20) is as follows. Suppose the volume V is separated from the surrounding space by a screen S with apertures S' and has no field sources inside. The external space contains sources whose field penetrates into the volume V through the apertures in the screen. Then, if the field at the aperture is known, so is the field in the volume V, the latter being determined in terms of the former by formulas (19) and (20).

The surface S' bounding the edges of the aperture over which the integration in (19) is performed, may be chosen fairly arbitrarily. One should only remember that S' is the complement of the screen surface which makes it closed, and this total surface divides the space into two parts, and the volume V in which we define the field must not contain sources.

Formula (19) is approximate, since in its derivation we have made some simplifying assumptions. We recall these assumptions.

(1) We consider the field at points not very near the screen surface (not nearer than several wavelengths).

(2) The field of the external source at an aperture in the screen is assumed to be exactly the same as it would be in the absence of the screen.

The first assumption implies that the linear dimensions of the volume V in which we define the field must significantly exceed the radiation wavelength $\lambda = 2\pi c/\omega$. In our simple case, the volume V in which we define the field is the half-space $x \geqslant 0$, and this requirement is met without fail.

The validity of the second assumption can be assessed as follows. The field of the external source incident on the screen induces alternating currents and charges on the screen surface. These induced currents and charges are sources of secondary wave radiation. The total field is the sum of the field incident on the screen and the secondary waves emitted by the induced currents and charges. Therefore, over the area of the aperture the field is generally different from that which would exist in the absence of the screen. But since the radiation field in free space generally falls off with distance from the source, the complementary field turns out to be weaker at points of the aperture that are farther from the edge than near the edge of the aperture. Qualitative estimates can be obtained from the few exact solutions of the diffraction problem, the first of which was obtained by A Sommerfeld. These solutions imply that the complementary field becomes much smaller than the incident one already at a distance of several wavelengths from the edge of the aperture. This means that neglecting the complementary field is of course incorrect if the linear dimensions of the aperture are comparable in magnitude with the wavelength. Hence, formula (19) holds true if the linear dimensions of the aperture exceed appreciably the wavelength of the incident radiation.

Suppose the volume V in which the field is defined is sufficiently large. This assumption certainly holds, for example, if the screen is located in the plane $x = 0$ and the volume V is the half-space $x > 0$. Next, we suppose that the observation point is located at large distances from the screen aperture, so that the distance from the observation point to the aperture significantly exceeds the linear dimensions of the aperture in magnitude. In this case expression (19) for the field in the volume V is simplified. For the reader's convenience we present once again expression (19):

$$f(\mathbf{r}) = -\frac{\mathrm{i}k}{2\pi}\int_{S'} f\frac{\exp(\mathrm{i}kR_S)}{R_S}\cos\theta\,\mathrm{d}S\,.$$

In this formula, R_S is the distance from the observation point $\mathbf{r}$ to the integration element $\mathrm{d}S$ in the area of the aperture:

$$R_S = |\mathbf{r} - \mathbf{r}'|\,,$$

where $\mathbf{n}$ is the radius vector of the point on the surface element $\mathrm{d}S$. If the inequality $r \gg r'$ is fulfilled, we can expand the distance R_S in powers of the ratio r'/r and restrict ourselves to the first power of this small quantity to obtain

$$R_S = r - \frac{\mathbf{r}\mathbf{r}'}{r} = r - \mathbf{n}\mathbf{r}', \tag{21}$$

where $\mathbf{n}$ is a unit vector directed from the observation point to the point of integration (i.e., to the point $\mathbf{r}'$).

We substitute the value of R_S (21) into formula (19), where in the denominator of the integrand it suffices to take only the first term of series (21). In the exponent, this term must not be neglected because, although it is relatively small, its absolute value significantly determines the wave phase.

As a result, we obtain an expression for the scattered field at large distances from the aperture:

$$f(\mathbf{r}) = -\frac{\mathrm{i}k}{2\pi}\,\frac{\exp(\mathrm{i}kr)}{r}\int_{S'} f\exp(-\mathrm{i}k\mathbf{n}\mathbf{r}')\cos\theta\,\mathrm{d}S\,. \tag{22}$$

At large distances from the aperture, the field is a diverging spherical wave $\exp(\mathrm{i}kr)/r$. The amplitude of this wave is proportional to the integral

$$\int_{S'} f\exp(-\mathrm{i}k\mathbf{n}\mathbf{r}')\cos\theta\,\mathrm{d}S$$

taken over the aperture area.

If we introduce the wave vector of the scattered wave

$$\mathbf{k} = k\mathbf{n}\,,$$

expression (22) may be rewritten as

$$f(\mathbf{r}) = -\frac{\mathrm{i}k}{2\pi}\,\frac{\exp(\mathrm{i}kr)}{r}\int_{S'} f\exp(-\mathrm{i}\mathbf{k}\mathbf{r}')\cos\theta\,\mathrm{d}S\,. \tag{23}$$

We rewrite this formula for a simple particular case which we will consider in more detail below. Let the screen be the plane $x = 0$ with one aperture which is so located that the origin lies in the aperture plane. Then, formula (23) can be rewritten as follows:

$$f(\mathbf{r}) = -\frac{\mathrm{i}k}{2\pi}\,\frac{\exp(\mathrm{i}kr)}{r}\int_{S'} f(y', z') \times \exp\left[-\mathrm{i}(k_y y' + k_z z')\right]\cos\theta\,\mathrm{d}y'\,\mathrm{d}z'. \tag{24}$$

Here, $f(y', z')$ yields the field value over the aperture plane, the quantity $r = \sqrt{x^2 + y^2 + z^2}$ is the distance from the observation point to the aperture and is assumed to be large compared to the linear dimensions of the aperture. Under such conditions, the quantity $\cos\theta = k_x/k$ in the integrand may be thought of as a constant and $\cos\theta$ may be taken off the integral sign. If small scattering angles are considered, one may assume $\cos\theta = 1$. It has been noted above that far from the aperture the field has the form of a spherical wave. As can be seen from formula (24), the amplitude of this wave is determined by the Fourier transform of the field distribution on the inner side of the screen (i.e., on the side facing the volume V).

3. A simple scalar theory of diffraction radiation

We now consider the simplest problem of diffraction radiation. Suppose an opaque screen with apertures is positioned in the plane $x = 0$ (Fig. 2). Let a charged particle move along the x axis at a constant velocity v. The particle charge will be designated by q. The equation of particle motion will be written in the form $x = vt$, $y = z = 0$. The particle approaches the screen from the side of negative x values, crosses the screen plane at the moment $t = 0$, and then moves away from the screen plane in the positive direction of the x axis. Depending on the positions of apertures on the screen, the particle either flies through the aperture or crosses the screen in a dense nontransparent region. It is required, as in the diffraction problem considered above, that the field in the half-space $x > 0$ be defined.

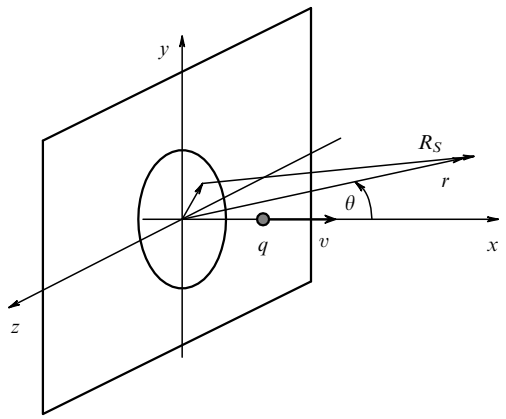

Figure 2. Passage of a point charged particle through a round aperture in a flat screen.

A charged particle moving in a vacuum at a constant velocity does not radiate. As has been said above, if the field of a moving charged particle is expanded in a Fourier time integral, i.e., if the field is represented as a set of harmonics with all possible frequencies, then in the case of a uniform motion all the harmonics damp in space with distance from the particle trajectory. But when a screen appears in the way of the particle, diffraction of the damped harmonics occurs, their scattering by the screen. And undamped waves going to infinity may appear, i.e., radiation.

The radiation may seem accessible for calculation using formula (19) — the basic formula of the scalar theory of diffraction. Indeed, if there is a screen with apertures and a charged particle flies near this screen, then to determine the radiation in the volume V using formula (19) it is sufficient to know the field over the area of the aperture. But in the case of diffraction radiation this approach generally leads to erroneous results. The reason is as follows. If a wave falls on a screen with an aperture, the field on the other side of the screen is determined, according to formula (19), by the integral of the field over the aperture area. If we make the aperture size tend to zero, the field on the other side of the screen (i.e., in the volume V) in the limit vanishes. Let us now consider the case of a charged particle incident on a screen. For definiteness, we assume the screen to be located in the plane $x = 0$. The particle flies up to the screen from the half-space $x < 0$, crosses the screen, and then moves in the half-space $x > 0$ (i.e., according to our terminology, in the volume V). Suppose we know the Fourier component F_ω of the particle field, which corresponds to the frequency ω. If we substitute F_ω for f in formula (19), we obtain the field scattered by the aperture. If we now make the aperture size tend to zero, the scattered field in the volume V vanishes as in the case of normal diffraction. But the total field in the volume V must not vanish even if the charge moves uniformly and rectilinearly. Indeed, a moving charge carries along its own field. Moreover, when a uniformly moving charge crosses the screen and gets into the half-space $x > 0$, a burst of transition radiation occurs. If a charge in volume V is accelerated, there also arises additional radiation along with transition radiation. Formula (19) contains neither transition, nor any additional radiation, nor a transported field, because the field f, for which this formula was derived, was assumed from the very beginning to satisfy the homogeneous Helmholtz equation $\Delta f + k^2 f = 0$. This equation describes a free field without sources in the volume V. Transition radiation is on the contrary the radiation of a source which, in addition, is not at rest, but moves. That is why, if we want to describe diffraction radiation, we should formulate a theory analogous to the theory of diffraction, but for the case when the field satisfies the wave equation with a nonzero right-hand side (the right-hand side defines the source density). We describe this density by the function $s(x, y, z, t)$ and determine the field generated by this source via the potential function $\varphi(x, y, z, t)$ as is normally done in electrodynamics and fluid mechanics. We postpone the discussion of the question of how fields are expressed in terms of the potential function. It is important for us now that the function $\varphi(x, y, z, t)$ satisfies the inhomogeneous wave equation

$$\frac{\partial^2\varphi}{\partial x^2} + \frac{\partial^2\varphi}{\partial y^2} + \frac{\partial^2\varphi}{\partial z^2} - \frac{1}{c^2}\frac{\partial^2\varphi}{\partial t^2} = -4\pi s(x, y, z, t)\,, \tag{25}$$

and the Fourier component φ_ω of the function φ satisfies the inhomogeneous Helmholtz equation

$$\Delta\varphi_\omega + k^2\varphi_\omega = -4\pi s_\omega\,, \tag{26}$$

where s_ω is the Fourier component of the source density (say, the charge density) corresponding to the frequency ω. Here we use the following definition of the Fourier component. If $F_\omega(x, y, z)$ is the Fourier component of the function $F(x, y, z, t)$, these two functions are related as

$$F(x, y, z, t) = \int_{-\infty}^{\infty} F_\omega(x, y, z)\exp(-\mathrm{i}\omega t)\,\mathrm{d}\omega\,,$$

$$F_\omega(x, y, z) = \frac{1}{2\pi}\int_{-\infty}^{\infty} F(x, y, z, t)\exp(\mathrm{i}\omega t)\,\mathrm{d}t\,. \tag{27}$$

It would generally suffice to present one of these two relations and the other would be a corollary to it. But for reader's convenience we present both.

We now turn to the derivation of the basic formula of diffraction radiation in the scalar approximation of the theory of diffraction. As in the diffraction problem, we proceed from the integral Green's formula [see formula (8)] for two functions; this time this is the potential φ describing the diffraction radiation field and an auxiliary function g (as the function g, we take, as in the case considered above, the Green's function for the boundary problem in question):

$$\int_V \left[\varphi(\Delta + k^2)g - g(\Delta + k^2)\varphi\right] \mathrm{d}V = \int_S \left(\varphi \frac{\partial g}{\partial n} - g\,\frac{\partial \varphi}{\partial n}\right) \mathrm{d}S. \tag{28}$$

The function g will, as before (when considering the diffraction problem), be defined as follows: this function satisfies the Helmholtz equation

$$(\Delta + k^2)g = -4\pi\delta(\mathbf{r} - \mathbf{r_0})\,, \tag{29}$$

where the right-hand side contains the density of a unit point source. We also require that the function g satisfy the zero boundary conditions on the screen surface:

$$g|_S = 0\,. \tag{30}$$

For a flat screen, the function g has the form (14), (14a). With allowance for (29), relation (28) has the form

$$-4\pi\varphi(\mathbf{r_0}) = \int_V g(\Delta + k^2)\varphi\,\mathrm{d}V - \int_{S'} \varphi\,\frac{\partial g}{\partial n}\,\mathrm{d}S\,. \tag{31}$$

We now substitute the value of the quantity $(\Delta + k^2)\varphi$ from formula (26) into formula (31) to obtain

$$\varphi_\omega(\mathbf{r}_0) = \frac{1}{4\pi}\int_{S'} \varphi_\omega(\mathbf{r})\,\frac{\partial g(\mathbf{r}, \mathbf{r}_0)}{\partial n}\,\mathrm{d}S + \int_V g(\mathbf{r}, \mathbf{r}_0) s_\omega(\mathbf{r})\,\mathrm{d}V\,. \tag{32}$$

We recall here that φ_ω is the Fourier component of the potential $\varphi(x, y, z, t)$ and s_ω is the Fourier component of the function $s(x, y, z, t)$ that determines the source density [see equations (25) and (26)]. The function g must also have the subscript ω since it is specified by equation (26) which is valid for waves of frequency ω. In the derivation of formula (32), we omitted the subscript ω and will omit it as a rule in what follows, but one should remember that we always mean an alternating field of frequency ω unless otherwise specified.

Formula (32) shows that the potential φ of the wave field in a volume V is described by two summands of different nature. The first summand (the integral over the aperture area S') has the same form as the scattered field has in the classical Fresnel – Huygens – Kirchhoff theory [see formula (12)]. However, one should bear in mind that in the case of diffraction radiation, φ is the potential of a moving (not resting, as in the classical theory of diffraction) radiation source. The potential φ_ω under the sign of the surface integral in formula (32) may be said to describe the field generated by the source motion outside the volume V. Accordingly, the first summand in formula (32) specifies the part of the field in the volume V due to diffraction (by the aperture S') of the field generated by the charge motion outside the volume V. We will further consider a simple example, which will help us to clarify the physical meaning of the first summand.

The second summand describes the field generated by the source motion in the volume V. If the moving source does not get into the volume V but only moves on one side of the screen outside the volume V, the density s_ω in the volume V is equal to zero, and therefore the second term in expression (32) vanishes. Then the whole field that has penetrated into the volume V is solely described by the first summand (the aperture surface integral) on the right-hand side of formula (32).

Suppose a source moving at a constant velocity crosses the screen plane (i.e., the plane $x = 0$) and flies into the volume V. In its further motion, the source moves away from the screen. Let us divide the source path into two parts of which one is outside and the other is inside the volume V. The part of the trajectory lying outside the volume V will be called exterior and the part inside the volume V interior. Then the first term in formula (32) describes the part of the field in the volume V that is due to the source motion along the exterior portion of the trajectory: the source seemed to move on the exterior of the trajectory up to the intersection point with the screen plane and then to stop instantaneously at this point without further motion. The radiation occurring according to this law of motion underwent diffraction by the screen apertures and penetrated into the volume V. The second term on the right-hand side of formula (32) describes the field in the volume V generated by the source motion along the interior region of the trajectory: the source seemed to be primarily at rest at the intersection point with the screen plane and then to be instantaneously accelerated to move along the interior region of the trajectory. This also yields radiation, which interferes with that that was excited by the source moving outside the volume V and penetrated the volume V through the screen apertures. But if a source is moving uniformly, the volume V must also contain a nonradiated field (the so-called entrained field, which is transported by the source in the case of a uniform motion). This field is also described by the second summand in formula (32).

At small distances from the transition point, the transported field strongly interferes with radiation and the total field cannot be decomposed into summands corresponding to radiation and to the self-field. But at sufficiently large distances from the transition point (at distances exceeding the path of formation[7]), such a decomposition becomes possible. Then the radiation field and the transported field can be considered separately. In particular, if the observation point is taken rather far from the screen, one can find the expression for the radiated field, which follows from the general formula (32).

At large distances from the screen, the first summand (the area integral) in formula (32) assumes a form exactly analogous to formula (23) with the only difference that, instead of the free field $f_\omega(\mathbf{r})$ dealt with in formula (23), the potential $f_\omega(\mathbf{r})$ of a moving source is now considered. Designating the first summand in (32) by $\varphi_\omega^{(1)}$, we arrive at

$$\varphi_\omega^{(1)} = -\frac{\mathrm{i}k}{2\pi}\,\frac{\exp(\mathrm{i}kr)}{r}\int_{S'} \varphi_\omega(\mathbf{r}')\exp(-\mathrm{i}\mathbf{k}\mathbf{r}')\,\cos\theta\,\mathrm{d}S\,. \tag{33}$$

The integral is taken over the aperture area S'. Formula (33) holds provided that the distance r is large compared to the

[7] Frank I M *Izv. Akad. Nauk SSSR, Ser. Fiz.* **3** 2 (1943).

values $|\mathbf{r}'|$ in the integration domain. The vector $\mathbf{k}$ has the magnitude $k = \omega/c$ and is aligned to the observation point from the screen region over which the integration is carried out in (33).

The second summand (the volume integral) in formula (32) will be designated $\varphi_\omega^{(2)}$. At large distances from the screen (and from the region in which radiation occurs), this summand takes the form

$$\varphi_\omega^{(2)} = \frac{\exp(\mathrm{i}kr)}{r} \int_V s_\omega(\mathbf{r}') \left[\exp(-\mathrm{i}\mathbf{k}\mathbf{r}') - \exp(-\mathrm{i}\mathbf{k}\hat{\mathbf{r}}') \right] \mathrm{d}V'. \tag{34}$$

If only the first exponent $\exp(-\mathrm{i}\mathbf{k}\mathbf{r}')$ is taken into account in the brackets in the integrand while the second is omitted, we obtain an expression for the potential corresponding to the source motion in an unlimited space. The second exponent $\exp(-\mathrm{i}\mathbf{k}\hat{\mathbf{r}}')$ in brackets in the integrand of (34) allows for the existence of the adopted boundary conditions, i.e., the vanishing of the Green's function g on the screen surface. The first exponent may be said to give the radiation of the source, and the second, the radiation of its mirror image.

To summarize the discussion, we can say that in the volume V at large distances from the region adjoining the point at which the moving source crossed the screen plane and flew into the volume, there exists a spherical radiation wave diverging from this region. This wave is described by the sum of expressions $\varphi_\omega^{(1)}$ (33) and $\varphi_\omega^{(2)}$ (34). Furthermore, there also exists a nonradiated field transported together with the source. But it falls off faster than $1/r$, and at large enough distances from the source trajectory is negligibly small compared to the radiation field. However, at small distances from the screen the transported field strongly interferes with the radiated one, and therefore the total field is not amenable to a division into radiated and transported. The notions of a 'small distance' and a 'large distance' are not absolute categories. In the given problem, there is a characteristic length l_f, i.e., the path of radiation formation introduced by I M Frank:

$$l_f = \frac{v}{\omega - \mathbf{k}\mathbf{v}}\,, \tag{35}$$

where $\mathbf{v}$ is the source velocity and ω and $\mathbf{k}$ are the frequency and the wave vector of the radiated wave. The physical meaning of the quantity (35) is that the path of formation determines the distance at which the interference between the radiated wave and the self-field of the uniformly moving particle is significant. By 'large distances,' we imply those that appreciably exceed l_f. Consequently, 'small distances' are small compared to l_f.

4. Radiation of a small source passing through a round aperture in a flat screen

Let a flat opaque screen be located in the yz plane of a rectilinear Cartesian coordinate system. In the screen, there is a round aperture of radius a centered at the origin. A field source moves along the x axis at a constant velocity v. In electrodynamics the source is a charged particle, while in acoustics it is a small body moving in a gas. The source approaches the screen from the side of negative x values, passes through the center of the round aperture and moves away from the screen to the right along the x axis. It is required that the resulting radiation be determined.

What has been said above implies that at large distances from the screen the radiation field potential is equal to the sum of expressions (33) and (34):

$$\begin{aligned}\varphi_\omega(r \to \infty) &= \varphi_\omega^{(1)} + \varphi_\omega^{(2)} \\ &= \frac{\exp(\mathrm{i}kr)}{r} \Bigg[-\frac{\mathrm{i}k}{2\pi} \int_{S'} \varphi_\omega(\mathbf{r}') \exp(-\mathrm{i}\mathbf{k}\mathbf{r}') \cos\theta \,\mathrm{d}S \\ &\quad + \int_V s_\omega(\mathbf{r}') \big(\exp(-\mathrm{i}\mathbf{k}\mathbf{r}') - \exp(-\mathrm{i}\mathbf{k}\hat{\mathbf{r}}') \big) \,\mathrm{d}V' \Bigg].\end{aligned} \tag{36}$$

The expression in square brackets will be called the amplitude of the spherical wave. Obviously, the magnitude of the amplitude of a radiated wave depends on the direction of the wave vector $\mathbf{k}$. However, since the distance r at which the radiation field is determined is sufficiently large, the wave at the observation point may be thought of as plane and having the wave vector $\mathbf{k}$ aligned from the origin to the observation point. For that reason, the expression in square brackets in formula (36) can also be thought of as the amplitude of a plane wave with the corresponding direction of the wave vector.

Expression (36) for the radiation field can be written somewhat differently. Note that if the aperture size is infinitely increased, then the screen vanishes in the limit and we obtain a homogeneous space with a uniformly moving source. Radiation is known to be absent in this case. But on the other hand, if the aperture size increases, then in the limit the integral over the aperture area in (36) extends to the entire surface $x = 0$. That is why the equality

$$\begin{aligned}&-\frac{\mathrm{i}k}{2\pi} \int_S \varphi_\omega(\mathbf{r}') \exp(-\mathrm{i}\mathbf{k}\mathbf{r}') \cos\theta \,\mathrm{d}S \\ &\qquad + \int_V s_\omega(\mathbf{r}') \left[\exp(-\mathrm{i}\mathbf{k}\mathbf{r}') - \exp(-\mathrm{i}\mathbf{k}\hat{\mathbf{r}}') \right] \mathrm{d}V' = 0\end{aligned}$$

must hold, in which S is the total screen surface:

$$S = S' + S''$$

(S' is the aperture area and S'' is the area of the nontransparent part of the screen). The above relation can be rewritten as follows:

$$\begin{aligned}&-\frac{\mathrm{i}k}{2\pi} \int_{S'} \varphi_\omega(\mathbf{r}') \exp(-\mathrm{i}\mathbf{k}\mathbf{r}') \cos\theta \,\mathrm{d}S \\ &\qquad - \frac{\mathrm{i}k}{2\pi} \int_{S''} \varphi_\omega(\mathbf{r}') \exp(-\mathrm{i}\mathbf{k}\mathbf{r}') \cos\theta \,\mathrm{d}S \\ &\qquad + \int_V s_\omega(\mathbf{r}') \left[\exp(-\mathrm{i}\mathbf{k}\mathbf{r}') - \exp(-\mathrm{i}\mathbf{k}\hat{\mathbf{r}}') \right] \mathrm{d}V' = 0\,,\end{aligned}$$

whence

$$\begin{aligned}&-\frac{\mathrm{i}k}{2\pi} \int_{S'} \varphi_\omega(\mathbf{r}') \exp(-\mathrm{i}\mathbf{k}\mathbf{r}') \cos\theta \,\mathrm{d}S + \\ &\qquad + \int_V s_\omega(\mathbf{r}') \left[\exp(-\mathrm{i}\mathbf{k}\mathbf{r}') - \exp(-\mathrm{i}\mathbf{k}\hat{\mathbf{r}}') \right] \mathrm{d}V' = \\ &\qquad = \frac{\mathrm{i}k}{2\pi} \int_{S''} \varphi_\omega(\mathbf{r}') \exp(-\mathrm{i}\mathbf{k}\mathbf{r}') \cos\theta \,\mathrm{d}S.\end{aligned}$$

Thus, the right-hand side of formula (36), which determines the radiation field, can be written as a surface integral over the opaque portion of the screen.

It can be seen from relation (36) that to calculate the amplitude of a radiated wave, one should know the Fourier component φ_ω of the source potential over the aperture area and the Fourier component s_ω of the moving source density. The functions $\varphi(x,y,z,t)$ and $s(x,y,z,t)$ are related by equation (25):

$$\frac{\partial^2\varphi}{\partial x^2}+\frac{\partial^2\varphi}{\partial y^2}+\frac{\partial^2\varphi}{\partial z^2}-\frac{1}{c^2}\,\frac{\partial^2\varphi}{\partial t^2}=-4\pi s(x,y,z,t)\,.$$

The density $s(x,y,z,t)$ of a small uniformly moving source can be written in the form

$$s(x,y,z,t)=q\delta(x-vt)\delta(y)\delta(z)\,, \tag{37}$$

where the coefficient q characterizes the physical properties of the source. For example, if the source is a flying particle possessing an electric charge, then q gives the value of this charge and the function φ is a scalar potential. If we consider the problem of a small body moving in a gas, then q is the value of the resistance force experienced by the moving particle and the function φ allows us to determine the field of pressures in the gas. In the latter case, as was shown by V P Dokuchaev[8], the source density $\delta(x-vt)$ in expression (37) should be replaced by $(\partial/\partial x)\delta(x-vt)$. Using expression (37) for the source density in what follows, we will understand q as the magnitude of the electric charge.

We will present the solution of equation (25) for the case when the right-hand side is given in the form (37). We will proceed not from the explicit form of the solution for the potential φ as a function of coordinates and time, but write the expansion of the solution as a Fourier time integral. Such a representation of the solution is more convenient for us because the whole preceding theory holds for components of the Fourier series corresponding to a certain frequency ω.

The solution of equation (25) with the right-hand side (37) can be written as follows:

$$\varphi(x,y,z,t)=\frac{q}{\pi v}\int\exp(-\mathrm{i}\omega t)\exp\left(\mathrm{i}\,\frac{\omega}{v}x\right)\times K_0\left(\frac{|\omega|}{v}\sqrt{1-\beta^2}\,\rho\right)\mathrm{d}\omega\,. \tag{38}$$

Here,

$$\rho=\sqrt{y^2+z^2}\,, \tag{39}$$

β is the ratio of the source velocity v to the characteristic velocity c entering into the wave equation (25) (in an electromagnetic problem, c is the velocity of light in a vacuum), and $K_0(x)$ is a modified Bessel function of the second kind (a MacDonald function).

Comparison with formulas (27) immediately allows writing the expression for φ_ω:

$$\varphi_\omega(x,y,z)=\frac{q}{\pi v}\exp\left(\mathrm{i}\frac{\omega}{v}\,x\right)K_0\left(\frac{|\omega|}{v}\sqrt{1-\beta^2}\,\rho\right). \tag{40}$$

The MacDonald function $K_0(x)$ possesses the following properties:

For small x, we have

$$K_0(x)=-\ln x\,,\qquad x\ll 1\,;$$

and for large values of the argument,

$$K_0(x)=\sqrt{\frac{\pi}{2x}}\exp(-x)\,,\qquad x\gg 1\,.$$

Thus, the field of a charged particle moving uniformly in a vacuum attenuates according to an exponential law with distance from the trajectory:

$$\varphi_\omega(x,\rho)\approx\frac{q}{\sqrt{2\pi v|\omega|\rho\sqrt{1-\beta^2}}}\times\exp\left(\mathrm{i}\frac{\omega}{v}x\right)\exp\left(-\frac{|\omega|}{v}\sqrt{1-\beta^2}\,\rho\right);$$
$$\frac{|\omega|}{v}\sqrt{1-\beta^2}\,\rho\gg 1\qquad(\rho=\sqrt{y^2+z^2})\,. \tag{41}$$

The dependence of the field on the coordinate x is wavelike — a plane wave with a wave vector $k_x^{(0)}=\omega/v$ propagates along the x axis. Since the charge velocity v is smaller than the velocity of light c, the quantity $k_x^{(0)}$ is larger than the wave vector of a free electromagnetic wave $k=\omega/c$.

In connection with the asymptotics (41), we should mention the following fact. Suppose a free wave of the form

$$\varphi\sim\exp\left[\mathrm{i}(k_x x+k_\rho\rho)\right] \tag{42}$$

propagates in a medium. Obviously, the components k_ρ and k_x of the wave vector in such a wave must satisfy the relation $k_x^2+k_\rho^2=\omega^2/c^2$. Now let the equality $k_x=k_x^{(0)}=\omega/v$ hold. Then, for k_ρ we obtain $k_\rho^2=\omega^2/c^2-\omega^2/v^2=(-\omega^2/v^2)(1-\beta^2)$. Since we assume the velocity v of the field source not to exceed the characteristic wave velocity c, i.e., $\beta<1$, the square of the radial component k_ρ of the wave vector appears to be negative, i.e., the radial component k_ρ itself is imaginary: $k_\rho=(\mathrm{i}\omega/v)(1-\beta^2)^{1/2}$. The substitution of this k_ρ value into expression (42) for the wave yields the same attenuation law with increasing ρ as expression (41) does. Expression (41) has a characteristic feature. Suppose the source velocity v exceeds the velocity c of wave propagation in a medium: $v>c$. Then, we have $\beta=v/c>1$. Accordingly, $(1-v^2/c^2)^{1/2}$ becomes an imaginary quantity: $(1-\beta^2)^{1/2}=\pm\mathrm{i}(\beta^2-1)^{1/2}$. In this case, formula (41), which determines the dependence of the field on coordinates at a large distance from the source trajectory, leads to the following coordinate dependence of the field (constant factors are omitted):

$$\varphi_\omega(x,\rho)\approx\frac{1}{\sqrt{r}}\exp\left(\mathrm{i}\frac{\omega}{v}x\right)\exp\left(\mathrm{i}\frac{|\omega|}{v}\sqrt{\beta^2-1}\,\rho\right). \tag{43}$$

Formula (43) implies that in the case $v>c$, a radiation wave exists at large distances from the source path. For sufficiently high ρ values, this wave can be considered plane. The wave vector of this wave has two components: $k_x=\omega/v$ along the x axis and $k_\rho=(\omega/v)(\beta^2-1)^{1/2}$ along the radius. The total value of the wave vector, as can be readily shown, is equal to ω/c, i.e., is the same as that of a free wave of frequency ω. The wave vector and the source trajectory make

[8] See also Bolotovskiĭ B M *Tr. Fiz. Inst Akad. Nauk SSSR* **140** 95 (1982). See Dokuchaev V P *Zh. Exp. Teor. Fiz.* **43** 2 (8) (1962).

a certain angle ϑ such that

$$\cos\vartheta = \frac{k_x}{k} = \frac{c}{v}\,. \tag{44}$$

The angle ϑ may be real only if the inequality $v > c$ holds, i.e., provided the source velocity exceeds the characteristic wave velocity in the medium. Certainly, if the constant c signifies the velocity of light in a vacuum, the inequality $v > c$ cannot be fulfilled. If we are dealing with a charged particle moving in a refractive medium in which the velocity of light is lower than in a vacuum, the inequality $v > c$ may hold. It may also be satisfied for a body moving in a gas with a supersonic velocity.

Expression (43) describes Vavilov–Cherenkov radiation if the quantity c in the wave equation (25) signifies the velocity of light in a refractive medium (or the Mach effect if we are dealing with the motion of a body in a gas and c is the sound velocity). Obviously, in this case the source outruns its own field and the diffraction radiation problem has its peculiarities. We will assume the source velocity not to exceed the wave velocity in the medium, and, therefore, the field φ_ω is determined by expression (40). This expression should be substituted into formula (36) that determines the radiation field.

To completely determine the diffraction radiation potential φ_ω, one also has to know the Fourier component of the source density $s_\omega(x, y, z)$

$$s_\omega(x, y, z) = \frac{1}{2\pi}\int_{-\infty}^{\infty} s(x, y, z, t)\exp(\mathrm{i}\omega t)\,\mathrm{d}t\,.$$

The substitution of expression (37) for $s(x, y, z, t)$ into this equality gives

$$s_\omega(x, y, z) = \frac{q}{2\pi v}\exp\left(\mathrm{i}\frac{\omega}{v}x\right)\delta(y)\delta(z)\,. \tag{45}$$

Thus, to determine the potential of the diffraction radiation occurring when a charge flies through a round aperture in the screen, one should substitute expression (40) for φ_ω and expression (45) for s_ω into the general formula (36). Then formula (36) for the radiation potential takes the form

$$\begin{aligned}\varphi_\omega(r\to\infty) = {} & -q\,\frac{\mathrm{i}k}{2\pi^2 v}\,\frac{\exp(\mathrm{i}kr)}{r}\int_{S'} K_0\left(\frac{\omega}{v}\sqrt{1-\beta^2}\,\rho\right)\\ & \times\exp\left[(-\mathrm{i}(k_y y + k_z z)\right]\cos\theta\,\mathrm{d}y\,\mathrm{d}z\\ & + \frac{q}{2\pi v}\,\frac{\exp(\mathrm{i}kr)}{r}\int_V\left[\exp(-\mathrm{i}\mathbf{k}\mathbf{r}') - \exp(-\mathrm{i}\mathbf{k}\hat{\mathbf{r}}')\right]\\ & \times\exp\left(\mathrm{i}\frac{\omega}{v}x'\right)\delta(y')\delta(z')\,\mathrm{d}x'\,\mathrm{d}y'\,\mathrm{d}z'\,.\end{aligned} \tag{46}$$

Here, $r = \sqrt{x^2 + y^2 + z^2}$ is the distance between the observation point and the center of the aperture and $\rho = \sqrt{y^2 + z^2}$ is the distance between the observation point and the charge trajectory (the x axis). Recall that the first summand in formula (46), i.e., the integral over the aperture area S', describes the radiation due to the motion of the source when it is approaching the screen and then has passed (with allowance for diffraction) through the aperture. The second summand, i.e., the integral over the volume V, describes the radiation due to the motion of the source when the latter has flown through the aperture.

We first calculate the integral over the aperture area:

$$I_s = \int_{S'} K_0\left(\frac{\omega}{v}\sqrt{1-\beta^2}\,\rho\right)\exp\left[-\mathrm{i}(k_y y + k_z z)\right] \times\cos\theta\,\mathrm{d}x\,\mathrm{d}y\,\mathrm{d}z\,. \tag{47}$$

The exponent in the integrand contains a scalar product of the vector $\rho = (y, z)$ and the vector $\varkappa = (k_y, k_z)$. Both vectors lie in the screen plane (i.e., in the yz plane). Obviously, $|\varkappa| = (\omega/c)\sin\theta$, $|\rho| = \sqrt{y^2 + z^2}$. Hence, we can write expression (47) as follows:

$$I_s = \int_{S'} K_0\left(\frac{\omega}{v}\sqrt{1-\beta^2}\,\rho\right)\exp(-\mathrm{i}\varkappa\rho\cos\phi)\cos\theta\,\rho\,\mathrm{d}\rho\,\mathrm{d}\phi\,, \tag{48}$$

where ϕ is the angle between the vectors $\varkappa$ and ρ. Integration over ρ is carried out in the limits from zero to a (recall that a is the screen aperture radius) and integration over ϕ is conducted in the limits from zero to 2π.

To begin, we will integrate over ϕ. To do this, we use the relation

$$\int_0^{2\pi}\exp(\mathrm{i}x\cos\phi)\,\mathrm{d}\phi = 2\pi J_0(x)\,,$$

where J_0 is a zero-order Bessel function. We obtain

$$I_s = 2\pi\int_0^a K_0\left(\frac{\omega}{v}\sqrt{1-\beta^2}\,\rho\right)J_0\left(\frac{\omega}{c}\sin\theta\,\rho\right)\cos\theta\,\rho\,\mathrm{d}\rho. \tag{49}$$

Integration over ρ gives

$$\begin{aligned}I_s = {} & 2\pi\frac{v^2}{\omega^2}\,\frac{1}{1-(v^2/c^2)\cos^2\theta}\left[a\frac{\omega}{c}\sin\theta\,J_1\left(a\frac{\omega}{c}\sin\theta\right)\right.\\ & \times K_0\left(a\frac{\omega}{v}\sqrt{1-\beta^2}\right) - a\frac{\omega}{v}\sqrt{1-\beta^2}\,J_0\left(a\frac{\omega}{c}\sin\theta\right)\\ & \left.\times K_1\left(a\frac{\omega}{v}\sqrt{1-\beta^2}\right) + 1\right]\cos\theta\,.\end{aligned} \tag{50}$$

Here, $J_1(x) = -J_0{}'(x)$, and $K_1(x) = -K_0{}'(x)$.

Consequently, the first summand in formula (46) is written in the form

$$\begin{aligned}\varphi_1 = {} & -\frac{\mathrm{i}q}{\pi\omega}\,\frac{v}{c}\,\frac{\exp(\mathrm{i}kr)}{r}\,\frac{1}{1-(v^2/c^2)\cos^2\theta}\\ & \times\left[a\frac{\omega}{c}\sin\theta\,J_1\left(a\frac{\omega}{c}\sin\theta\right)K_0\left(a\frac{\omega}{v}\sqrt{1-\beta^2}\right)\right.\\ & \left.- a\frac{\omega}{v}\sqrt{1-\beta^2}\,J_0\left(a\frac{\omega}{c}\sin\theta\right)K_1\left(a\frac{\omega}{v}\sqrt{1-\beta^2}\right)+1\right]\cos\theta.\end{aligned} \tag{51}$$

It can easily be shown that if the aperture radius a tends to zero, the part of the potential expressed by the term φ_1 vanishes. If the radius a tends to infinity, we obtain from formula (51)

$$\varphi_1 = -\frac{\mathrm{i}q}{\pi\omega}\,\frac{v}{c}\,\frac{\exp(\mathrm{i}kr)}{r}\,\frac{1}{1-(v^2/c^2)\cos^2\theta}\cos\theta\ (a\to\infty). \tag{52}$$

The latter result vividly shows the difference between two phenomena: diffraction of a free wave by a screen aperture and diffraction of the field of a uniformly moving source by the same screen. If a free electromagnetic wave is incident on a screen aperture, then, with the aperture radius tending to infinity, the scattered field in the volume V disappears and only the incident wave remains. If the field of a uniformly moving source is incident on a screen aperture, then, as can be seen from formula (52), with the aperture radius tending to infinity, a field arises in the volume V which differs radically from the incident field. Indeed, formula (52) for a scattered field describes an undamped spherical wave, whereas the incident field has the form (40), i.e., attenuates exponentially with distance from the source trajectory. Hence, the presence of a screen is in a sense equivalent to a nonuniform motion — radiation is observed in both cases. We will show below that these two phenomena may actually be related.

Curve *1* in Fig. 3 represents the scattered radiation intensity for normal incidence of a plane wave onto a round aperture in a screen. Curve *2* depicts the intensity of diffraction radiation generated by a charge passing through a round aperture of the same radius. One and the same observation angle $\theta = 1/\gamma$ is taken for comparison. The maximum intensity values are normalized to unity in both cases. The diffraction radiation intensity can be seen to fall faster than the scattered radiation intensity upon diffraction.

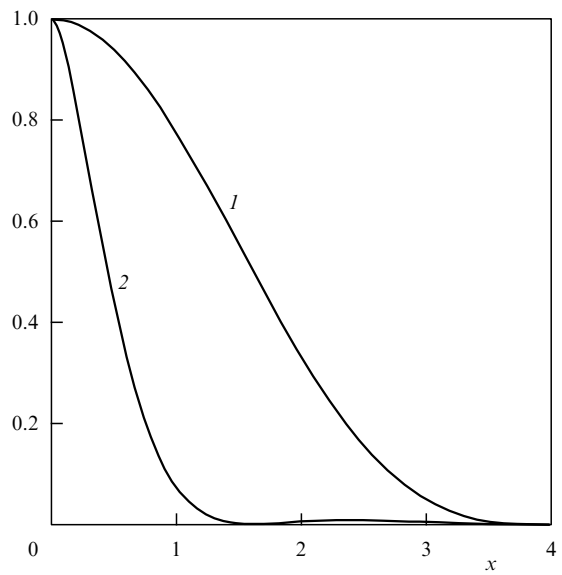

Figure 3. Comparative characteristics of radiation on an aperture in a flat screen depending on the parameter $x = ka/\gamma$ at an observation angle $\theta = 1$: *1*, scattered light intensity for normal incidence of a plane wave onto a round aperture; *2*, intensity of diffraction radiation of a point charge upon its passage through the center of a round aperture.

We now proceed to the calculation of the summand in (46) containing the integral over the volume V. This summand will be designated by φ_2. Then, we have

$$\varphi_2 = \frac{q}{2\pi v}\,\frac{\exp(\mathrm{i}kr)}{r}\int_V \left[\exp(-\mathrm{i}\mathbf{k}\mathbf{r}') - \exp(-\mathrm{i}\mathbf{k}\hat{\mathbf{r}}')\right] \times \exp\left(\mathrm{i}\frac{\omega}{v}x'\right)\delta(y')\delta(z')\,\mathrm{d}x'\,\mathrm{d}y'\,\mathrm{d}z = \frac{\mathrm{i}q}{\pi\omega}\,\frac{v}{c}\,\frac{\exp(\mathrm{i}kr)}{r}\,\frac{1}{1-(v^2/c^2)\cos^2\theta}\cos\theta\,. \tag{53}$$

Comparison of formulas (53) and (52) shows that the summand φ_2 is equal in magnitude and opposite in sign to the limiting value of the summand φ_1 in the limit $a \to \infty$.

The complete expression for the radiation field potential in the volume V at large distances from the screen plane is equal to the sum of φ_1 and φ_2:

$$\varphi_\omega = -\frac{\mathrm{i}q}{\pi\omega}\,\frac{v}{c}\,\frac{\exp(\mathrm{i}kr)}{r}\,\frac{1}{1-(v^2/c^2)\cos^2\theta} \times \left[a\frac{\omega}{c}\sin\theta\, J_1\left(a\frac{\omega}{c}\sin\theta\right)K_0\left(a\frac{\omega}{v}\sqrt{1-\beta^2}\right) - a\frac{\omega}{v}\sqrt{1-\beta^2}\,J_0\left(a\frac{\omega}{c}\sin\theta\right)K_1\left(a\frac{\omega}{v}\sqrt{1-\beta^2}\right)\right]\cos\theta\,. \tag{54}$$

If the aperture radius a increases, then, in the limit $a \to \infty$, the radiation field potential (54) tends to zero. This result is readily understood from physical considerations: If the aperture radius increases without limit, the screen in fact vanishes and in the limit we have the problem of uniform source motion in a homogeneous space in the absence of a screen. In this case, as has already been said, there is no radiation at all.

In the opposite case of a continuous shield (when the limiting transition $a \to 0$ occurs), we have

$$\varphi_\omega = \frac{\mathrm{i}q}{\pi\omega}\,\frac{v}{c}\,\frac{\exp(\mathrm{i}kr)}{r}\,\frac{1}{1-(v^2/c^2)\cos^2\theta}\cos\theta\,. \tag{55}$$

This expression yields the potential of transition radiation generated by a charged particle moving at a constant velocity along the x axis when it crosses an opaque screen located in the plane $x = 0$, flies into the volume V, and moves farther in the volume V along the x axis away from the wall.

We now turn from the potential to the radiation fields. In this connection, we recall the notation of the equation for field potentials in electrodynamics:

$$\left(\Delta - \frac{1}{c^2}\,\frac{\partial^2}{\partial t^2}\right)\mathbf{A} = \frac{4\pi}{c}\mathbf{j}\,;$$
$$\left(\Delta - \frac{1}{c^2}\,\frac{\partial^2}{\partial t^2}\right)\varphi = 4\pi s\,. \tag{56}$$

Here, $\mathbf{A}$ is the vector potential, φ is the scalar potential, $\mathbf{j}$ is the current density, and s is the charge density. In our case (a uniform motion of a point charge along the x axis), the charge density s has the form (37) and the vector of the current density $\mathbf{j}$ has only one nonzero component $j_x = vs$. The field of a charge passing along the x axis of a round aperture in the screen possesses axial symmetry. The form of equations (56) implies that if the solution of equation (56) for φ is known, the solution of the equation for the vector potential $\mathbf{A}$ is expressed in terms of the scalar potential as follows:

$$\mathbf{A} = \frac{\mathbf{v}}{\mathbf{c}}\varphi\,,$$

that is, the only nonzero component of the vector potential $\mathbf{A}$ in our case is the component

$$A_z = \frac{v}{c}\varphi\,. \tag{57}$$

Hence, using relations (54) and (57), we can immediately write that part of the vector potential $\mathbf{A}$ that describes the radiation

of a point charge passing through a round aperture:

$$A_z = -\frac{\mathrm{i}q}{\pi\omega}\,\frac{v^2}{c^2}\,\frac{\exp(\mathrm{i}kr)}{r}\,\frac{1}{1-(v^2/c^2)\cos^2\theta}$$
$$\times\left[a\frac{\omega}{c}\sin\theta\,J_1\left(a\frac{\omega}{c}\sin\theta\right)K_0\left(a\frac{\omega}{v}\sqrt{1-\beta^2}\right)\right.$$
$$\left.-\,a\frac{\omega}{v}\sqrt{1-\beta^2}\,J_0\left(a\frac{\omega}{c}\sin\theta\right)K_1\left(a\frac{\omega}{v}\sqrt{1-\beta^2}\right)\right]\cos\theta. \tag{58}$$

Knowing the expression for the vector potential, we employ the usual rules to find the magnetic field:

$$\mathbf{H} = \mathrm{rot}\,\mathbf{A} = \mathrm{i}[\mathbf{k},\mathbf{A}]\,.$$

The magnetic field has a single nonzero component H_φ:

$$H_\varphi = \frac{q}{\pi}\,\frac{v^2}{c^3}\,\frac{\exp(\mathrm{i}kr)}{r}\,\frac{1}{1-(v^2/c^2)\cos^2\theta}$$
$$\times\left[a\frac{\omega}{c}\sin\theta\,J_1\left(a\frac{\omega}{c}\sin\theta\right)K_0\left(a\frac{\omega}{v}\sqrt{1-\beta^2}\right)\right.$$
$$\left.-\,a\frac{\omega}{v}\sqrt{1-\beta^2}\,J_0\left(a\frac{\omega}{c}\sin\theta\right)K_1\left(a\frac{\omega}{v}\sqrt{1-\beta^2}\right)\right]\sin\theta\,\cos\theta. \tag{59}$$

The electric field of a radiated wave lies in the plane drawn through the radius vector of the observation point and the line of source motion (the x axis). The vector of the electric field is equal in magnitude to the vector of the magnetic field H_φ. The intensity of radiation at a frequency ω at an angle θ into an element of solid angle $\mathrm{d}\Omega$ is written in the form

$$W_\omega(\theta)\,\mathrm{d}\Omega = c\left|H_\omega(\theta)\right|^2 r^2\,\mathrm{d}\Omega$$
$$= \frac{q^2}{\pi^2}\,\frac{v^4}{c^5}\,\frac{1}{\left(1-(v^2/c^2)\cos^2\theta\right)^2}$$
$$\times\left[a\frac{\omega}{c}\sin\theta\,J_1\left(a\frac{\omega}{c}\sin\theta\right)K_0\left(a\frac{\omega}{v}\sqrt{1-\beta^2}\right)\right.$$
$$\left.-\,a\frac{\omega}{v}\sqrt{1-\beta^2}\,J_0\left(a\frac{\omega}{c}\sin\theta\right)K_1\left(a\frac{\omega}{v}\sqrt{1-\beta^2}\right)\right]^2$$
$$\times\sin^3\theta\cos^2\theta\,\mathrm{d}\theta\,\mathrm{d}\varphi\,. \tag{60}$$

Here, φ is the azimuthal angle. In view of the axial symmetry, the radiation intensity does not depend on φ. Therefore, the integration over φ is reduced to a multiplication by 2π.

If the aperture radius a tends to infinity, the radiation intensity tends to zero, as it should. If, on the contrary, $a \to 0$, formula (60) gives transition radiation due to the charged particle's escape from a bulk screen:

$$W_\omega(\theta)\,\mathrm{d}\Omega = \frac{q^2}{\pi^2}\,\frac{v^4}{c^5}\,\frac{1}{\left(1-(v^2/c^2)\cos^2\theta\right)^2}\sin^3\theta\cos^2\theta\,\mathrm{d}\theta\,\mathrm{d}\varphi. \tag{61}$$

For this case, there exists an exact solution of the electrodynamic problem (see footnote on p. 1), which implies the following expression for the transition radiation intensity on the boundary of an ideal conductor:

$$W_\omega(\theta)\,\mathrm{d}\Omega = \frac{q^2v^2\sin^3\theta\,\mathrm{d}\theta\,\mathrm{d}\varphi}{\pi^2c^3\left[1-(v^2/c^2)\cos^2\theta\right]^2}\,. \tag{62}$$

Comparison of formulas (61) and (62) shows that the approximate formula for radiation intensity derived from the scalar theory differs from the exact solution of the vector problem by the factor $(v^2/c^2)\cos^2\theta$. From this, one can deduce the validity conditions for the scalar theory of diffraction radiation. The conditions should be such that this extra factor be close to unity. First, the velocity of the particle passing through an aperture should be close to the velocity of light and, second, only small radiation angles should be considered. In practice, it suffices that the first condition alone be fulfilled: formulas (61) and (62) imply that if the velocity of the particle is close to the velocity of light, the bulk radiation is concentrated in the region of small angles

$$\theta \approx \sqrt{1-\frac{v^2}{c^2}} = \frac{1}{\gamma} \qquad (\gamma \gg 1)\,. \tag{63}$$

Here, $\gamma = \left(\sqrt{1-v^2/c^2}\right)^{-1} = E/mc^2$ is the quantity termed the Lorentz factor. It shows the factor by which the energy of an emitting particle exceeds its rest energy. The condition $\gamma \gg 1$ may be regarded as the validity condition for our approach, which leads to expression (36) for the diffraction radiation field. This condition can be clarified as follows. The theory of diffraction is formulated on the assumption that a free electromagnetic wave is incident on an aperture in the screen. The propagation velocity of this wave is equal to the velocity of light. On the other hand, the field of a uniformly moving charge in a free space propagates at the velocity of the charge, i.e., slower than free electromagnetic waves. That is why the field of a moving charge differs from the field of free electromagnetic waves, and the result of the interaction between this field and the screen may differ strongly from the picture given by the diffraction of free electromagnetic waves. But the closer the charge velocity to the velocity of light, the smaller the difference between the charge field and the field of free electromagnetic waves, and the more we can hope for the validity of the theory developed above. Henceforth, we assume, if not specified otherwise, that the velocity of a flying particle is close to the velocity of light, i.e., the Lorentz factor γ is large compared to unity.

We now consider in more detail expression (60) for diffraction radiation intensity. Let us first investigate the angular dependence. We begin with the factor

$$\frac{\sin^3\theta\cos^2\theta}{\left[1-(v^2/c^2)\cos^2\theta\right]^2} = \frac{\sin^3\theta\cos^2\theta}{[1-\beta^2\cos^2\theta]^2}$$

before the expression in square brackets in (60). For low values of the angle θ, we can expand $\cos\theta$ in powers of the argument and restrict ourselves to the first two terms of the series and also assume that $\sin\theta = \theta$. We arrive at

$$\frac{\theta^3}{[1-\beta^2\cos^2\theta]^2} = \frac{\theta^3}{[1-\beta^2+\theta^2]^2} = \frac{\theta^3}{[1/\gamma^2+\theta^2]^2}\,. \tag{64}$$

This factor takes high values in the region of angles $\theta \approx 1/\gamma$ (the maximum value is proportional to γ) and then, as θ increases, it falls as θ^{-4}.

Considering further formula (60), we now turn to the factor

$$\left[a\frac{\omega}{c}\sin\theta\, J_1\left(a\frac{\omega}{c}\sin\theta\right)K_0\left(a\frac{\omega}{v}\sqrt{1-\beta^2}\right)\right.$$
$$\left.-\,a\frac{\omega}{v}\sqrt{1-\beta^2}\,J_0\left(a\frac{\omega}{c}\sin\theta\right)K_1\left(a\frac{\omega}{v}\sqrt{1-\beta^2}\right)\right]^2. \quad (65)$$

In this expression, the argument of the Bessel functions J_0 and J_1 is a combination of the variables $a(\omega/c)\sin\theta$ and the argument of the MacDonald functions K_0 and K_1 is the combination $a(\omega/v)(1-\beta^2)^{1/2}$. But since factor (64) takes on large values when $\theta = 1/\gamma = (1-\beta^2)^{1/2}$, for a qualitative estimate of expression (65) one may assume that for high γ values the arguments of the Bessel functions and MacDonald functions are close to each other. Then, with allowance for the properties of the functions J_0, J_1 and K_0, K_1 for low and high values of the argument, we obtain that for low values of the argument (i.e., for $a(\omega/v)(1-\beta^2)^{1/2} \ll 1$) factor (65) is equal to unity, while for high values of the argument (i.e., for $a(\omega/v)(1-\beta^2)^{1/2} > 1$) expression (65) decreases exponentially with increasing argument, i.e., proportionally to the factor $\exp(-2a(\omega/v)(1-\beta^2)^{1/2})$. Obviously, the radiation intensity at corresponding frequencies decreases exponentially along with this factor. We can thus qualitatively determine the upper boundary of the radiation spectrum due to the passage of a charge along the axis of a round aperture in the screen. We define the boundary frequency as the frequency beginning with which the radiation intensity falls by an exponential law. Clearly, one can determine the boundary frequency on the order of magnitude by equating to unity the argument $a(\omega/v)(1-\beta^2)^{1/2}$ on which the functions K_0 and K_1 depend, because these particular functions begin falling exponentially with a further increase in the argument. Hence, for the boundary frequency ω_{bound} we take a frequency for which there holds the relation

$$a\frac{\omega_{\text{bound}}}{v}\sqrt{1-\beta^2} \approx 1\,, \quad (66)$$

whereby for the boundary frequency we obtain

$$\omega_{\text{bound}} \approx \frac{v}{a}\gamma\,. \quad (67)$$

Since, as was noted above, our consideration is valid for charge velocities v close to the velocity of light c, we can rewrite this relation as

$$\omega_{\text{bound}} \approx \frac{c}{a}\gamma\,. \quad (68)$$

Frequencies much higher than ω_{bound} are radiated with a negligible intensity. It follows from formula (67) that ω_{bound} is proportional to the particle energy (since the Lorentz factor γ is proportional to the energy). Even for macroscopic aperture sizes (say, $a = 1$ cm), beginning with a certain energy of an incident charged particle, visible light and a harder radiation may arise. In this connection, we note that for sufficiently high ω_{bound} values our consideration may become invalid. Indeed, if ω_{bound} is in the X-ray region, the boundary conditions accepted by us on the screen surface do not hold any more (a thin screen is perfectly penetrable to X-rays).

The boundary frequency corresponds to the boundary wavelength

$$\lambda_{\text{bound}} = \frac{2\pi c}{\omega_{\text{bound}}} = \frac{2\pi a}{\gamma}\,. \quad (69)$$

Waves with wavelengths much smaller than λ_{bound} are emitted with a negligibly low intensity. Note that since we assume the charge velocity to be close to the velocity of light, we may think that the Lorentz factor γ is much greater than unity. It then follows from formula (69) that the boundary wavelength is much smaller than the linear dimensions of the aperture, that is, one of the main conditions decisive in the validity of our consideration (the smallness of the wavelength compared to the aperture size) holds automatically.

We now fix the frequency ω and see how the loss W_ω (60) depends on the aperture radius a. It has been said above that as $a \to 0$, the expression for the loss gives the loss due to transition radiation, i.e., radiation that accompanies the a charged particle's escape from the bulk screen. In the opposite case, i.e., as $a \to 0$, the W_ω value exponentially tends to zero. But when we speak of small or large values of the radius a, we should specify a certain physical quantity compared to which the a values may be thought of as small (or large). Such a quantity in our case is $v\gamma/\omega = \lambda\gamma/2\pi$, where $\lambda = 2\pi c/\omega$ is the wavelength at the frequency ω. Indeed, the Fourier component of the scalar potential for the field of a charged particle uniformly moving in a vacuum is determined by relation (40)

$$\varphi_\omega(x,y,z) = \frac{q}{\pi v}\exp\left(\mathrm{i}\frac{\omega}{v}x\right)K_0\left(\frac{|\omega|}{v}\sqrt{1-\beta^2}\,\rho\right).$$

The expression for the Fourier component of the vector potential can be obtained by multiplying the latter relation by $\beta = v/c$. By doing so, we obtain

$$A_z(x,y,z) = \frac{q}{\pi c}\exp\left(\mathrm{i}\frac{\omega}{v}x\right)K_0\left(\frac{|\omega|}{v}\sqrt{1-\beta^2}\,\rho\right).$$

It has already been said (see the text between formulas (40) and (41)) that the function K_0 falls exponentially with increasing argument. We may roughly assume qualitatively that the Fourier component of the field of a uniformly moving charge is nonzero at a distance ρ from the line of motion if the inequality

$$\frac{\omega}{v}\sqrt{1-\beta^2}\rho < 1$$

holds and becomes negligible if the inverse inequality

$$\frac{\omega}{v}\sqrt{1-\beta^2}\rho > 1$$

is fulfilled. Therefore, if a charge flies through a round aperture of radius a, two cases are possible. For

$$a < \frac{v}{\omega\sqrt{1-\beta^2}} = \frac{v}{\omega}\gamma \approx \frac{1}{2\pi}\lambda\gamma\,,$$

the field at the edge of the aperture is noticeably nonzero. In this case diffraction takes place and a scattered field, i.e., diffraction radiation at a frequency ω, arises. If, on the contrary,

$$a > \frac{v}{\omega\sqrt{1-\beta^2}} = \frac{v}{\omega}\gamma \approx \frac{1}{2\pi}\lambda\gamma\,,$$

the field at the edge of the aperture is negligibly small, and hence so is the scattered field.

Since ω_{bound} is proportional to the particle energy, the total diffraction radiation loss is also proportional to the particle energy.

Let us now proceed to the estimation of the diffraction radiation loss. The total energy loss δW is determined by the expression

$$\int W_\omega(\theta)\,\mathrm{d}\Omega\,\mathrm{d}\omega\,,$$

where $W_\omega(\theta)$ is described by formula (60). Consequently,

$$\delta W = \frac{q^2}{\pi^2}\,\frac{v^4}{c^5}\int \frac{1}{(1-(v^2/c^2)\cos^2\theta)^2} \times \left[a\frac{\omega}{c}\sin\theta\, J_1\left(a\frac{\omega}{c}\sin\theta\right) K_0\left(a\frac{\omega}{v}\sqrt{1-\beta^2}\right) - a\frac{\omega}{v}\sqrt{1-\beta^2}\, J_0\left(a\frac{\omega}{c}\sin\theta\right) K_1\left(a\frac{\omega}{v}\sqrt{1-\beta^2}\right)\right]^2 \times \sin^3\theta\cos^2\theta\,\mathrm{d}\theta\,\mathrm{d}\varphi\,\mathrm{d}\omega\,. \tag{70}$$

As was noted above, the factor before the expression in square brackets in the integrand is large in the range of angles $\theta \approx 1/\gamma$, where it is equal to $1/\gamma^4$ on the order of magnitude. Next, on the order of magnitude, we can put $\sin\theta \approx \mathrm{d}\theta \approx 1/\gamma$ and $\cos\theta \approx 1$. Integration over the angle φ comes down to a multiplication by 2π. As concerns the expression in square brackets, it may be assumed to be equal to unity on the order of magnitude for frequencies not exceeding ω_{bound}, and for higher frequencies it falls rapidly and, accordingly, $\mathrm{d}\omega \approx \omega_{\text{bound}}$. In view of this, we obtain

$$\Delta W = \frac{2}{\pi}\,\frac{q^2}{a}\gamma\,. \tag{71}$$

This estimate is rather rough, but we may hope that the order of magnitude is determined correctly.

Thus, the total diffraction radiation energy is inversely proportional to the aperture radius (or, which is the same, to the path length, i.e., the minimum distance between the charge path and the edge of the aperture) and directly proportional to the flying particle energy. We are dealing here with forward radiation in the direction of particle motion in a narrow cone with opening inversely proportional to the particle energy. The spectrum of radiated frequencies is limited from above, the boundary frequency being proportional to the particle energy.

If the frequency of a radiated quantum is determined on the order of magnitude by formula (67), then multiplying this quantity by Planck's constant h, we obtain the value of the energy carried away by this quantum:

$$\varepsilon = h\omega_{\text{bound}} \approx \frac{hv}{a}\gamma\,.$$

Let us ask the question of what number n of such quanta are radiated in the passage of a single charged particle. To answer this question, we should obviously determine the ratio of the total energy loss δW (71) to the emitted quantum energy $h\omega_{\text{bound}}$. We have done this to obtain

$$n \approx \frac{e^2}{hc}\,.$$

The quantity e^2/hc is known as the fine-structure constant and is equal to $1/137$. The estimate shows that a quantum with the energy of about $h\omega_{\text{bound}}$ is emitted approximately once every hundred charge passages through the screen aperture.

5. Radiation of a point source crossing the center of a flat circular screen

Let a thin opaque circular disk of radius a be located in the yz plane of a rectilinear Cartesian coordinate system (Fig. 4). A charged particle is moving uniformly in the positive direction of the x axis at a velocity v, so that the equation of particle motion has the form $x = vt$. At the time moment $t = 0$, the charged particle crosses the screen, enters the volume V (the half-space $x > 0$) and, moves away from the screen. We wish to determine the excited radiation.

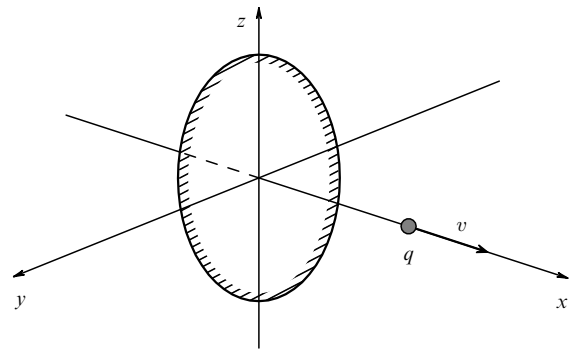

Figure 4. Passage of a point charged particle through the center of a disk.

To find the vector potential of the radiation occurring in this problem, we can exploit the formula for the component A_z of the vector potential:

$$A_z(r\to\infty) = -q\,\frac{\mathrm{i}k}{2\pi^2 c}\,\frac{\exp(\mathrm{i}kr)}{r}\int_{S'} K_0\left(\frac{\omega}{v}\sqrt{1-\beta^2}\rho\right) \times \exp\left[-\mathrm{i}(k_y y + k_z z)\right]\cos\theta\,\mathrm{d}y\,\mathrm{d}z + \frac{q}{\pi c}\,\frac{\exp(\mathrm{i}kr)}{r}\int_V \left[\exp(-\mathrm{i}\mathbf{k}\mathbf{r}') - \exp(-\mathrm{i}\mathbf{k}\hat{\mathbf{r}}')\right] \times \exp\left(\mathrm{i}\frac{\omega}{v}x'\right)\delta(y')\delta(z')\,\mathrm{d}x'\,\mathrm{d}y'\,\mathrm{d}z'\,. \tag{72}$$

Here, S' is the area of the 'aperture,' i.e., in this case the entire area outside the disk in the plane $x = 0$. Formula (72) is equivalent to relation (46) for the scalar potential φ with the only difference that $A_z = v\varphi/c$, and so the right-hand side of formula (72) differs by the factor v/c. Recall that $\rho = \sqrt{y^2+z^2}$ in formula (72) is the distance from the x axis, r is the distance from the observation point to the disk center, and S' is the area of the aperture in the screen over which the integration is performed. In this case, the region S' extends from $\rho = a$ to $\rho = \infty$.

As was shown above, the expression for the vector potential can be reduced to the disk area integral

$$A_z(r\to\infty) = q\,\frac{\mathrm{i}k}{2\pi^2 c}\,\frac{\exp(\mathrm{i}kr)}{r}\int_{S''} K_0\left(\frac{\omega}{v}\sqrt{1-\beta^2}\rho\right) \times \exp\left[-\mathrm{i}(k_y y + k_z z)\right]\cos\theta\,\mathrm{d}y\,\mathrm{d}z\,. \tag{73}$$

Here, S'' is the disk surface, which corresponds to the range of ρ values from 0 to a.

Introducing, as in the preceding section, a polar coordinate system ρ, ϕ on the yz plane and integrating over the polar angle ϕ, we are led to

$$A_z(r \to \infty) = q\,\frac{\mathrm{i}k}{\pi c}\,\frac{\exp(\mathrm{i}kr)}{r}\int_0^a K_0\left(\frac{\omega}{v}\sqrt{1-\beta^2}\rho\right) \times J_0\left(\frac{\omega}{c}\sin\theta\rho\right)\cos\theta\,\rho\,\mathrm{d}\rho\,. \tag{74}$$

Integration over the variable ρ yields

$$A_z(r \to \infty) = \frac{\mathrm{i}q}{\pi\omega}\,\frac{\exp(\mathrm{i}kr)}{r}\,\frac{\beta^2}{1-\beta^2\cos^2\theta} \times \left[a\frac{\omega}{c}\sin\theta\,J_1\left(a\frac{\omega}{c}\sin\theta\right)K_0\left(a\frac{\omega}{v}\sqrt{1-\beta^2}\right) - a\frac{\omega}{v}\sqrt{1-\beta^2}\,J_0\left(a\frac{\omega}{c}\sin\theta\right)K_1\left(a\frac{\omega}{v}\sqrt{1-\beta^2}\right)+1\right]\cos\theta\,. \tag{75}$$

The magnetic field, as in the case of charge passage along the axis of a round aperture, has only one nonzero component H_φ:

$$H_\varphi = -\frac{q}{\pi c}\,\frac{\exp(\mathrm{i}kr)}{r}\,\frac{\beta^2\sin\theta}{1-\beta^2\cos^2\theta}\left[a\frac{\omega}{c}\sin\theta\,J_1\left(a\frac{\omega}{c}\sin\theta\right) \times K_0\left(a\frac{\omega}{v}\sqrt{1-\beta^2}\right) - a\frac{\omega}{v}\sqrt{1-\beta^2}\,J_0\left(a\frac{\omega}{c}\sin\theta\right) \times K_1\left(a\frac{\omega}{v}\sqrt{1-\beta^2}\right)+1\right]\cos\theta\,. \tag{76}$$

The energy radiated at a frequency ω in the frequency range $\mathrm{d}\omega$ into a solid angle $\mathrm{d}\Omega = \sin\theta\,\mathrm{d}\theta\,\mathrm{d}\varphi$ in the direction making an angle θ with the charge velocity is equal to

$$W_\omega(\theta)\,\mathrm{d}\Omega = c|H_\varphi(\theta)|^2 r^2\,\mathrm{d}\Omega = \frac{q^2}{\pi^2}\,\frac{v^4}{c^5}\,\frac{1}{(1-(v^2/c^2)\cos^2\theta)^2} \times \left[a\frac{\omega}{c}\sin\theta\,J_1\left(a\frac{\omega}{c}\sin\theta\right)K_0\left(a\frac{\omega}{v}\sqrt{1-\beta^2}\right) - a\frac{\omega}{v}\sqrt{1-\beta^2}\,J_0\left(a\frac{\omega}{c}\sin\theta\right) \times K_1\left(a\frac{\omega}{v}\sqrt{1-\beta^2}\right)+1\right]^2\sin^3\theta\cos^2\theta\,\mathrm{d}\theta\,\mathrm{d}\varphi\,. \tag{77}$$

If the disk radius a tends to zero, so does the radiation intensity. To establish the law according to which the intensity vanishes, we go back to expression (74) for the vector potential. For small values of the argument, the function K_0 has a logarithmic singularity. Therefore, the result of integration over the radius for small a values can be written as

$$A_z(a \to 0) = q\frac{\mathrm{i}k}{\pi c}\,\frac{\exp(\mathrm{i}kr)}{r}\,\frac{a^2}{2}\ln\left(\frac{v}{\omega a(1-\beta^2)^{1/2}}\right).$$

This implies that at small a the radiation intensity tends to zero as $(a^2\ln[v/a\omega(1-\beta^2)^{1/2}])^2$. That the diffraction radiation intensity tends to zero for a small radius might be expected from physical considerations. Indeed, in this case the optical inhomogeneity vanishes in the limit, and we observe a uniform charge motion in free space. In the inverse limit, when the disk radius tends to infinity, expression (77) gives formula (61) for the intensity of transition radiation that appears when a charge crosses a continuous screen. The quantity to distinguish between large and small radius values, as in the previously considered case of charge passage through a round aperture, is $\lambda\gamma/2\pi$. In this connection, the following is noteworthy. Suppose we are considering radiation at a wavelength $\lambda \ll a$. Then for not very high charge velocities (when $\gamma \approx 1$) we have $a \gg \lambda\gamma/2\pi$. The Lorentz factor increases with increasing particle energy, and, beginning with a certain value of the particle energy, the inverse inequality $a \ll \lambda\gamma/2\pi$ holds for the same values of the aperture radius a and wavelength λ. We have seen that the character of diffraction radiation depends essentially on which of the two inequalities is fulfilled.

In the case of radiation at a disk, the dependence of intensity on the radius turns out to be different from that in the case of radiation generated by the passage of a particle through a round aperture of the same radius. For large values of the radius ($a \gg \lambda\gamma/2\pi$), the radiation at the aperture tends to zero and that on a disk tends to transition radiation. When the radius is small ($a \ll \lambda\gamma/2\pi$), the radiation on the aperture, on the contrary, tends to transition radiation and the radiation at a disk tends to zero.

6. Analogue of the Babinet theorem for diffraction radiation

The amplitudes of radiation fields at a disk and at an aperture of the same radius are in a way related. Let us consider the sum of two expressions, namely, the radiation field (59) for the case of a charge passing through a round aperture of radius a and the radiation field (76) for radiation at a disk of the same radius. It can be readily seen that the sum of fields for these two cases is equal to the transition radiation field. Accordingly, the sum of potentials gives the transition radiation potential. This circumstance has a general character and holds for radiation of a charged particle on any two complementary screens. Two screens (for simplicity we consider flat screens here) are called complementary if the transparent regions of one are opaque regions of the other and vice versa, the opaque regions of one correspond to transparent regions of the other (Fig. 5). Obviously, overlapping the planes of two complementary screens gives one opaque continuous screen. In the classical theory of diffraction, there exists the so-called Babinet theorem: The sum of fields formed upon diffraction by two complementary screens is equal to the field of the wave incident on the screen (or to the field of the source). An analogous theorem can be formulated for the diffraction radiation of moving sources: The sum of the fields of diffraction radiation on two complementary screens is equal to the transition radiation field (on a bulk screen). We will explain this assertion. Let a charged particle move uniformly along the x axis. We place a flat screen with apertures in the plane $x = 0$. The portion of the screen surface consisting of apertures will be designated S'. The nontransparent part of the surface will be designated S'' The charged particle moves uniformly along the x axis and, while crossing the screen plane, gives diffraction radiation. We now write down the expression for the potential which determines the radiation field in this case. The radiation field potential φ_ω is described by formula (46) which we write again for convenience:

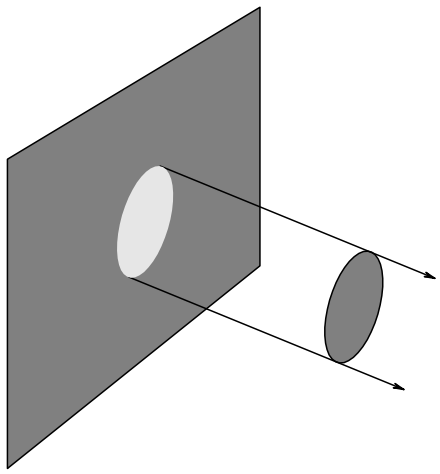

Figure 5. Complementary screens. \

$$\varphi_\omega(r\to\infty) = -q\,\frac{\mathrm{i}k}{2\pi^2 v}\,\frac{\exp(\mathrm{i}kr)}{r}\int_{S'} K_0\left(\frac{\omega}{v}\sqrt{1-\beta^2}\rho\right)$$
$$\times\exp\left[-\mathrm{i}(k_y y + k_z z)\right]\cos\theta\,\mathrm{d}y\,\mathrm{d}z$$
$$+\frac{q}{2\pi v}\,\frac{\exp(\mathrm{i}kr)}{r}\int_V\left[\exp(-\mathrm{i}\mathbf{k}\mathbf{r}') - \exp(-\mathrm{i}\mathbf{k}\hat{\mathbf{r}}')\right]$$
$$\times\exp\left(\mathrm{i}\frac{\omega}{v}x'\right)\delta(y')\delta(z')\,\mathrm{d}x'\,\mathrm{d}y'\,\mathrm{d}z'\,.$$

In the screen plane, we now replace the nontransparent regions by transparent ones and vice versa. We obtain the so-called complementary screen. When a charge flies through the complementary screen, it also generates diffraction radiation with the potential in the form

$$\varphi'_\omega(r\to\infty) = -q\,\frac{\mathrm{i}k}{2\pi^2 v}\,\frac{\exp(\mathrm{i}kr)}{r}\int_{S''} K_0\left(\frac{\omega}{v}\sqrt{1-\beta^2}\rho\right)$$
$$\times\exp\left[-\mathrm{i}(k_y y + k_z z)\right]\cos\theta\,\mathrm{d}y\,\mathrm{d}z$$
$$+\frac{q}{2\pi v}\,\frac{\exp(\mathrm{i}kr)}{r}\int_V\left[\exp(-\mathrm{i}\mathbf{k}\mathbf{r}') - \exp(-\mathrm{i}\mathbf{k}\hat{\mathbf{r}}')\right]$$
$$\times\exp\left(\mathrm{i}\frac{\omega}{v}x'\right)\delta(y')\delta(z')\,\mathrm{d}x'\,\mathrm{d}y'\,\mathrm{d}z'\,. \qquad (78)$$

Here, φ'_ω is the diffraction radiation potential on the complementary screen. In this case, the surface integral is taken over the region S''; this region is transparent in the complementary screen.

Let us sum up the latter two equalities to obtain the sum of radiation potentials from two complementary screens:

$$[\varphi_\omega + \varphi'_\omega](r\to\infty) = -q\,\frac{\mathrm{i}k}{2\pi^2 v}\,\frac{\exp(\mathrm{i}kr)}{r}$$
$$\times\int_{S'+S''} K_0\left(\frac{\omega}{v}\sqrt{1-\beta^2}\rho\right)\exp\left[-\mathrm{i}(k_y y + k_z z)\right]$$
$$\times\cos\theta\,\mathrm{d}y\,\mathrm{d}z + \frac{q}{\pi v}\,\frac{\exp(\mathrm{i}kr)}{r}$$
$$\times\int_V\left[\exp(-\mathrm{i}\mathbf{k}\mathbf{r}') - \exp(-\mathrm{i}\mathbf{k}\hat{\mathbf{r}}')\right]\exp\left(\mathrm{i}\frac{\omega}{v}x'\right)$$
$$\times\delta(y')\delta(z')\,\mathrm{d}x'\,\mathrm{d}y'\,\mathrm{d}z'\,. \qquad (79)$$

The surface integral in formula (79) is taken over the region $S' + S''$, i.e., over the entire screen surface. This surface integral can be calculated as follows. In the above problem of diffraction radiation by a round aperture, the summand of the potential containing the surface integral is calculated explicitly and has the form (51). Integration in this case was performed over the area of the circle of radius a. Obviously, directing the circle radius to infinity, we obtain the integral over the entire screen surface. Doing so, we obtain from formula (51)

$$-q\,\frac{\mathrm{i}k}{2\pi^2 v}\,\frac{\exp(\mathrm{i}kr)}{r}\int_{S'+S''} K_0\left(\frac{\omega}{v}\sqrt{1-\beta^2}\rho\right)$$
$$\times\exp\left[-\mathrm{i}(k_y y + k_z z)\right]\cos\theta\,\mathrm{d}y\,\mathrm{d}z$$
$$= -\frac{\mathrm{i}q}{\pi\omega}\,\frac{v}{c}\,\frac{\exp(\mathrm{i}kr)}{r}\,\frac{1}{1-\beta^2\cos^2\theta}\cos\theta\,.$$

The volume integral (79) can also be calculated in an explicit form. The second summand in formula (79) is a doubled expression (53):

$$\frac{q}{\pi v}\,\frac{\exp(\mathrm{i}kr)}{r}\int_V\left[\exp(-\mathrm{i}\mathbf{k}\mathbf{r}') - \exp(-\mathrm{i}\mathbf{k}\hat{\mathbf{r}}')\right]\exp\left(\mathrm{i}\frac{\omega}{v}x'\right)$$
$$\times\delta(y')\delta(z')\,\mathrm{d}x'\,\mathrm{d}y'\,\mathrm{d}z' = \frac{2\mathrm{i}q}{\pi\omega}\,\frac{v}{c}\,\frac{\exp(\mathrm{i}kr)}{r}$$
$$\times\frac{1}{1-\beta^2\cos^2\theta}\cos\theta\,.$$

Substituting the two latter relations into formula (79), we obtain expression (55) for the potential determining the transition radiation field, and the theorem follows.

If the solution of the problem of diffraction radiation on a screen of a prescribed configuration is known, the above theorem immediately suggests the solution of the problem of radiation on a complementary screen — these two solutions differ only by the transition radiation field.

It is also of importance that the theorem shows a very close relation between transition and diffraction radiation. During the diffraction of a free wave, the field source is on one side of scattering obstacles, whose role is played by complementary screens. The sum of diffraction fields on the other side of the complementary screens is equal to the source field. In the diffraction radiation problem, a moving field source crosses the plane of the screens, and thus the source is on both sides of them, which accounts for the relation between diffraction and transition radiation.

7. Radiation of a charged particle passing out of an open waveguide end

We now consider a semiinfinite circular waveguide with its axis coincident with the x axis of the rectilinear Cartesian coordinate system. The waveguide is situated in the region of negative x values. The waveguide radius will be designated by a. The open waveguide end is located at $x = 0$ and is interfaced with a flat metallic flange positioned in the same plane $x = 0$ as the waveguide opening (Fig. 6). A charged particle moves along the waveguide axis at a constant velocity v in the positive direction of the x axis. On reaching the open end, the particle flies out into free space and, moving at the same velocity, goes to infinity.

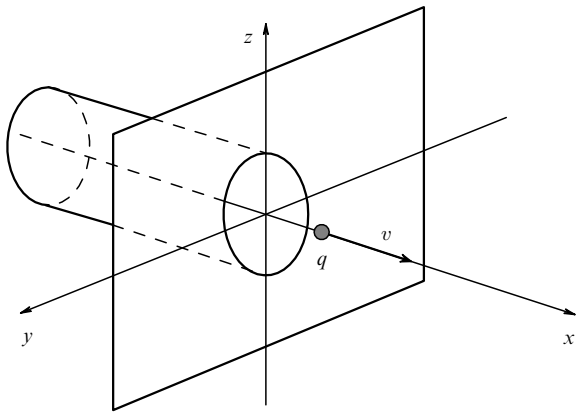

Figure 6. Escape of a point charge from a circular flanged waveguide.

The particle escape from the open waveguide end is accompanied by radiation. The field generated by the particle escape through the open end of a circular flangeless waveguide was earlier determined exactly in an analytical form.[9] In the presence of a flange, this radiation can be estimated in the Huygens – Kirchhoff approximation, as was done in the consideration of the previous problems. This problem is considered below in the approximation of the scalar theory of diffraction.

In the case under consideration, the screen is not flat, but consists of a flange and the waveguide walls. The field of the charged particle moving inside the waveguide is specified by the expression

$$\varphi^{(0)}(\mathbf{r}, t) = \int \varphi_\omega^{(0)} \exp(-\mathrm{i}\omega t)\, \mathrm{d}\omega\,,$$

where

$$\varphi_\omega^{(0)} = \frac{q}{\pi v} \exp\left(\frac{\omega}{v} x\right) \left[K_0\left(\frac{\omega}{v}\sqrt{1-\beta^2}\rho\right) - \frac{K_0\left((\omega/v)\sqrt{1-\beta^2}a\right)}{I_0\left((\omega/v)\sqrt{1-\beta^2}a\right)} I_0\left(\frac{\omega}{v}\sqrt{1-\beta^2}\rho\right)\right]. \tag{80}$$

Here, $I_0(x) = J_0(\mathrm{i}x)$ is a modified Bessel function (the Bessel function of an imaginary argument). With increasing argument, this function grows exponentially:

$$I_0(x) \approx \frac{1}{\sqrt{2\pi x}} \exp x \qquad (x \gg 1)\,.$$

Expression (80) takes into account field vanishing on the waveguide walls. In the Huygens – Kirchhoff approximation, we may assume that in the plane $x = 0$ the field is nonzero only at the waveguide opening (i.e., when $\rho < a$) and is defined by formula (80). Next, by analogy with what we did when considering the previous problems, we can define the radiation field at large distances from the waveguide opening (i.e., from the origin). The radiation field potential can be written as

$$\begin{aligned}\varphi_\omega(r \to \infty) = {} & -q\,\frac{\mathrm{i}k}{2\pi^2 v}\,\frac{\exp(\mathrm{i}kr)}{r} \int_{S'} \left[K_0\left(\frac{\omega}{v}\sqrt{1-\beta^2}\rho\right)\right. \\ & \left. - \frac{K_0\left((\omega/v)\sqrt{1-\beta^2}a\right)}{I_0\left((\omega/v)\sqrt{1-\beta^2}a\right)} I_0\left(\frac{\omega}{v}\sqrt{1-\beta^2}\rho\right)\right] \\ & \times \exp\left[-\mathrm{i}(k_y y + k_z z)\right] \cos\theta\, \mathrm{d}y\, \mathrm{d}z \\ & + \frac{q}{2\pi v}\,\frac{\exp(\mathrm{i}kr)}{r} \int_V \left(\exp(-\mathrm{i}\mathbf{k}\mathbf{r}') - \exp(-\mathrm{i}\mathbf{k}\hat{\mathbf{r}}')\right) \\ & \times \exp\left(\mathrm{i}\frac{\omega}{v}x'\right) \delta(y')\delta(z')\, \mathrm{d}x'\, \mathrm{d}y'\, \mathrm{d}z'\,,\end{aligned} \tag{81}$$

where S' is the waveguide opening area defined by the inequality

$$\rho = \sqrt{y^2 + z^2} < a\,.$$

On the plane $x = 0$, we introduce a polar coordinate system (ρ, ϕ) and integrate over the polar angle ϕ to obtain

$$\begin{aligned}\varphi_\omega(r \to \infty) = {} & -q\,\frac{\mathrm{i}k}{\pi v}\,\frac{\exp(\mathrm{i}kr)}{r} \int_0^a \left[K_0\left(\frac{\omega}{v}\sqrt{1-\beta^2}\rho\right)\right. \\ & \left. - \frac{K_0\left((\omega/v)\sqrt{1-\beta^2}a\right)}{I_0\left((\omega/v)\sqrt{1-\beta^2}a\right)} I_0\left(\frac{\omega}{v}\sqrt{1-\beta^2}\rho\right)\right] \\ & \times J_0\left(\frac{\omega}{c}\rho\sin\theta\right)\cos\theta\,\rho\,\mathrm{d}\rho + \frac{q}{2\pi v}\,\frac{\exp(\mathrm{i}kr)}{r} \\ & \times \int_V \left[\exp(-\mathrm{i}\mathbf{k}\mathbf{r}') - \exp(-\mathrm{i}\mathbf{k}\hat{\mathbf{r}}')\right] \exp\left(\mathrm{i}\frac{\omega}{v}x'\right) \\ & \times \delta(y')\delta(z')\, \mathrm{d}x'\, \mathrm{d}y'\, \mathrm{d}z'\,.\end{aligned} \tag{82}$$

The integration yields

$$\begin{aligned}\varphi_\omega = {} & -\frac{\mathrm{i}q}{\pi\omega}\,\frac{v}{c}\,\frac{\exp(\mathrm{i}kr)}{r}\,\frac{\cos\theta}{1-(v^2/c^2)\cos^2\theta} \times \\ & \times \left[1 - \frac{J_0\left((\omega/c)\,a\sin\theta\right)}{I_0\left((\omega/v)\sqrt{1-\beta^2}a\right)}\right] + \frac{\mathrm{i}q}{\pi\omega}\,\frac{v}{c}\,\frac{\exp(\mathrm{i}kr)}{r} \times \\ & \times \frac{\cos\theta}{1-(v^2/c^2)\cos^2\theta}\,.\end{aligned} \tag{83}$$

The first summand describes the diffraction of the waveguide field upon the passage of the particle through the opening into a free space. The second summand, similarly to the cases described above, gives the transition radiation. This time, it is due to the charge escape from the waveguide. Reduction of terms in formula (83) leads us to the expression

$$\begin{aligned}\varphi_\omega = {} & \frac{\mathrm{i}q}{\pi\omega}\,\frac{v}{c}\,\frac{\exp(\mathrm{i}kr)}{r}\,\frac{\cos\theta}{1-(v^2/c^2)\cos^2\theta} \\ & \times \frac{J_0\left((\omega/c)\,a\sin\theta\right)}{I_0\left((\omega/v)\sqrt{1-\beta^2}a\right)}\,.\end{aligned} \tag{84}$$

We now determine the spectral and angular distribution of radiation implied by relation (84). The expression for the scalar potential φ corresponds to the vector potential $A_z = \beta\,\varphi$. Knowing the expression for φ, we find the

[9] See, for example, Bolotovskiĭ B M, Voskresenskiĭ G V *Dokl. Akad. Nauk SSSR* **156** (5) 1072 (1964).

magnetic field

$$H_\varphi = \frac{q}{\pi c}\frac{v^2}{c^2}\frac{\exp(\mathrm{i}kr)}{r}\frac{\cos\theta\sin\theta}{1-(v^2/c^2)\cos^2\theta}\frac{J_0\big((\omega/c)\,a\sin\theta\big)}{I_0\Big((\omega/v)\sqrt{1-\beta^2}a\Big)}\,. \tag{85}$$

Knowing H_φ, one can readily derive the expression for $W_\omega(\theta)$, which is the radiation intensity at a frequency ω at an angle θ to the direction of charge motion:

$$W_\omega(\theta) = \frac{q^2}{\pi c}\frac{v^4}{c^4}\frac{\cos^2\theta\sin^3\theta}{(1-(v^2/c^2)\cos^2\theta)^2}\frac{J_0^2\big((\omega/c)\,a\sin\theta\big)}{I_0^2\Big((\omega/v)\sqrt{1-\beta^2}a\Big)}\,. \tag{86}$$

With low values of a ($a \to 0$), formula (86) yields the intensity of transition radiation. With high a values, the radiation intensity exponentially tends to zero:

$$W_\omega(\theta) \approx \exp\left[-\frac{2\omega}{v}\sqrt{1-\beta^2}a\right] \qquad \left(\frac{\omega}{v}\sqrt{1-\beta^2}a \gg 1\right).$$

Such asymptotic behavior is indicative of the fact that the spectrum of diffraction radiation of a relativistic particle is characterized by the limiting frequency ω_{bound} that is proportional to the gamma factor, i.e., to the particle energy. The expression for ω_{bound} has the same form (67) as in the case of diffraction radiation at a round aperture of the same radius. The spectrum width in our problem and, accordingly, the total radiation loss are proportional to the particle energy.

There exists an exact solution of the problem of the radiation of a charged particle passing into an open space from a semiinfinite circular flangeless waveguide (see footnote 9 in p. 772). The analytical solution obtained in the relativistic case gives the radiation intensity close to that described by formula (86). On the other hand, in the relativistic case and for small radiation angles, the presence or absence of a flange is unimportant. This suggests that in the problem considered here the scalar theory of diffraction radiation is a good approximation.

8. Conclusion

A few particularly simple diffraction radiation problems have been considered in the scalar approximation of the theory of diffraction. In actuality, as has already been said, the electromagnetic field is of vector nature, and the question arises of whether it would be better to use the so-called vector theory of diffraction. This theory represents a scattered field in the form of vectors satisfying the Maxwell equations. Such a result allows the polarization of scattered radiation to be determined directly, whereas the scalar theory does not give this possibility in the general case. However, for axisymmetric problems that were considered above, the vector and the scalar theories lead to identical results, the scalar theory being advantageous for providing a simpler way of obtaining results. Note that the radiation fields in the above problems were determined at large distances from the region in which the radiation process proceeded, i.e., at distances exceeding the path of formation. In the classical theory of diffraction, observation of fields at large distances from the screen is typical of Fraunhofer diffraction. It would be very important to consider the total field (i.e., the diffraction radiation field together with the self-field of the radiating particle) at comparatively small distances from the screen, i.e., at distances comparable with or smaller than the path of formation. In the classical theory of diffraction, such a statement of the problem is typical of Fresnel diffraction.

Rigorous analytical solutions were obtained for a number of problems of the theory of diffraction radiation. An analysis of these solutions is important both for the understanding of the nature of the phenomenon and for the evaluation of various approximate methods. Note that the overwhelming majority of exact solutions were published by Soviet and Russian researchers. To make our presentation more complete, we present at the end of the paper a list of all the works on diffraction radiation known to us. In this paper, we, however, have considered neither the mathematical methods that allow obtaining exact solutions nor the solutions themselves, but have restricted our analysis to much simpler approximate methods, which in a number of cases give satisfactory results.

The authors are grateful to Prof. V I Kogan, Prof. M Ikezava, and Prof. Yu Shibat for useful comments they made in the discussion of the manuscript.

This work was supported in part by the Russian Foundation for Basic Research (project Nos 98-02-17994 and 99-02-18183)

References[10]

1. Askar'yan G A "Ob Izluchenii Uskorenno Dvizhushchegosya Élektricheskogo Izobrazheniya Ravnomerno Dvizhushchegosya Zaryada" (On the Radiation of an Accelerated Électric Image of a Uniformly Moving Charge) *Zh. Exp. Teor. Fiz.* **29** (3) 388 (1955) [*Sov. Phys. JETP* **2** 334 (1956)]
2. Bobrinev V, Braginskiĭ V "Izluchenie Tochechnogo Zaryada Ravnomerno Dvizhushchegosya po Osi Kruglogo Otverstiya v Beskonechnoĭ Ideal'no Provodyashcheĭ Ploskosti" (Radiation of a Point Charge Uniformly Moving along the Axis of a Round Aperture in an Infinite Perfectly Conducting Plane) *Dokl. Akad. Nauk SSSR* **123** (4) 634 (1958)
3. Dnestrovskiĭ Yu N, Kostomarov D P "Izluchenie Modulirovannogo Puchka Zaryazhennykh Chastits pri Prolete cherez Krugloe Otverstie v Ploskom Ékrane" (Radiation of a Modulated Beam Passing through a Round Aperture in a Flat Screen) *Dokl. Akad. Nauk SSSR* **124** (4) 792, 799 (1959)
4. Kazantsev A P, Surdutovich G I "Izluchenie Zaryazhennoĭ Chastitsy Proletayushcheĭ vblizi Metallicheskogo Ékrana" (Radiation of a Charged Particle Passing near a Metallic Screen) *Dokl. Akad. Nauk SSSR* **147** (1) 74 (1962)
5. Sedrakyan D M "Difraktsionnoe Izluchenie Lineĭnogo Istochnika Proletayushchego vblizi Kraya Ideal'no Provodyashcheĭ Poluploskosti" (Diffraction Radiation of a Linear Source Passing near the Edge of an Perfectly Conducting Half-Plane) *Izv. Akad. Nauk Arm. SSR* **16** 115 (1963)
6. Bolotovskiĭ B M, Voskresenskiĭ G V "Pole Zaryazhennoĭ Niti, Ravnomerno Proletayushcheĭ Mimo Provodyashcheĭ Poluploskosti" (The Field of a Charged Filament Uniformly Passing near a Conducting Half-Plane) *Zh. Tekh. Fiz.* **34** (1) 11 (1964)
7. Sedrakyan D M "Izluchenie Lineĭnogo Istochnika Peresekayushchego pri Svoem Dvizhenii Ploskiĭ Polubeskonechnyĭ Ékran" (Radiation of a Moving Linear Source Crossing a Flat Semiinfinite Screen) *Zh. Tekh. Fiz.* **34** 718 (1964)
8. Bolotovskiĭ B M, Voskresenskiĭ G V "Izluchenie Lineĭnogo Istochnika pri Prolete cherez Otkrytyĭ Konets Ploskogo Volnovoda" (Radiation of a Linear Source Passing through the Open End of a Planar Waveguide) *Dokl. Akad. Nauk SSSR* **156** 74 (1964)

[10] Bibliography of diffraction radiation.

9. Aivazyan Yu M "Vozbuzhdenie Ploskogo Polubeskonechnogo Volnovoda Lineĭnym Istochnikom Proletayushchim mimo Otkrytogo Kontsa" (Excitation of a Planar Semi-Infinite Waveguide by a Linear Source Passing near the Open End) *Izv. Akad. Nauk ArmSSR* **17** 81 (1964)
10. Bolotovskiĭ B M, Voskresenskiĭ G V "Pole Zaryazhennoĭ Niti Ravnomerno Dvizhushcheĭsya Vblizi ot Sistemy Ideal'no Provodyashchikh Poluploskosteĭ" (The Field of a Charged Filament Uniformly Moving near a System of Perfectly Conducting Half-Planes) *Dokl. Akad. Nauk SSSR* **156** 770 (1964)
11. Bolotovskiĭ B M, Voskresenskiĭ G V "Izluchenie Tochechnoĭ Zaryazhennoĭ Chastitsy Proletayushcheĭ po Osi Polubeskonechnogo Kruglogo Volnovoda" (Radiation of a Point Charged Particle Passing along the Axis of a Semi-Infinite Circular Waveguide) *Dokl. Akad. Nauk SSSR* **156** (5) 1072 (1964)
12. Bolotovskiĭ B M, Voskresenskiĭ G V "Izluchenie Tochechnoĭ Zaryazhennoĭ Chastitsy Proletayushcheĭ po Osi Polubeskonechnogo Kruglogo Volnovoda" (Radiation of a Point Charged Particle Passing along the Axis of a Semi-Infinite Circular Waveguide) *Zh. Tekh. Fiz.* **34** (4) 711 (1964)
13. Bolotovskiĭ B M, Voskresenskiĭ G V "Izluchenie Niti s Tokom i Zaryazhennoĭ Niti Proletayushchikh Vblizi Otkrytogo Kontsa Ploskogo Volnovoda" (Radiation of a Filament with Current and a Charged Filament Passing through the Open End of a Planar Waveguide) *Zh. Tekh. Fiz.* **34** (4) 704 (1964)
14. Kolpakov O A, Kotov V I "Izluchenie Zaryada Proletayushchego Cherez Tsilindricheskiĭ Resonator (Radiation of a Charge Passing through a Cylindrical Resonator) *Zh. Tekh. Fiz.* **34** (8) 1387 (1964)
15. Bolotovskiĭ B M, Voskresenskiĭ G V "Izluchenie Lineĭnogo Istochnika Proletayushchego Vblizi Difraktsionnoĭ Reshetki Obrazovannoĭ Sistemoĭ Ideal'no Provodyashchikh Ploskosteĭ" (Radiation of a Linear Source Passing near a Diffraction Grating Formed by a System of Perfectly Conducting Half-Planes) *Zh. Tekh. Fiz.* **34** (10) 1856 (1964)
16. Bolotovskiĭ B M, Sedrakyan D M "Izluchenie Chastitsy ot Otkrytogo Kontsa Volnovoda" (Radiation of a Particle by an Open Waveguide End) *Izv. Akad. Nauk Arm. SSR* **17** (2) 119 (1964)
17. Bolotovskiĭ B M, Sedrakyan D M "Izluchenie Zaryazhennoĭ Chastitsy Proletayushcheĭ Cherez Otkrytyĭ Konets Kruglogo Volnovoda Parallel'no Ego Osi" (Radiation of a Charged Particle Passing through an Open End of a Circular Waveguide Parallel to its Axis) *Radiotekhn. Elektron.* **9** (12) 2187 (1964)
18. Sedrakyan D M "Difraktsionnoe Izluchenie Lineĭnykh i Tochechnykh Istochnikov" (Diffraction Radiation of Linear and Point Sources) Thesis for Candidate of Physico-Mathematical Sciences (Moscow: Lebedev Physical Institute, 1964)
19. Aĭvazyan Yu M, Sedrakyan D M "Vozbuzhdenie Ploskogo Polubeskonechnogo Volnovoda Lineĭnym Istochnikom Proletayushchim mimo Otkrytogo Kontsa" (Excitation of a Planar Semi-Infinite Waveguide by a Linear Source Passing by the Open End) *Izv. Akad. Nauk Arm. SSR* **18** (1) 117 (1965)
20. Aivazyan Yu M "Difraktsionnoe Izluchenie Istochnikov Dvizhushchikhsya s Postoyannymi i Peremennymi Skorostyami" (Diffraction Radiation of Sources Moving at Constant and Variable Velocities) Thesis for Candidate of Physico-Mathematical Sciences (Moscow: Lebedev Physical Institute, 1965)
21. Sedrakyan D M "Difraktsiya Izlucheniya Vavilova – Cherenkova na Poluploskosti" (Diffraction of Vavilov – Cherenkov Radiation on a Half-Plane) *Opt. Spektrosk.* **18** 360 (1965)
22. Bolotovskiĭ B M "Izluchenie Ravnomerno Dvizhushchikhsya Istochnikov" (Radiation of Uniformly Moving Sources) Thesis for Candidate of Physico-Mathematical Sciences (Moscow: Lebedev Physical Institute, 1965)
23. Bolotovskiĭ B M, Voskresenskiĭ G V "Difraktsionnoe Izluchenie" (Diffraction Radiation) *Usp. Fiz. Nauk* **88** (2) 209 (1966) [*Sov. Phys. Usp.* **9** 73 (1966)]
24. Avdeev E V, Voskresenskiĭ G V "K Raschetu Difraktsionnogo Izlucheniya Lineĭnogo Istochnika Dvizhushchegosya Vblizi Periodicheskoĭ Zamedlyayushcheĭ Struktury" (To the Calculation of Diffraction Radiation of a Linear Source Moving near a Periodic Slow-Wave Structure) *Radiotekhn. Elektron.* **11** (8) 1419 (1966)
25. Avdeev E V, Voskresenskiĭ G V "Izluchenie Tochechnogo Zaryada Ravnomerno Dvizhushchegosya Vblizi Periodicheskoĭ Sistemy Ideal'no Provodyashchikh Ploskosteĭ" (Radiation of a Point Charge Uniformly Moving near a Periodic System of Perfectly Conducting Planes) *Radiotekhn. Elektron.* **11** (9) 1560 (1966)
26. Avdeev E V, Voskresenskiĭ G V "Izluchenie Zaryazhennoĭ Niti Dvizhushcheĭsya Ravnomerno Vblizi Grebenchatoĭ Struktury; Obshchee Reshenie" (Radiation of a Charged Filament Uniformly Moving near a Comb Structure; General Solution) *Radiotekhn. Elektron.* **12** (3) 469 (1967)
27. Avdeev E V, Voskresenskiĭ G V "O Kharakteristikakh Izlucheniya Istochnika, Dvizhushchegosya Vblizi Grebenchatoĭ Struktury" (On the Characteristics of Radiation of a Source Moving near a Comb Structure) *Izv. Vyssh. Uchebn. Zaved. Radiofiz.* **11** (1) (1968)
28. Bolotovskiĭ B M, Voskresenskiĭ G V "Izluchenie Zaryazhennykh Chastits v Periodicheskikh Strukturakh" (Radiation of Charged Particles in Periodic Structures) *Usp. Fiz. Nauk* **94** (3) 377 (1968) [*Sov. Phys. Usp.* **11** 143 (1968)]
29. Morton P, Neil T, in *Proc. Symposium on Electron Ring Accelerators* UCRL-18103 365 (Berkeley, 1968)
30. Lowson T D "Radiation from a ring charge passing through a resonator" RHEL/M 144 (1968)
31. Avdeev E V, Voskresenskiĭ G V "Élektromagnitnoe Vozbuzhdenie Periodicheskoĭ Reshetchatoĭ Struktury iz Provodyashchikh Lent" (Electromagnetic Excitation of a Periodic Lattice Structure of Conducting Tapes) *Radiotekhn. Elektron.* **14** (5) 839 (1969)
32. Avdeev E V "Élektromagnitnoe Vozbuzhdenie Periodicheskikh Zamedlyayushchikh Struktur" (Electromagnetic Excitation of Periodic Slow-Wave Structures) Thesis for Candidate of Physico-Mathematical Sciences (Moscow: Moscow Physico-Technical Institute, 1968)
33. Levine B S, Sessler A M "Excitation of a Closed Cylindrical Cavity by a Charge Ring Moving along the Axis at Constant Velocity" *Trans. IEEE Nucl. Sci.* **NS-16** (3) 1031 (1969)
34. Rubin S B, Kuznetsov A B, Preprint Inst. Nucl. Res. R9-4728 (Dubna: Inst. Nucl. Res., 1969)
35. Ter-Mikaelyan M L *Vliyanie Sredy na* Élektromagnitnye Protsessy pri Vysokikh Énergiyakh (The Influence of the Medium on High-Energy Électromagnetic Processes) (Erevan: Izd. Akad. Nauk Arm. SSR, 1969) [Translated into English: *High-Energy Electromagnetic Processes in Condensed Media* (New York: Wiley-Interscience, 1972)]
36. Ter-Mikaelyan M L, Khachatryan B V "Difraktsionnoe Izluchenie Bystrykh Chastits" (Diffraction Radiation of Fast Particles) *Dokl. Akad. Nauk Arm. SSR* **40** 13 (1965)
37. Khachatryan BV "Matematicheskoe Obosnovanie Formul Difraktsionnogo Izlucheniya" (The Mathematical Basis of the Diffraction Radiation Formulas) *Izv. Akad. Nauk Arm. SSR, Ser. Fiz.-Mat. Nauk* **18** (2) 133 (1965)
38. Hazeltine R D, Rosenbluth M N, Sessler A M, Preprint UCRL-19793 LRL (Berkeley, 1970)
39. Voskresenskiĭ G V, Kurdyumov V N "Izluchenie Élektronnogo Kol'tsa pri Prolete Vozle Styka Dvukh Kruglykh Volnovodov" (Radiation of an Electron Ring upon Passage near the Junction of Two Circular Waveguides) *Tr. Rad. Tekhn. Inst. Akad. Nauk SSSR* **2** 60 (1970)
40. Kuznetsov A B, Rubin S B "K Voprosu o Tormozhenii Relyativistskogo Zaryada pri Prolete mimo Ideal'no Provodyashchego Prepyatstviya" (To the Question of Deceleration of a Relativistic Charge Passing by a Perfectly Conducting Obstacle) Preprint Inst. Nucl. Res. P9-5247 (Dubna: Inst. Nucl. Res., 1970)
41. Rubin S B, Kuznetsov A B "K Voprosu o Tormozhenii Relyativistskogo Zaryada pri Prolete mimo Ideal'no Provodyashchego Prepyatstviya" (To the Question of Deceleration of a Relativistic Charge Passing by a Perfectly Conducting Obstacle) *Zh. Tekh. Fiz.* **41** (9) 1851 (1971)
42. Voskresenskiĭ G V, Kurdyumov V N "Radiatsionnoe Tormozhenie Zaryada v Tsilindricheskom Rezonatore s Podvodyashchimi Volnovodami" (Radiative Deceleration of a Charge in a Cylindrical Resonator with ? Waveguides) *Tr. Rad. Tekhn. Inst. Akad. Nauk SSSR* **7** 3 (1971)
43. Voskresenskiĭ G V, Kurdyumov V N "Zavisimost' Intensivnosti Radiatsionnykh Poter' v Rezonatore ot Formy Élektronnogo Sgustka" (Dependence of the Intensity of Radiation Loss in a

Resonator on the Form of the Electron Bunch) *Tr. Rad. Tekhn. Inst. Akad. Nauk SSSR* **7** 27 (1971)
44. Berezhnoĭ V A, Plis A I "Ob Élektromagnitnom Vozbuzhdenii Periodicheskoĭ Struktury s Kanalom" (On Electromagnetic Excitation of a Periodic Structure with a Channel) *Tr. Rad. Tekhn. Inst. Akad. Nauk SSSR* **7** 41 (1971)
45. Shegurova G I "Izluchenie Zvukovykh Voln Protyazhennymi, Khorosho Obtekaemymi Telami, Dvizhushchimisya mimo Poluploskosti" (Radiation of Acoustic Waves by Extended Well-Flowing Bodies Moving past a Half-Plane) *Akust. Zh.* **17** (2) (1971)
46. Shegurova G I "Difraktsionnoe Akusticheskoe Izluchenie Tochechnykh i Protyazhennykh Istochnikov" (Diffraction Acoustic Radiation by Point and Extended Sources) Thesis for Candidate of Physico-Mathematical Sciences (Moscow: Moscow State Pedagogical Institute, 1971)
47. Korolev A A, Frolov-Bagreev A A "Priblizhennoe Opredelenie Difraktsionnykh Poter' pri Prolete Zaryazhennoĭ Chastitsy mimo Malogo Otverstiya" (An Approximate Determination of the Diffraction Loss upon a Passage of a Charged Particle near a Small Aperture) *Tr. Rad. Tekhn. Inst. Akad. Nauk SSSR* **7** 55 (1971)
48. Berezhnoĭ V A, Plis A I "Ob Élektromagnitnom Vozbuzhdenii Odnoĭ Periodicheskoĭ Struktury" (On Electromagnetic Excitation of One Periodic Structure) *Kratk. Soobshchen. Fiz.* (5) 81 (1970)
49. Berezhnoĭ V A, Voskresenskiĭ G V, Plis A I "Ob Élektromagnitnom Vozbuzhdenii Periodicheskoĭ Struktury s Kanalom" (On Electromagnetic Excitation of a Periodic Structure with a Channel) *Izv. Vyssh. Uchebn. Zaved., Radiofiz.* **16** (3) 449 (1973)
50. Lomize L G, Rubtsov B A, Shmidt A V "Raschet Datchikov Garmoniki Toka Puchka" (Calculation of Beam Current Harmonic Detectors) *Tr. Rad. Tekhn. Inst. Akad. Nauk SSSR* **10** 260 (1973)
51. Plis A I "Vozbuzhdenie Otkrytykh i Zamknutykh Struktur Dvizhushchimisya Zaryadami i Tokami" (Excitation of Open and Closed Structures by Moving Charges and Currents) Thesis for Candidate of Physico-Mathematical Sciences (Moscow: Fiz. Inst. Akad. Nauk SSSR, 1972)
52. Berezhnoĭ V A "Tochnyĭ Raschet Izlucheniya Dvizhushchikhsya Istochnikov v Zamknutykh Periodicheskikh Strukturakh" (An exact Calculation of Radiation from Moving Sources in Closed Periodic Structures) Thesis for Candidate of Physico-Mathematical Science (Moscow: Mos. Fiz. Tekhn. Inst., 1973)
53. Voskresenskiĭ G V, Kurdyumov V N "O Kharakteristikakh Vzaimodeĭstviya Dvizhushchegosya Kol'tsevogo Toka s Neodnorodnoĭ Volnovodnoĭ Structuroĭ" (On the Characteristics of the Interaction Between a Moving Ring Current and an Heterogeneous Waveguide Structure) *Izv. Vyssh. Uchebn. Zaved., Radiofiz.* **19** (1) 141 (1976)
54. Shestopalov V P *Difraktsionnaya* Élektronika (Diffraction Electronics) (Kiev: Naukova Dumka, 1976)
55. Voskresenskiĭ G V, Galst'yan E A "Izluchenie Tochechnogo Zaryada pri Prolete Vozle Razvetvleniya Kruglogo Volnovoda" (Radiation from a Point Charge upon Its Passage by a Circular Waveguide Bifurcation) *Tr. Rad. Tekhn. Inst. Akad. Nauk SSSR* **30** 70 (1977)
56. Voskresenskiĭ G V, Galst'yan E A "Izluchenie Zaryazhennoĭ Niti pri Prolete mimo Ploskogo Volnovoda s Flantsami" (Radiation from a Charged Beam Moving near a Semiinfinite Plane Flanged Waveguide) *Zh. Tekh. Fiz.* **48** (2) 210 (1978) [*Sov. Phys. Tech. Phys.* **23** 128 (1978)]
57. Galst'yan E A "Kharakteristiki Izlucheniya Zaryazhennogo Sgustka, Proletayushchego Vblizi Razvetvleniya Kruglogo Volnovoda" (Characteristics of Radiation of a Charged Bunch Passing near the Bifurcation of a Circular Waveguide) *Tr. Rad. Tekhn. Inst. Akad. Nauk SSSR* **31** 56 (1978)
58. Galst'yan E A, Voskresenskiĭ G V, Kurdyumov V N "Vzaimodeĭstvie Zaryazhennogo Istochnika s Diafragmoi v Volnovode" (The Interaction of a Charged Source with a Waveguide Diaphragm) Preprint Rad. Tekhn. Inst. Akad. Nauk SSSR 784 (Moscow: Rad. Tekhn. Inst. Akad. Nauk SSSR, 1978)
59. Galst'yan E A "Vzaimodeĭstvie Dvizhushchikhsya Istochnikov Élektromagnitnogo Polya s Neregulyarnostyami Volnovodov" (The Interaction of Moving Electromagnetic Field Sources with Waveguide Irregularities) Thesis for Candidate of Physico-Mathematical Science (Moscow: Phys. Tekhn. Inst., 1978)
60. Voskresenskiĭ G V, Galst'yan E A "Vzaimodeĭstvie Ravnomerno Dvizhushcheĭsya Zaryazhennoĭ Niti s Diafragmoĭ v Ploskom Volnovode" (Interaction of a Uniformly Moving Charged Filament with an Iris in a Plane Waveguide) *Zh. Tekh. Fiz.* **49** (4) 696 (1979) [*Sov. Phys. Tech. Phys.* **24** 404 (1979)]
61. Begzhanov R B, Bolotovskiĭ B M, Isaev R S "Ob Izluchenii Ravnomerno i Pryamolineĭno Dvizhushchegosya Istochnika pri Peresechenii Ploskogo Neprozrachnogo Ékrana Imeyushchego Otverstiya Proizvol'noĭ Formy" (On the Radiation of a Uniformly and Rectilinearly Moving Source Crossing a Flat Nontransparent Screen with Arbitrarily Shaped Apertures) Preprint Inst. Nucl. Phys. Akad. Nauk Uzb. SSR R-1-386 (Tashkent: Inst. Nucl. Phys. Akad. Nauk Uzb. SSR, 1988)
62. Shibata Y, Hasebe S, Ishi K et al. "Observation of Coherent Diffraction Radiation from Bunched Electrons Passing through a Circular Aperture in the Millimeter- and Submillimeter-Wavelength Regions" *Phys. Rev. E* **52** 6787 (1995)
63. Rule D W, Fiorito R B, Kimura W D "Noninterceptive Beam Diagnostics Based on Diffraction Radiation" *AIP Conf. Proc.* **390** 510 (1997)
64. Castellano M *Nucl. Instrum. Methods A* **394** 275 (1997)
65. Fiorito R B, Rule D W, Kimura W D "Noninvasive Beam Position, Size, Divergence and Energy Diagnostics Using Diffraction Radiation", in *Proc. of the Advanced Accelerator Concept Workshop* (Baltimore, Maryland: July 5–11, 1998) (AIP Conf. Proc., Vol. 472, Ed. W Lawson) (Woodbury, N.Y.: AIP, 1999)
66. Shestopalov V P *Smith–Purcell Effect* (Commack, N.Y.: Nova Science Publishers, Inc., 1998)
67. Potylitsyn A P "Smith–Purcell Effect as Resonant Diffraction Radiation" *Nucl. Instrum. Methods Phys. Res. B* **145** (1, 2) 60 (1998)
68. Mkrtchyan A R et al. "Coherent Diffraction Radiation from an Electron Bunch" *Nucl. Instrum. Methods Phys. Res. B* **145** (1, 2) 67 (1998)
69. Potylitsyn A P "Transition Radiation and Diffraction Radiation. Similarities and Differences" *Nucl. Instrum. Methods Phys. Res. B* **145** (1, 2) 169 (1998)
70. Fiorito R B, Rule D W "Diffraction Radiation Diagnostics for Moderate to High Energy Beams", in *Proc. of the IV Int. Symp. on Radiation from Relativistic Electrons in Periodical Structures*, September 13–16, 1999, Lake Baikal, Russian Federation
71. Potylitsyn A P "Polarization Characteristics of Diffraction Radiation", in *Proc. of the IV Int. Symp. on Radiation from Relativistic Electrons in Periodical Structures*, September 13–16, 1999, Lake Baikal, Russian Federation
72. Shibata Y et al. "Measurement of the Longitudinal Distribution of Electrons in Bunches by Observation of Coherent Radiation in the Far-Infrared Region", in *Proc. of the IV Int. Symp. on Radiation from Relativistic Electrons in Periodical Structures*, September 13–16, 1999, Lake Baikal, Russian Federation
73. Galst'yan E A "Izluchenie Zaryazhennoi Niti pri Kosom Prolete mimo Provodyashchei Poluploskosti" (Radiation from a Charged Filament upon a Slanting Passage by a Conducting Half-Plane) *Dokl. Ross. Akad. Nauk* **366** (5) 616 (1999) [*Dokl. Phys.* **44** 341 (1999)]
74. Bolotovskiĭ B M "Difraktsiya i Difraktsionnoe Izluchenie" (Diffraction and Diffraction Radiation), in *Fundamental'naya Optika i Spektroskopiya* (Fundamental Optics) Issue 2 (Moscow: FIAN, 1999) p. 39