Physics – Uspekhi **43** (4) 315 – 347 (2000)

REVIEWS OF TOPICAL PROBLEMS PACS numbers: **13.75.–n**, **13.90.+i**, **14.40.–n**, 14.40.Aq

New data on the pion – pion interaction at low energies

V V Vereshchagin, K N Mukhin, O O Patarakin

DOI: 10.1070/PU2000v043n04ABEH000612

Contents

Abstract. Current theoretical and experimental approaches to the pion – pion interaction are discussed and the results obtained are presented. Experiments on $\pi N \to \pi\pi N$ reactions as a source of information on $\pi\pi$ scattering are described as well as polarized target experiments and those on K_{e4} decay and pionium. The concepts of effective field theory and the basic ideas of chiral perturbation theory are discussed. The problem of light scalar resonances is analyzed and the incorrectness of data analysis procedures is considered.

1. Introduction

In 1935, H Yukawa presupposed mesons, i.e. new particles that had not even been observed at the time and possessed an intermediate mass somewhere between the proton and electron masses, to be the quanta of strong interactions. In 1947 such strongly interacting particles were revealed to be present in cosmic rays, they were termed π mesons, or pions. Somewhat later π mesons started to be produced at accelerators, and, during the past two decades, at high-current accelerators — meson factories, also.

V V Vereshchagin St.-Petersburg State University, Petrodvorets, 198904 St.-Petersburg, Russian Federation
Tel. (7-812) 559 55 01
E-mail: vvv@AV2467.spb.edu
K N Mukhin, O O Patarakin Russian Research Center 'Kurchatov Institute', Institute of General and Nuclear Physics, pl. Kurchatova 1, 123182 Moscow, Russian Federation
Tel. (7-095) 196 76 63. Fax (7-095) 196 91 33
E-mail: mukhin@chen.net.kiae.su, patarak@dnuc.polyn.kiae.su

Received 27 May 1999, revised 20 December 1999
Uspekhi Fizicheskikh Nauk **170** (4) 353 – 386 (2000)
Translated by G Pontecorvo; edited by A Radzig

At present, the properties of pions are well known. We recall that, in accordance with a present-day classification, π mesons are light unflavored mesons with $S = C = B = 0$, and they have the smallest mass observed not only in this category, but among all strongly interacting particles — hadrons.

Pions exist in three charge states: π^+, π^-, π^0 with the respective masses $m_{\pi^\pm} \approx 139.6$ MeV and $m_{\pi^0} \approx 135$ MeV. Their baryon number, like that of all mesons, is zero. The quark structure of π mesons is as follows

$$\pi^+ = u\bar{d}\,, \qquad \pi^0 = \frac{u\bar{u} - d\bar{d}}{\sqrt{2}}\,, \qquad \pi^- = d\bar{u}\,.$$

All pions are pseudoscalar particles, i.e. they have zero spin and negative space parity ($J_\pi^P = 0^-$).

The π^+, π^- and π^0 mesons are members of an isotopic triplet of isospin $I = 1$ and isospin projections $+1$, -1 and 0, respectively. The π^+ and π^- mesons are the particle and antiparticle of each other, while the π^0 meson is a truly neutral particle of positive charge parity ($C_{\pi^0} = +1$). All the pions exhibit negative G-parity ($G_\pi = -1$). The lifetime of the charged pions $\tau_{\pi^\pm} \approx 2.6 \times 10^{-8}$ s. They undergo weak decays

$$\pi^+ \to \mu^+ + \nu_\mu \quad \text{and} \quad \pi^- \to \mu^- + \tilde{\nu}_\mu\,.$$

The lifetime of the neutral pion measures $\tau_{\pi^0} \approx 0.8 \times 10^{-16}$ s. It decays via the electromagnetic channel $\pi^0 \to 2\gamma$.

Existing high-intensity pion beams have made possible the reliable investigation of numerous processes involving π mesons: production processes in pion – nucleon and pion – nucleus interactions, scattering and nuclear reactions, pion absorption and the formation of π mesoatoms, etc.

The pion is the quantum of *strong* interaction. This means that the influence of pion – pion scattering on the mechanisms

of any reactions involving hadrons may turn out to be quite significant. That is why experimental data on the properties of the $\pi\pi$ interaction are necessary for understanding hadron physics. Such data cannot yet be obtained directly by studying pion scattering on a pion target (although some fifteen years ago discussions did take place of the idea of creating colliding pion beams [1]). Therefore, indirect methods are applied, namely, the investigation of the aforementioned and of other processes in which pions partake. Information on the $\pi\pi$ interaction is extracted from experimental results with the aid of theoretical analysis.

Let us briefly recall the history of the investigation of the $\pi\pi$ interaction.

The first significant publications in this field appeared about 40 years ago. We, first of all, mean the works by Chew and Low [2], and by Goebel [3], which underlie many subsequent studies of reactions of the type

$$\pi N \to \pi\pi N \quad \text{and} \quad \pi N \to \pi\pi\Delta\,.$$

The method proposed in Ref. [2] is based on the assumption of the dominant role of one-pion exchange (OPE) processes in the mechanisms of such reactions. In this case, the characteristics of $\pi\pi$ interaction (cross sections, scattering lengths and phases) are either obtained by fitting experimental results in the physical region or by their extrapolation to the pion pole.

Practically at the same time (1958 – 1962), Gribov, Anisovich and Ansel'm [4 – 8] developed a method that permits the extraction of the characteristics of pion – pion scattering from an analysis of the data on low-energy reactions involving the production of three particles in the final state. In works of 1962 – 1971, Anisovich and his colleagues [7 – 10] described methods for determining the phases of $\pi\pi$ scattering from ($K \to 3\pi$) decays and the scattering lengths from the reaction $\pi N \to \pi\pi N$; in works of 1967 – 1969, Aref'ev et al. [11, 12] presented methods for determining $\pi\pi$ scattering lengths.

In 1966, Weinberg [13] developed a theory of 'soft' pions based on the idea of the chiral symmetry of strong interactions put forward in 1958 by Feynman and Gell-Mann [14]. In the limit of *precise* chiral symmetry the pion mass is zero; the scattering lengths turn out to be small. Since real pions possess masses differing from zero, even though very little (on the hadron scale), chiral symmetry is violated; the respective corrections depend on the violation mechanism. In the pioneering works [15 – 17], extremely simple versions are considered for simulation of this mechanism by introducing one or another sort of violation into the effective Lagrangian of the pion – pion interaction. Quite naturally, the scattering lengths turn out to depend on the structure of the term responsible for the symmetry violation.

A model for simulating the $\pi N \to \pi\pi N$ reaction amplitude based on the ideas of chiral symmetry violation and OPE dominance was proposed by Olsson and Turner [18]. The sole free parameter in this model is the coefficient ξ of the term violating chiral symmetry in the pion – pion interaction Lagrangian. The value of ξ can be determined by fitting experimental data on $\pi N \to \pi\pi N$ reactions at low energies. The simplicity of the model has contributed to its popularity: it has been applied in processing the absolute majority of presently available data. It must, however, be noted that development of the methods of chiral perturbation theory (CPT) has revealed that this model can only claim to be a zeroth approximation, with only the value $\xi = 0$ being consistent with the requirements of quantum chromodynamics (QCD).

In 1968, Pais and Treiman [19] showed that for studying low-energy ($2m_\pi < m_{\pi\pi} < m_K$) $\pi\pi$ interactions it is convenient to make use of the K_{e4} decay ($K^\pm \to \pi^+\pi^-e^\pm\nu_e$) in which pions are the only hadrons present in the final state. However, application of this method turned out to be difficult owing to the extremely small partial width (4×10^{-5}) of this particular channel of the K decay.

A year earlier, in 1967, Golubnichiĭ et al. [20] and Auslander et al. [21] studied the annihilation reaction $e^+e^- \to \pi^+\pi^-$, which permitted the parameters of the dipion ρ^0 resonance to be obtained, and somewhat later (in 1969 – 1972) the pion form factor to be measured [22 – 24] and compared with the predictions of the theory of vector dominance.

Of other early works we shall mention those of Jackson [25] and Petersen [26] that dealt with reggeization of the π exchange and with the description, on this basis, of reactions involving the production of one or two pions. The same issues were also raised in the works of Boreskov, Kaĭdalov and Ponomarev [27 – 30].

A most important role in the further development of theoretical ideas on the structure of fundamental interactions was played by the dual model of the $\pi\pi \to \pi\omega$ reaction amplitude proposed by Veneziano [31]. The theoretical and phenomenological aspects of duality are considered in numerous reviews and books (see, for example, Refs [32 – 35]).

The reviews by Jackson [36], Leksin [37], Basdevant et al. [38], and Petersen [39] and, also, the books by Shirkov et al. [40] and Martin et al. [41], in which dispersion theories of strong interactions at low energies as well as the pion – pion interaction are examined, have greatly influenced the spread and development of the ideas that emerged from studies of low-energy pion physics.

The aforementioned early works, together with subsequent studies performed up to the end of the 70s, were quoted in reviews [42, 43] published in 1981 – 1982. The common conclusion following from these reviews can be formulated as the following items:

(1) At the time, the principal method for deriving information on the $\pi\pi$ interaction consisted in processing data on the reactions $\pi N \to \pi\pi N$ and $\pi N \to \pi\pi\Delta$ and identifying the OPE contribution. This method was widely applied in the region of high energies of the incident pion (see, for example, Refs [44, 45]), and much less at intermediate and, especially, low energies, which complicated obtaining data for small dipion masses (owing to kinematic suppression of this region of the phase space in the case of large incident pion momenta). We note, however, that already in 1963 an analysis of the reaction $\pi^-p \to \pi^-\pi^+n$ at the energy 200 – 300 MeV resulted in the $\pi\pi$ scattering cross section being obtained for the first time [46], and the phase δ_0^0 being derived later for the 280 – 320 MeV range of dipion masses [47].

The principal difficulties of this method consist in the insufficient reliability of OPE identification against background diagrams and the ambiguity of extrapolation to the pion pole. To overcome these obstacles, polarization experiments are required as well as a precise measurement of $\pi N \to \pi\pi N$ reaction cross sections in the vicinity of the threshold.

(2) Besides this main method for obtaining information on the $\pi\pi$ interaction, other methods were also applied, but

for various reasons their contributions turned out to be relatively small. Thus, for example, the fundamental possibility of obtaining reliable information on the $\pi\pi$ interaction followed from the theory of K_{e4} decays. In a number of studies the phase differences $\delta_0^0 - \delta_1^1$ were obtained in the near-threshold region and estimates of the scattering lengths were presented. However, the state of experiments at the time did not permit the possibility to be fully taken advantage of. The statistical material was insufficient, and it had to be enhanced significantly. The work performed by Rosselet et al. [48] happens to be an exception, and at present its results are considered to be the most reliable.

The annihilation reaction $e^+e^- \to \pi^+\pi^-$, which is particularly convenient for determining the scattering length a_1^1, has been utilized quite rarely (however, see Refs [20 – 24]) for studying the $\pi\pi$ interaction. At the very end of the 70s, works were performed by Berglund et al. [49], Dulude et al. [50], Martin and Morgan [51], in which the annihilation reaction $\tilde{p}p \to \pi^+\pi^-$ was used for investigating the region of large $m_{\pi\pi}$. In these studies, it was noted that new pion resonances with widths ~ 200 MeV could exist in the region of $m_{\pi\pi} = 2.1 - 2.3$ GeV. But these were the first, and very not reliable, results (new data on pion resonances are discussed in detail in a recent review by Anisovich [52]).

(3) At the same time as experimental methods for studying the $\pi\pi$ interaction, purely theoretical methods were also being developed and vigorously applied: perturbative analysis of the unitarity condition, dispersion relations, the Roy equations, and duality. The development of the concept of spontaneously broken chiral symmetry (see, for example, the book [53], reviews [54, 55], and, also, the recently published monograph by Weinberg [56]) signified serious progress in the understanding of pion dynamics.

(4) Owing to the application of all the aforementioned methods, quite significant progress had been achieved in the investigation of the $\pi\pi$ interaction by the end of the 70s, but much still remained to be clarified. Indeed, although the behavior of the scattering phases in the elastic region from the threshold up to $m_{\pi\pi} \approx 1$ GeV was known (admittedly, with quite a low accuracy of 15 – 20%), in the 1 – 1.8 GeV region, where the inelastic channels $\pi\pi \to K\tilde{K}$ and $\pi\pi \to 4\pi$ cannot be neglected, no true solution was chosen, while research at even higher energies in the region of $m_{\pi\pi} > 2$ GeV had only just started.

The achievements of the period mentioned doubtless include the revelation of a whole series of new resonance states. However, the situation with the $\pi\pi$ scattering lengths was not so satisfactory. Experimental values of a_0^0 ranged from $-0.006 m_\pi^{-1}$ up to $+0.8 m_\pi^{-1}$ [with the most probable value $(0.2 - 0.3) m_\pi^{-1}$] and, moreover, unexpectedly large values of $a_0^0 = (0.6 - 0.8) m_\pi^{-1}$ were obtained from an analysis of the reaction $\pi^- p \to \pi^0\pi^0 n$ that was apparently best for determining the S_0-wave parameters [57 – 59]. However, in Ref. [59] no large values of the phase δ_0^0 at the threshold (and, consequently, no large a_0^0 value) were noticed. Most likely, experimental investigation of the $\pi^-\pi^+ \to \pi^0\pi^0$ channel is extremely difficult, and this has to be taken into account in the future.

As to the value of a_0^2, it was known to be small and negative [with a spread $(-0.20 < a_0^2 < -0.045) m_\pi^{-1}$, see Table 2 of review [42]]; for a_1^1 the value $\approx 0.035 m_\pi^{-3}$ was assumed, although here, also, the spread was quite large $[(0.02 - 0.1) m_\pi^{-3}]$, so there remain doubts concerning the smooth behavior of the P-wave near the threshold; for scattering lengths with $l \geqslant 2$ there actually exist only estimates: $a_2^0 \approx 16 \times 10^{-4} m_\pi^{-5}$, $a_2^2 \approx 2 \times 10^{-4} m_\pi^{-5}$, and $a_3^1 \approx 10^{-4} m_\pi^{-7}$, which require clarification.

Analysis of the results obtained by the end of the 70s gave rise to a research program that has been implemented in the past two decades. Several surprises were encountered during realization of this program. Thus, for instance, although by the end of the 70s the choice in favor of the down solution in the up-down problem of the behavior of the δ_0^0 phase in the elastic region seemed quite definite, now the problem arose once more: the new solutions happen to include both upper and intermediate solutions.

The problem of light scalars, which for 20 years was also considered fully resolved, again became important: several independent groups 'rediscovered' (practically at the same time) the σ meson — a light scalar – isoscalar state of mass $M_\sigma \sim 550$ MeV and very large width ($\Gamma_\sigma \sim 300$ MeV). In the scientific literature there appeared assertions (based on the analysis of experimental data) attributing a nonet structure to the light scalar spectrum.

In the region of low energies, where the situation had already been quite strained, it became even more important to obtain especially reliable experimental results. To a great extent, this was due to the needs of theory: the accuracy of available data is certainly insufficient for making a confident choice of one or another scenario of chiral symmetry violation. The phase δ_0^0, for instance, must be known with an accuracy up to some degrees, and the scattering lengths up to $0.01 m_\pi^{-1}$. Such achievements may be expected upon completion of work, presently actively under way, on studies of the properties of pionium, of the K_{e4} decay, and of polarization experiments.

The reader is referred to the respective sections of this review in which the mentioned issues are presented in greater detail. We stress that we have deliberately considered no results from the energy range above 1 GeV, where many new interesting results have also been obtained: this has been done in the review by Anisovich [52].

The extreme brevity of the presentation of issues related to the concept of effective theory is due to the limited space available for the publication. Thus, for example, no works on chiral perturbation theory in the heavy baryon limit are considered: this issue should be dealt with in a special review. The reader interested in such questions is referred to original publications [61 – 63] and to review reports [64, 65].

The material of this review is distributed over its sections as follows.

After the Introduction, Section 2 deals with the main methods for deriving information on the $\pi\pi$ interaction from analysis of reactions such as $\pi N \to \pi\pi N$. In the subsequent three sections, theoretical and experimental methods are presented that have recently undergone particular development, but are either insufficiently illuminated (or have never even been mentioned) in previous reviews. Thus, for example, Section 3 presents the work on studies of the K_{e4} decay, which should yield an accurate value for the phase difference $\delta_0^0 - \delta_1^1$. Section 4 is devoted to the investigation of properties of the exotic $(\pi^+\pi^-)$-atom — of pionium, which may make it possible to obtain the precise value of the difference between S-wave scattering lengths, $a_0^0 - a_0^2$. In Section 5, there is an examination of $\pi N \to \pi\pi N$ reactions, in which information on the polarization of the target nucleon is used. This direction of research is considered promising for obtaining

reliable data on the $\pi\pi$ interaction within a broad range of energies.

To facilitate reading, theoretical issues are concentrated within a separate block comprising Sections 6–8: Section 6 presents the modern status of the problem of light scalars; Section 7 deals with the concept of effective field theory and of chiral perturbation theory, and Section 8 examines the currently very important issue of ill-posed problems in the analysis of experimental data, including those related to investigation of the $\pi\pi$ interaction.

The concluding Section 9 presents the final results of studies that have been completed in all the aforementioned fields of research, and deals with prospects for the future. The scientific literature (articles, reviews, books, reports to international conferences) quoted in this review includes publications issued up to, and including, 1999 but, naturally, the given list of references cannot claim to be complete.

2. Studies of reactions of the $\pi N \to \pi\pi N$ type

2.1 Methods of data processing

Starting from the 60s, $\pi N \to \pi\pi N$ processes[1] have served, and still serve, as one of the main sources of information on the $\pi\pi$ interaction. This is due to their relative experimental availability (the cross sections are sufficiently large for accumulating statistics) and, also, to the possibility of relating the observed quantities with characteristics of the $\pi\pi$ scattering and of obtaining (in principle) the complete information on all possible states of the $\pi\pi$ system within a broad range of dipion masses. In this section we shall examine the results of recent measurements and narrate about their subsequent processing.

The main bulk of new results has been obtained during the past decade. Experiments were performed independently by several groups [67–69]; their main goal was to obtain data (total cross sections and distributions) on pion–pion scattering. These experiments are characterized by a clearly visible tendency toward work in the near-threshold region. This is for two reasons. First, the drastic enhancement of the level of experimental and computational techniques permits (effectively, from a statistical point of view) processes exhibiting extremely small cross sections to be dealt with. Second, reactions with low-energy pions happened to be extremely interesting from the point of view of theory (see Sections 6 and 7); this primarily concerns the $\pi\pi$ scattering.

Let us, first of all, introduce the necessary notation (we follow Refs [80, 81]).The amplitude $M^{bc;\,a}_{\beta;\,\alpha}$ of the reaction

$$\pi_a(k_1) + N^{\nu}_{\alpha}(p) \to \pi_b(k_2) + \pi_c(k_3) + N^{\mu}_{\beta}(q) \tag{1}$$

($a, b, c = 1, 2, 3$ and $\alpha, \beta = 1, 2$ are the isotopic indices, $\mu, \nu = 1, 2$ are the nucleon polarizations, and k_i, p, q are the 4-momenta) can be represented in the form

$$M^{bc;\,a}_{\beta;\,\alpha} = [t_a]_{\beta\alpha}\delta_{bc}\,A^{\mu\nu} + [t_b]_{\beta\alpha}\delta_{ca}B^{\mu\nu} + [t_c]_{\beta\alpha}\delta_{ab}C^{\mu\nu} + \mathrm{i}\varepsilon_{abc}\delta_{\beta\alpha}D^{\mu\nu}\,. \tag{2}$$

Each isoscalar form factor X ($X = A, B, C, D$) has the following structure:

$$X^{\mu\nu} = \bar{u}^{\mu+}(q)\,\hat{X}\,\mathrm{i}\gamma_5 u^{\nu-}(p)\,, \tag{3}$$

[1] A list of references issued before 1980 can be found in the previous review [42] (see, also, monograph [66]).

and any one of the 4×4 matrices $\hat{X}$ can be represented in the form

$$\hat{X} = S_X + \bar{V}_X\hat{k} + V_X\hat{\bar{k}} + \frac{\mathrm{i}}{2}\,D_X\left[\hat{k}, \hat{\bar{k}}\,\right]_-\,, \tag{4}$$

where the following (complex) combinations of momenta were introduced:

$$k \stackrel{\text{def}}{=} -k_1 + \varepsilon k_2 + \bar{\varepsilon} k_3\,, \qquad \bar{k} \stackrel{\text{def}}{=} -k_1 + \bar{\varepsilon} k_2 + \varepsilon k_3\,,$$
$$\varepsilon = \mathrm{i}\,\frac{\sqrt{3}}{2}\,, \qquad \bar{\varepsilon} = \varepsilon^*\,, \tag{5}$$

and, as usual, $\hat{k} \equiv k_\mu\gamma^\mu$. The sixteen scalar form factors S_X, $\hat{V}_X$, V_X, T_X ($X = A, B, C, D$) defined in (4) are functions of the five kinematic variables t, ν, $\bar{\nu}$, θ, $\bar{\theta}$:

$$t = Q^2\,, \qquad \nu = kP\,, \qquad \bar{\nu} = \bar{k}P\,, \qquad \theta = kQ\,, \qquad \bar{\theta} = \bar{k}Q\,;$$
$$P \equiv p + q\,, \qquad Q \equiv p - q\,.$$

The form factors (4) are not independent functions: they are related to each other by crossing and Bose symmetry, as well as by the conditions of C-parity [80].

For our further discussion it is important to note that the one-pion exchange diagram only contributes to S_A, while the isobar exchange contributes to all the form factors; it is also essential that the expression for the square of an absolute value of the amplitude contains the form factor S_X with the coefficient $-t$. This means that the distribution over t within the *physically accessible region* contains a term with a characteristic maximum at $t = -m_\pi^2$; this term is due to the one-pion exchange mechanism. Moreover, this same term has a (double) pole in t *at the physically inaccessible* point $t = m_\pi^2$, and becomes zero at $t = 0$ (Fig. 1). These properties serve as the basis of the Chew–Low method [2] (see, also, Ref. [3]) and of its generalization proposed in Ref. [81], since they suggest that the processing of experimental data may result in identification of the mentioned term and, consequently, in the extraction of information on the absolute value of the amplitude squared, describing the $\pi\pi$ interaction *on the mass surface*. A detailed description of the Chew–Low method can be found in monographs [41, 66] and reviews [37, 42] (see, also, Section 2.2).

Another property peculiar to the *low-energy* amplitude of the reaction $\pi N \to \pi\pi N$, namely, the existence, due to

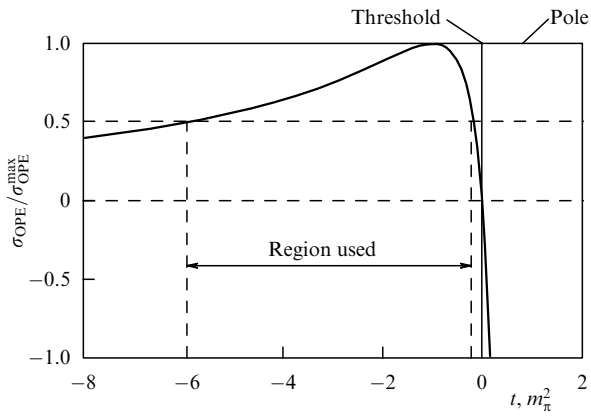

Figure 1. Plot of one-pion exchange diagram contribution, normalized to the maximum value, versus the 4-momentum tranfer. The region is indicated where the OPE contribution exceeds 50% of the maximum value (for $t = -1$). The figure is taken from Ref. [112].

unitarity requirements, of singularities in the kinematic variables of the final state underlies the Anisovich – Ansel'm – Gribov method [8]. Unlike the 'phenomenological' Chew – Low approach, this is a rigorous method based on perturbative solution to the unitarity condition. When complemented by requirements of chiral symmetry and by the corresponding rules for order counting ('chiral counting'), it is equivalent to the currently well-known scheme of chiral perturbation theory (see Section 7).

One more method must be mentioned that is often applied in analyzing data on the reaction $\pi N \to \pi\pi N$. It essentially reduces to the construction of some reaction model, setting part of its parameters in accordance with the authors' tastes (for example, on the basis of known decay widths) and determining the remaining ('free') parameters by fitting the experimental data. The most popular of such models is the Olsson – Turner model [18, 82 – 84]. The postulate of this model assumes the main contribution to the reaction amplitude to be due to only two plots: the $\pi\pi\pi N\bar{N}$ point vertex and the graph with the one-pion exchange. The $\pi N\bar{N}$ and $\pi\pi\pi N\bar{N}$ vertices are obtained from the simplest invariant Lagrangian

$$L_{\pi N} = G_V \bar{N} \boldsymbol{\sigma} \gamma^{\mu} \gamma_5 N D_{\mu} \boldsymbol{\pi} \,,$$

where G_V is the known pseudovector πN-coupling constant, and $D_{\mu}\boldsymbol{\pi}$ is the covariant pion derivative (see Section 7). The vertex describing the $\pi\pi$ interaction is present in the one-pion exchange graph; it is given by the Lagrangian

$$L_{\pi\pi} = \frac{1}{2} D_{\mu}\boldsymbol{\pi}\, D^{\mu}\boldsymbol{\pi} + \xi[\boldsymbol{\pi}^2]^2 \,,$$

where the second term takes symmetry breaking into account. Within the framework of this model, the pion scattering lengths are unambiguously related to the parameter ξ.

Thus, in the Olsson – Turner model a simple expression is obtained for the amplitude of the reaction $\pi N \to \pi\pi N$, which depends on the single free parameter ξ determined by the fitting procedure. Precisely this fact explains its popularity: the absolute majority of experimental groups that studied the $\pi N \to \pi\pi N$ process at low energies applied this model in analyzing the data obtained, and presented as their results the derived value of ξ together with the corresponding S-wave $\pi\pi$ scattering lengths:

$$a_0^0 = R\left(7 - \frac{5}{2}\,\xi\right), \qquad a_0^2 = -R(2+\xi)\,,$$

$$R \equiv \frac{m_{\pi}^2}{32\pi f_{\pi}^2}\,, \qquad f_{\pi} = 92 \text{ MeV}\,. \tag{6}$$

It must be noted, however, that in this case simplicity is not an advantage. Thus, the model does not take into account graphs involving the exchange of one or two virtual nucleons, the existence of which follows from the structure of the Lagrangian $L = L_{\pi N} + L_{\pi\pi}$, *already taken into account*, and from the corresponding kinetic terms. Further, as shown in Ref. [84], only the value $\xi = 0$ is physically admissible; it corresponds to the principal (loopless) order of chiral perturbation theory. Any other value results in a contradiction with QCD requirements. Finally, from purely physical arguments it is quite evident that the $\Delta(1232)$ resonance giving a contribution in the immediate vicinity of the $\pi N \to \pi\pi N$ reaction threshold, may significantly affect the shape of the amplitude.

In connection with the contribution of the Δ-resonance it is necessary to make two comments. First, assertions of its smallness are still encountered in the scientific literature; for confirmation, reference is made to experimental data on the $\Delta \to \pi\pi N$ decay width which is, indeed, very small. It is not difficult, however, to understand that in this case the small width is not due to the amplitude being small, but to the small phase space volume (only ~ 15 MeV) of the three-particle decay channel. Since the same volume is a common multiplier in the expressions for the $\pi N \to \pi\pi N$ reaction cross sections, the reasoning presented above is inconsistent. Second, various methods for taking into account the contribution of the Δ-resonance (the 'simplest' propagator, 'exclusion' of spin $1/2$, etc.) are equivalent up to terms of the nonresonant type if the 'regularizing' term $iM_{\Delta}\Gamma$ is added only to the denominator of the *principal* (i.e. polar) part, the numerator of which is estimated *on the mass surface of the isobar*. If, on the contrary, regularization is performed before factorization of the principal part (which is done usually), then a dependence, which is only controlled with difficulty, upon the scheme for taking the isobar contribution into account is introduced into the model. Precisely for this reason, publications have recently started to appear in which attempts are made to develop a rigorous approach interpreting the isobar as an independent degree of freedom of chiral perturbation theory (see, for instance, Ref. [85]).

One more comment concerning the role of the $\pi\pi$ amplitude in the one-pion exchange plot is appropriate due to the assertion, often encountered in articles, of the allegedly 'off-the-mass-surface' character of the vertex. This is just a misapprehension. It is well known (see, for example, Ref. [86]) that the residue at the pion pole is nothing but the $\pi\pi$ scattering amplitude *on the mass surface of all the pions*. This circumstance is once again especially stressed in Ref. [84].

The final conclusion concerning the 'model' approach to the analysis of data on the low-energy reaction $\pi N \to \pi\pi N$ is the following. Models are interesting as an instrument for revealing the relative importance of one or another reaction mechanism and for estimating orders of magnitude of the parameters. But models are hardly suitable for extracting values of $\pi\pi$ scattering parameters from experimental data. This conclusion is not new (see, for instance, Ref. [41]) and recent results have only confirmed it. We will bear this in mind when describing various methods for processing experimental data, including 'model' approaches.

Above we mentioned the two main approaches to data processing that permit information to be extracted on the $\pi\pi$ interaction: the Chew – Low method (with various modifications) and chiral perturbation theory (as well as its predecessor — the Anisovich – Ansel'm – Gribov method). Both approaches are quite complicated and can be applied only by specially selected groups. For this reason, at present most new data have only been subjected to preliminary processing by fitting the parameters of one or another model; the model employed most often was the Olsson – Turner model that involves the sole parameter ξ. Table 1 (which contains data mainly from Ref. [75]) provides quite a complete picture of the results obtained by various groups. Substitution of ξ from the right-hand column into formula (6) readily shows that as compared with the situation of the beginning of the 80s no special progress is observed. The reason consists not only (and not so much) in the model not being adequate: one can forget about the physical essence and only perceive the model as a method for parametrization of the data. Even though the

Table 1.

Reaction	Year	Reference	ξ
Various	1979	[87]	-2.0 ± 0.2
$\pi^- p \to \pi^+\pi^- n$	1980	[88]	-0.2 ± 0.3
$\pi^- p \to \pi^+\pi^- n$	1980	[89]	-0.05 ± 0.26
$\pi^- p \to \pi^+\pi^- n$	1989	[67]	-0.5 ± 0.8
$\pi^- p \to \pi^-\pi^0 p$	1989	[68]	$0.1^{+0.5}_{-0.7}$
$\pi^+ p \to \pi^+\pi^+ n$	1990	[70]	1.07 ± 0.41
			1.56 ± 0.47
$\pi^+ p \to \pi^+\pi^+ n$	1991	[72]	-0.20 ± 0.15
$\pi^- p \to \pi^0\pi^0 n$	1991	[90]	-0.98 ± 0.52
Various	1993	[91]	-0.60 ± 0.10
$\pi^+ p \to \pi^+\pi^0 p$	1994	[76]	-0.25 ± 0.10
Various	1997	[92]	-0.53 ± 0.13

method is bad, it should be *equally* bad for all the data, if they are consistent with each other. The problem consists precisely in the mutual inconsistency of the data obtained by different groups. A detailed analysis of the situation was given in Ref. [93]. Here, we shall only note that the problem of the inconsistency of various sets of data has significantly more profound roots than it seems at first sight (for details see Section 8).

A description of the works performed applying the Chew – Low method for pion production reactions on a nucleon at high incident pion momenta can be found, for example, in Refs [41, 42]. Note that phase analysis of the $\pi\pi$ scattering is usually performed only considering S-, P-, and D-waves, which is justified for incident pions of not particularly high momenta. In this case it is possible to derive from two to five phases (in various combinations) from various charge channels. Therefore, joint analysis of several channels is desirable. Such an approach was utilized, for example, in Ref. [94], where the data of Ref. [95] were analyzed for four $\pi N \to \pi\pi N$ reaction channels. Extrapolation was performed applying the pseudoperipheral approximation, phase analysis was carried out using both energy-dependent and energy-independent methods. An additional criterion used is selection of events by the van Hove angle [96]. The possibility is taken into account of Δ-isobar production in the final state. As a result, consistent solutions have been obtained for the phases δ_0^0, δ_0^2, δ_1^1, δ_2^0, and δ_2^2 of elastic $\pi\pi$ scattering [in Fig. 2, the example is presented of values of the phase $\delta_0^0(m_{\pi\pi})$]. The following scattering lengths are obtained for the S-, P-, and D-waves:

$$a_0^0 = (0.24 \pm 0.03) m_\pi^{-1}\,, \qquad a_0^2 = (-0.04 \pm 0.04) m_\pi^{-1}\,,$$
$$a_1^1 = (0.034 \pm 0.003) m_\pi^{-3}\,,$$
$$a_2^0 = (7.8 \pm 6.0) \times 10^{-4} m_\pi^{-5}\,, \qquad a_2^2 = (3.8 \pm 1.4) \times 10^{-4} m_\pi^{-5}\,.$$

The technique of Roy equations [97] described in detail, for example, in Refs [41, 66] is often applied for analyzing the $\pi\pi$ scattering amplitude obtained by the Chew – Low method. This technique has already become traditional [94, 98, 247], therefore we shall only briefly recount the works of recent years.

The S- and P-wave phases were determined in Ref. [99] by fitting the entire set of available experimental data relevant to the five charge channels of reaction $\pi N \to \pi\pi N$ within the range of dipion masses from the threshold up to 1 GeV. The Roy equations were applied to find the partial $\pi\pi$ scattering amplitudes. The scattering lengths were varied to obtain the best fit. In Fig. 3, the two-dimensional χ^2 profile is presented

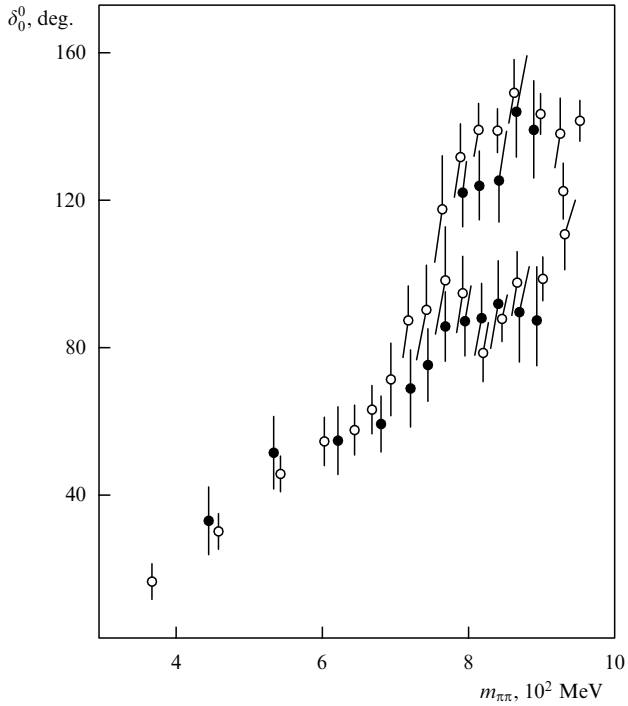

Figure 2. Two versions of the evaluation of the experimental values for the phases $\delta_0^0(m_{\pi\pi})$ derived with the aid of the Chew – Low method from the data for the reaction $\pi^- p \to \pi^-\pi^+ n$ [94].

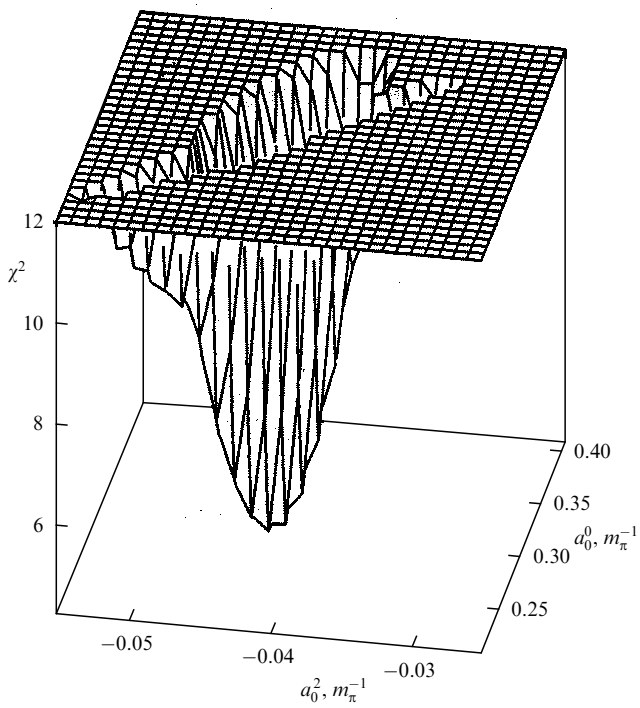

Figure 3. Two-dimensional χ^2 profile for the real part of the S-wave amplitude versus the S-wave scattering lengths [99].

for the real part of the S-wave amplitude versus the scattering lengths. The S-wave lengths are clearly seen to be strongly correlated. This reflects the fact Morgan and Shaw [100] first drew attention to. They noted that the S-wave scattering lengths corresponding to possible solutions within the dispersion approach fall into a narrow region in the (a_0^0, a_0^2) plane. This region has been termed the 'universal curve'.

Now, this conclusion can with certainty be considered correct. The choice of the sole possible solution is difficult, given the accuracy of the experimental data, but the true length values should be expected to lie in the (a_0^0, a_0^2) plane within the limits of the universal curve:

$$0.205 m_\pi^{-1} < a_0^0 < 0.270 m_\pi^{-1}, \quad -0.048 m_\pi^{-1} < a_0^2 < -0.016 m_\pi^{-1}.$$

The work [101], in which the so-called 'internal' dispersion relations were applied, is also relevant to the field of research under consideration. The dispersion integrals were calculated for the region $m_{\pi\pi} > 0.6$ GeV making use of the experimental data on the scattering phases from Ref. [102]. The amplitudes in the vicinity of the threshold were obtained applying unitary models consistent with the experimental data on the K_{e4} decay presented in Ref. [48]. As a result, the partial amplitudes were found for the entire range of dipion masses (including the nonphysical region); the positions were determined of the subthreshold zeros in the S-wave for various possible scattering lengths. Calculated partial amplitudes were shown to be very sensitive to the initial parameters in the vicinity of the threshold, while the condition of crossing symmetry is satisfied only when the values of a_0^0 and a_0^2 lie in the universal curve.

2.2 Experiments of the past decade

We shall now proceed to discuss new experiments aimed at studying various charge channels of the $\pi N \to \pi\pi N$ reaction. We shall start by considering the process $\pi^- p \to \pi^0\pi^0 n$, a remarkable feature of which is that only neutral particles are produced in the final state. This removes the necessity for taking Coulomb corrections into account and permits the detection of outgoing particles closer to the threshold than in the case of the production of charged particles. However, it is very difficult to perform the actual experiment, which in the ideal limit reduces to the simultaneous registration of four γ-quanta from the decay of two π^0 mesons. This explains the moderately late publication of reasonably complete and reliable data for this channel, although the first data on the total cross sections at relatively low incident pion energies (279, 240, and 200 MeV) appeared already in the 70s [103, 104].

A systematic investigation of the reaction $\pi^- p \to \pi^0\pi^0 n$ in the vicinity of the threshold together with a detailed analysis of the results was performed at the Brookhaven synchrotron [75]. A liquid-hydrogen target was placed at the center of a cube consisting of 360 NaI crystals (the so-called Crystal Box, Fig. 4a). Events with charged particles were cut off by special detectors surrounding the target. Operational $\pi^- p \to \pi^0\pi^0 n$ events and $\pi^- p \to \pi^0 n$ events used for normalization were selected by the missing mass method (Figs 4b – e). Data processing resulted in values being obtained of total cross sections together with angular and mass distributions for the reaction at momenta of the π^--meson beam in the range 7 – 140 MeV/c above the threshold. By extrapolating the obtained data to the threshold and applying the Olsson – Turner model, the authors obtained the pion – pion scattering lengths:

$$a_0^0 = (0.207 \pm 0.028) m_\pi^{-1} \quad \text{and} \quad a_0^2 = (-0.022 \pm 0.011) m_\pi^{-1}. \tag{7}$$

There existed several groups active in studies of the $\pi N \to \pi\pi N$ reaction involving the production of pions in other charge states. The set of data obtained by 1984 is presented in Ref. [105]. Since 1989, publications have started to appear which present new data. The Omicron group (CERN) published data on the reactions $\pi^- p \to \pi^-\pi^+ n$, $\pi^- p \to \pi^-\pi^0 p$, and $\pi^+ p \to \pi^+\pi^+ n$ [67 – 71], a group from Erlangen University (PSI) on the reaction $\pi^- p \to \pi^-\pi^+ n$ [73, 74], and a Canadian group (TRIUMF) on the reaction $\pi^+ p \to \pi^+\pi^+ n$ [72]. Data on the reactions $\pi^\pm p \to \pi^\pm\pi^0 p$ were published by a Virginia – Stanford group (LAMPF) [76]. Finally, in 1997 the results were published of an experiment performed at TRIUMF on measurement of the cross sections of $\pi^\pm p \to \pi^\pm\pi^+ n$ reactions at incident pion energies 172 –

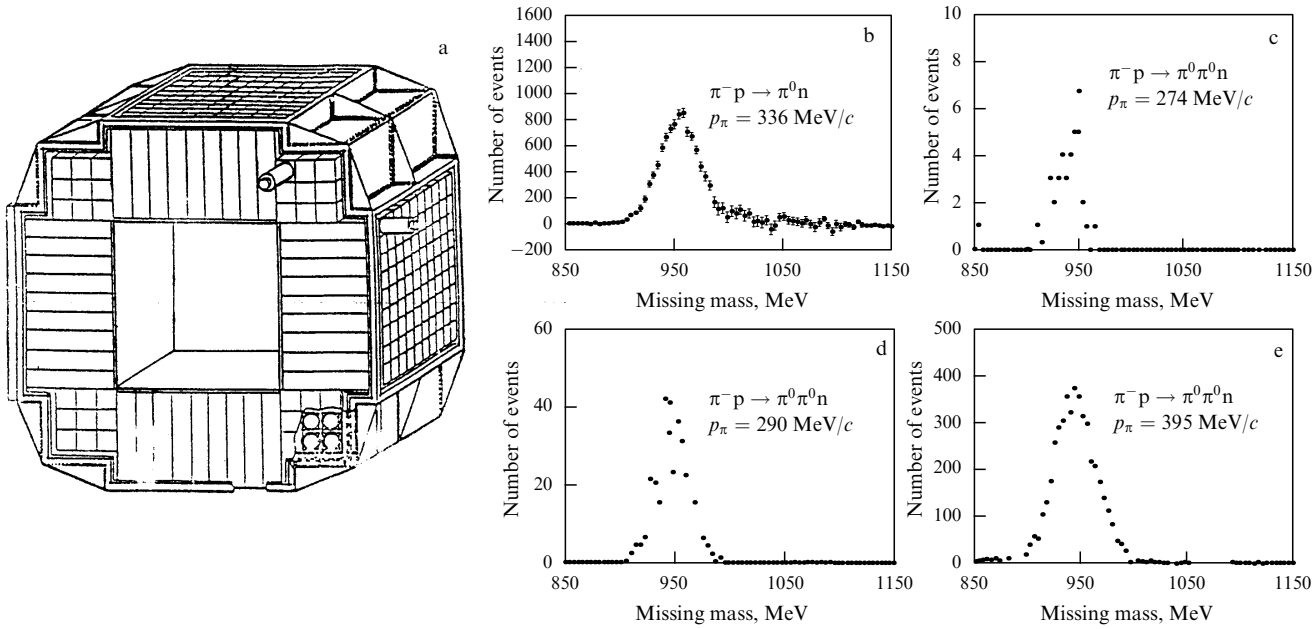

Figure 4. Study of the reaction $\pi^- p \to \pi^0\pi^0 n$ by the Crystal Box method [90]: (a) arrangement of NaI crystals inside the apparatus; (b – e) missing mass spectra for reactions $\pi^- p \to \pi^0 n$ and $\pi^- p \to \pi^0\pi^0 n$ at various momenta.

200 MeV [77 – 79]. The measurement technique was described in Ref. [106].

To give an idea of the difficulties that had to be overcome by experimenters, we will mention certain features peculiar to the detection of particles when charged pions are produced in the final state. The first problem arising in studies of the $\pi N \to \pi\pi N$ reactions in the vicinity of the threshold is to provide a reliable estimation of the beam momentum, since the cross section in this region is very sensitive to variations in its value. This is one of the most dangerous sources of systematic errors in the result. The second problem is the necessity of achieving a compromise between the desire to measure the cross section as close as possible to the threshold (where it is very small, meaning that a sufficiently thick target must be used) and the striving to reduce the energy losses of the charged particles (especially of slow protons) when they traverse the target. The Omicron group dealt with this problem by utilizing a high-pressure hydrogen gas target for the registration of protons, while wire chambers were used for the detection of $\pi^{\pm}$ mesons. Another solution was applied in a study of the reaction $\pi^{\pm}p \to \pi^{+}\pi^{\pm}n$ by a group working at TRIUMF [72], who immediately detected π^{+} mesons in the target, making use of the $(\pi - \mu)$-decay parameters, while the neutron was registered separately (Fig. 5). In this way, results were obtained at an energy that exceeded the threshold by only 6 MeV.

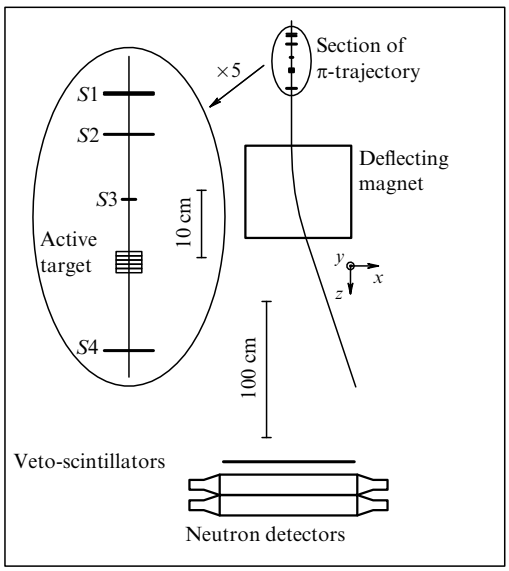

Figure 5. Layout of the experiment performed by Sevior et al. [72]: $S1 - S4$ — plastic scintillators.

In analyzing their data, the Omicron group used the formulae of the Olsson – Turner model for extrapolation to the threshold. The results were presented above in Table 1; on the basis of these results the authors arrived at the conclusion that no consistent description of the data relevant to all four channels can be achieved within the framework of the model applied.

The data published by the Virginia – Stanford group [76] are characterized by the experimental details being elaborated with exceptional thoroughness; this also concerns the analysis [107]. At present this is the sole work in which an attempt has been made to estimate the *systematic* error of the result, due to the deconvolution procedure (taking into account the acceptance and the finite resolution of the detector). Precisely for this reason, the errors obtained by the authors from a preliminary analysis of the data with the aid of the Chew – Low method [108] can, apparently, be considered realistic rather than conservative. Thus, for example, the analysis of data on the reaction $\pi^{+}p \to \pi^{+}\pi^{0}p$ resulted in the value

$$a_0^2 = (-0.055 \pm 0.021) m_\pi^{-1} .$$

Although the uncertainty of this result clearly cannot satisfy the needs of theorists, its size indirectly reflects the obstacles that have to be overcome when extracting information on the mechanism of the one-pion exchange. We once again stress that in this particular case the implementation of the experiment, as well as the method applied for analysis, seem to be irreproachable.

The data of Refs [73, 74] are relevant to distributions in the reaction $\pi^{-}p \to \pi^{+}\pi^{-}n$. They are unique in two aspects. First, they have all been fully published in the form of numerical tables (with corrections taken into account for the acceptance, etc.). This circumstance renders the data available to all: they can be processed by any group, not only the authors of the experiment. Second, they describe 4-dimensional distributions over phase space, i.e. actually the absolute value of the amplitude squared (averaged over the initial and summed over the final nucleon polarizations); distributions of this kind were previously only obtained with bubble chambers which provided much poorer statistic. Unfortunately, the actual distributions were not tabulated, but only a relative characteristic — the so-called W-function equal to the ratio of two measured distributions:

$$W \equiv 4\pi \, \frac{\mathrm{d}^4\sigma}{\mathrm{d}p_{\pi^+} \, \mathrm{d}\cos\theta_{\pi_+} \, \mathrm{d}\cos\theta_{\pi_-} \, \mathrm{d}\phi_{\pi_-}} \bigg/ \frac{\mathrm{d}^2\sigma}{\mathrm{d}p_{\pi^+} \, \mathrm{d}\cos\theta_{\pi_+}} .$$

Neither the numerator nor the denominator were individually tabulated. Moreover, the figures given in the tables are reduced (such is the assertion made by the authors) from the laboratory frame of reference to the center-of-mass system. This would not be a disadvantage if the recalculation procedure could be coordinated with the technique for obtaining the data. However, the formulae presented by the authors unambiguously reveal the applied procedure to be incorrect. Finally, the shape itself of the W-function is extremely inconvenient from the point of view of possible theoretical analysis. Evidently, the circumstances indicated explain why the data of Refs [73, 74] have only been subjected to preliminary (qualitative) analysis. Thus, in Refs [109 – 111] the experimental distributions were shown not to contradict, in the main, the results obtained within the nonrelativistic chiral model taking into account resonances. The same conclusion was made within the framework of Heavy Baryon Chiral Perturbation Theory (HBChPT) [65]. Note is taken, however, that success has not been achieved yet in describing certain characteristic details of the distributions.

The data obtained at TRIUMF [79] on the reaction $\pi^{\pm}p \to \pi^{\pm}\pi^{+}n$ were analyzed with the aid of HBChPT formulae [61 – 63]; the respective scattering lengths are the following

$$a_0^0 = (0.23 \pm 0.08) m_\pi^{-1} , \qquad a_0^2 = (-0.031 \pm 0.008) m_\pi^{-1} .$$

It must be stressed that the errors presented reflect the *theoretical* uncertainty of the HBChPT formulae [61 – 63];

on the other hand, the *statistical* error does not exceed 10% of the actual values.

The data on the reaction $\pi^- p \to \pi^- \pi^+ n$ presented in Ref. [78], also obtained at TRIUMF, were subjected to a more careful analysis making use of the Chew – Low extrapolation technique and of the Roy equations. The results are rather interesting, and we shall present them in greater detail.

The Chew – Low method [3, 2] is described at length in monographs [41, 66] and in reviews [37, 42]. As pointed out above, this method is based on the assumption of the dominant role of the one-pion exchange mechanism. Various modifications of this method are known, the essence of which comes down to including the possible contributions of competing mechanisms. A general approach based on taking into account exact symmetries was proposed in Refs [80, 81]. As it often happens, the weak part of this approach is precisely its generality: the absence of detailed information on competing mechanisms leads to the necessity of introducing a large number of free parameters, which, in turn, requires the existence of very large sets of data. Problems in which many parameters are determined simultaneously usually lack stability (for details see Section 8). Precisely for this reason, application of the Chew – Low method in its most simple versions (involving subsequent investigation of answers concerning small variations in the data, the addition of new parameters, etc.) is of significant interest, providing the possibility of determining the reliability of the method and the *systematic* errors in the results. The first stage of these studies was performed in Ref. [78] (a detailed description is given in Ref. [112]) dealing with the analysis of data on the reactions $\pi^\pm p \to \pi^\pm \pi^+ n$ at incident pion energies between 223 and 305 MeV. The experiment was carried out with the CHAOS installation at the meson factory TRIUMF (Canada). The statistical material for each energy and charge channel was approximately 10,000 events.

The analysis was based on the assumption of OPE dominance in a limited region of sufficiently small t. Events lying in the range $-6m_\pi^2 < t < -0.2\,m_\pi^2$ were selected for performing the extrapolation. An extrapolation function linear in t was used, and the pseudoperipheral approximation [113] was applied. Moreover, data were simultaneously taken into account that corresponded to differing initial energies given the same values of dipion masses (this guaranteed the independence of the obtained pion – pion scattering cross section from the beam energy), and the final pions were assumed to be produced in the S-state. In this case one of the parameters to be fitted was the $\pi\pi$ scattering cross section sought; the second parameter was the inclination determined from (measured) doubly differential cross sections of the reaction studied. The cross sections obtained for the $\pi^+\pi^-$ channel are in good agreement with the results of previous calculations [99] based on the Roy equations [97] with utilization of the complete world database for the $\pi\pi$ scattering phases determined from experiments performed at *high* incident pion energies. This agreement, most likely, means that application of the Chew – Low extrapolation is equally legitimate (or not legitimate) both at high and at low energies.

The S_0-wave scattering length was estimated by various methods. The upper limit $a_0^0 \leqslant (0.238 \pm 0.006)m_\pi^{-1}$ was evaluated from the cross sections found; on the other hand, the threshold expansion yields

$$a_0^0 = \left[0.204 \pm 0.014(\text{stat}) \pm 0.008(\text{syst})\right] m_\pi^{-1}\,. \qquad (8)$$

The authors of the work note that the applicability criteria for the utilized extrapolation technique were not satisfied for all the statistical material. In the case of large dipion masses (the concrete value depended on the initial momentum) no region linear in t was found; the bell-shaped intervals recall a similar shape for events from the vicinity of the Δ-peak in the experiment at $p_\pi = 1.5$ GeV/c.

Even more curious result is the one obtained from the analysis of the reaction $\pi^+ p \to \pi^+ \pi^+ n$: *the applicability criteria for the pseudoperipheral approximation* (linearity of the approximant and independence of the distribution from the pion angle of divergence) *are not satisfied for any one of the intervals of dipion masses*! These facts are extremely important, since they point to manifestations of competing mechanisms. A similar observation relative to the region of smaller $m_{\pi\pi}$ was made in 1995 by Johnson [114], who especially pointed to the necessity of taking into account the background diagrams in analyzing data near the threshold.

In the high-energy region, the importance of including the contribution from background diagrams was understood already in the 70s (see references in paper [42]; recent works are presented in the section dealing with polarization experiments). In the region of low energies ($p_\pi < 500$ MeV/c), the corresponding analysis was performed in Ref. [93], as was its extended version in Ref. [115]. In both cases the conclusions were quite definite: the contribution of the one-pion exchange plot is certainly felt, but its identification within the framework of the generalized Chew – Low method is impossible owing to strong correlations with competing processes. This assertion is quite consistent with the conclusions based on the HBChPT method and presented in works [61 – 63] already quoted above.

Does the above conclusion mean that the Chew – Low extrapolation method cannot be applied for analyzing $\pi N \to \pi\pi N$ reactions? Naturally, no. The problem does not consist in the applicability of the actual method itself (the answer depends on the goal; thus, for example, for estimating the order of magnitude of the cross section one can apply rather rough methods), but in the possibility of estimating the systematic error in the results obtained with its aid. From this point of view, the results of the second stage of the work initiated in Ref. [78] (investigation of the dependence of the answer on the choice of the interval in t, the stability with respect to the introduction of additional parameters, etc.) could turn out to be extremely useful.

To conclude this section, we present in Fig. 6 the presently available experimental data on the total cross sections of $\pi N \to \pi\pi N$ reactions in the vicinity of the threshold, and in Table 2 the results of experimental works aimed at determination of the S-wave $\pi\pi$ scattering lengths. Figure 7 shows the available experimental values for the S- and P-wave phases.

3. The K_{e4} decay

The K_{e4} decay ($K^+ \to \pi^+\pi^- e^+ \nu_e$) is one of the most reliable sources of information on the low-energy $\pi\pi$ interaction. It permits (under minimal model assumptions) information to be obtained on the phase difference $\delta_0^0 - \delta_1^1$ near the threshold. This is explained by the fact that the kinematic dependence of the amplitude due to the *weak* interaction is well known and, consequently, all the deviations observed in experiments are related to the *strong* interaction causing rescattering of the pions produced. The problem is addition-

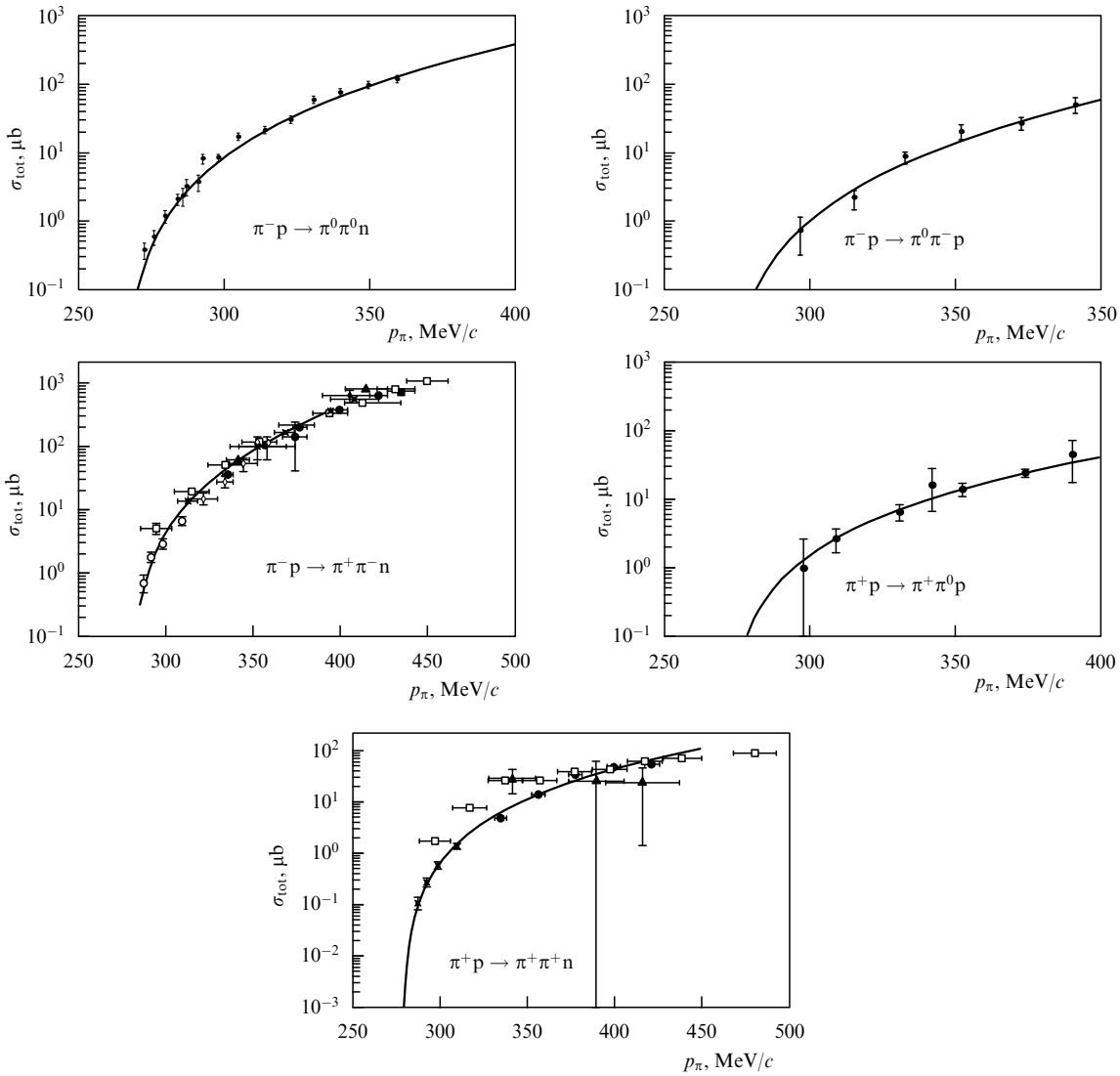

Figure 6. Total cross sections of the $\pi N \to \pi\pi N$ reactions. Data for the $\pi^\pm p \to \pi^+\pi^\pm n$ channels were taken from Ref. [112], and the remaining data were from Ref. [92].

Table 2.

Reaction	Reference	a_0^0, m_π^{-1}	a_0^2, m_π^{-1}
$\pi^+ p \to \pi^+\pi^+ n,\ \pi^+\pi^0 p$ $\pi^- p \to \pi^+\pi^- n,\ \pi^-\pi^0 p$	[94]	0.24 ± 0.03	-0.04 ± 0.04
$\pi^- p \to \pi^0\pi^0 n$	[116]	0.197 ± 0.010	-0.032 ± 0.004
$\pi^+ p \to \pi^+\pi^+ n,\ \pi^+\pi^0 p$ $\pi^- p \to \pi^+\pi^- n,\ \pi^-\pi^0 p,\ \pi^0\pi^0 n$	[90]	0.189 ± 0.011	-0.030 ± 0.002
$\pi^+ p \to \pi^+\pi^0 p$	[76]	0.177 ± 0.006	-0.041 ± 0.003
$\pi^+ p \to \pi^+\pi^+ n,\ \pi^+\pi^0 p,$ $\pi^- p \to \pi^+\pi^- n,\ \pi^-\pi^0 p$	[99]	$0.205 < a_0^0 < 0.270$	$-0.048 < a_0^2 < -0.016$
$\pi^+ p \to \pi^+\pi^+ n,\ \pi^+\pi^+ p$ $\pi^- p \to \pi^+\pi^- n,\ \pi^-\pi^0 p,\ \pi^0\pi^0 n$	[92]	0.193 ± 0.008	-0.034 ± 0.003
$\pi^\pm p \to \pi^\pm\pi^+ n$	[77]	0.23 ± 0.08	-0.03 ± 0.008
$\pi^\pm p \to \pi^\pm\pi^+ n$	[112]	$0.204 \pm 0.014 \pm 0.008$	–

ally facilitated by the fact that the pion pair $\pi^+\pi^-$ produced in the K_{e4} decay possesses little energy, which allows the influence of higher partial waves to be neglected; on the other hand, the $\Delta I = 1/2$ rule restricts the isospin structure of the amplitude to states with $I = 0, 1$.

All this was understood a very long time ago (see, for example, Refs [117–119, 19, 41]), and hence the first experiments aimed at studying the K_{e4} decay were undertaken back in 1969–1973 [120–125]. However, the K_{e4} decay is one of the very rare modes of K^+ decay ($\Gamma_{K_{e4}}/\Gamma_{tot} = 4 \times 10^{-5}$), so a relatively low statistic was accumulated in these experiments, which did not permit sufficiently accurate conclusions on the properties of the $\pi\pi$ interaction to be made.

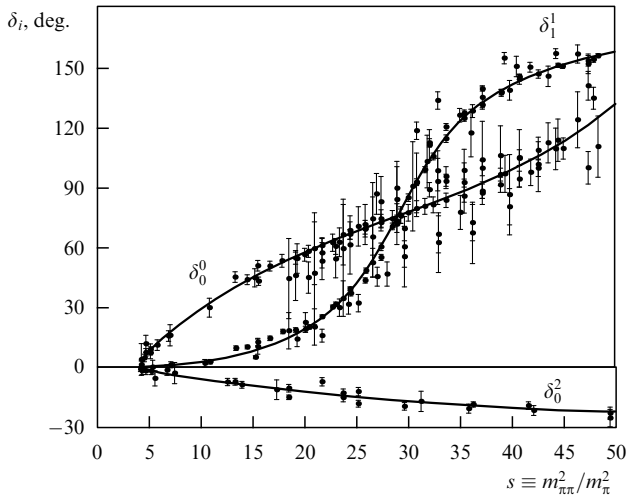

Figure 7. Published experimental values of the S- and P-wave phase shifts for $\pi\pi$ scattering in the dipion mass range from the threshold up to 1 GeV. The figure is taken from Ref. [246].

In recent years work has been actively under way for preparing a new experiment, in which an enormous statistic of $\sim 5 \times 10^5$ K_{e4}-decay events is to be collected. For realization of this project 2 – 3 years will be required (see below). Therefore, we shall briefly present the data obtained in the experiment performed by Rosselet et al. [48], in which quite a high, for the time, statistic ($\sim$ 30,000 events) was accumulated, and five values were obtained for the phase difference $\delta_0^0 - \delta_1^1$ in the dipion mass interval 280 – 360 MeV. At present, the $\pi\pi$-scattering length a_0^0 determined from the data of this experiment is quoted as the most reliable value.

3.1 The data obtained by L Rosselet and others

A derivation of the formulae describing the K_{e4} decay can be found in the original works mentioned above and in the book [41], where a detailed bibliography is given. However, for our purposes it suffices to list the assumptions applied in the derivation. They are the following:

(1) the standard (V – A) theory of weak interactions is applicable, CPT and T symmetries are obeyed, and the $\Delta I = 1/2$, $\Delta Q = \Delta S$ rules hold true;

(2) the electron mass can be neglected;

(3) only the lower partial waves (S and P) contribute to the rescattering of pions.

On the basis of these assumptions and of a reasonable choice of kinematic variables one can write the absolute value of the amplitude squared (summed over the lepton polarizations) in a form convenient for comparison with experimentally found distributions. Here, it turns out that the phase difference

$$\Delta(m_{\pi\pi}^2) \equiv \delta_0^0 - \delta_1^1 ,$$

depending on the square of the invariant dipion mass $m_{\pi\pi}^2$ can be determined in two different ways from relations such as

$$\tan\left[\Delta(m_{\pi\pi}^2)\right] = \frac{X_1}{X_2} , \qquad \tan\left[\Delta(m_{\pi\pi}^2)\right] = \frac{X_3}{X_4} ,$$

where X_i $(i = 1, 2, 3, 4)$ are *independent* functions determined from the results of measurements. The possibility of applying two independent methods for determining Δ from one and the same set of data provides an additional test of the self-consistency of the data.

If the volume of data is sufficiently large for obtaining statistically consistent distributions over various variables, then one can attempt to determine Δ from each individual distribution; this would drastically enhance the reliability of the result. However, even in the experiment presented in Ref. [48], where 30,000 events were successfully attained, the necessity of determining 15 parameters simultaneously led to quite large statistical errors. The final results of this work — the phase differences Δ for five energies — are presented in Table 3 and in Fig. 8.

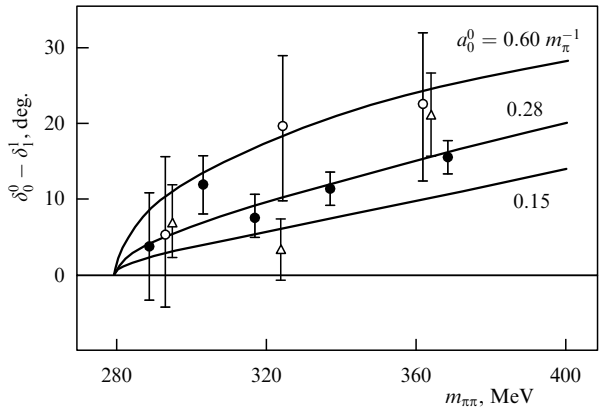

Figure 8. Phase shift difference $\delta_0^0 - \delta_1^1$ from works by Rosselet et al.[48] (circles), Zylbersztejn et al. [124] (squares), and Beier et al. [125] (triangles).

Considering (in accordance with the results of Ref. [98]) the contribution of δ_1^1 to be small (less than 1°) in the dipion mass range dealt with, the authors of Ref. [48] conclude that they obtained δ_0^0.

Besides the phase difference $\Delta = \delta_0^0 - \delta_1^1$, the authors of Ref. [48] obtained (in a model-dependent way) the S-wave $\pi\pi$-scattering length a_0^0. For solution of this problem they used the model presented by Basdevant et al. [98], and according to which in the K_{e4}-decay energy region

$$\sin 2\delta = 2\left(\frac{m_{\pi\pi}^2 - 4m_\pi^2}{m_{\pi\pi}^2}\right)^{1/2}\left(a_0^0 + \frac{bq^2}{m_\pi^2}\right) , \qquad (9)$$

where $b \equiv b_0^0 - a_1^1$, b_0^0 is the inclination of the S-wave, a_1^1 is the P-wave scattering length, and q is the dipion momentum. In accordance with the model assumptions, the quantities b and

Table 3.

$m_{\pi\pi}$, MeV	280 – 296	296 – 310	310 – 325	325 – 347	> 347
Number of events	5,673	6,128	5,941	6,472	6,108
$\langle m_{\pi\pi}\rangle$, MeV	289	303	317	335	367
$\Delta = \delta_0^0 - \delta_1^1$, deg.	4.0 ± 7.4	12.0 ± 4.0	7.4 ± 2.9	11.4 ± 2.3	15.4 ± 2.3

a_0^0 are related as follows:

$$b = 0.19 - (a_0^0 - 0.15)^2 \tag{10}$$

with a theoretical uncertainty of the quantity b equal to ± 0.04. The parameters of the model were determined from solutions of the Roy equations, in which the initial data were set equal to known phase shifts in the dipion mass region 500 – 900 MeV. Substituting into (9) the five found values of Δ and considering a_0^0 and b to be free parameters, the authors of Ref. [48] arrived at

$$a_0^0 = 0.31 \pm 0.11\,, \qquad b = 0.11 \pm 0.16\,. \tag{11}$$

Utilization of relation (10) allowed a more precise value for a_0^0 to be obtained:

$$a_0^0 = 0.28 \pm 0.05\,. \tag{12}$$

The authors stress that this value may vary with modification of the model or with changes in the data on the phase shifts at $m_{\pi\pi} > 500$ MeV. At present, the following value [126] for a_0^0 is considered to be the result of the work [48]:

$$a_0^0 = (0.26 \pm 0.05) m_\pi^{-1}\,. \tag{13}$$

3.2 A new experiment at Brookhaven

Starting from 1993, systematic work has been carried out for the preparation of new measurements of the K_{e4} decay in an experiment under way at Brookhaven (at present it is the experiment E-865; see, for example, Ref. [127]). The layout of the experiment is shown in Fig. 9. In this experiment, use will be made of an unseparated kaon beam of momentum 6 GeV/c, a five-meter decay chamber, a magnet ($D5$) for separating positive and negative particles, and a trigger hodoscope (A-counter). Momenta will be determined by proportional wire chambers ($P1 - P4$) and a second magnet $D6$; particle identification will be performed with the aid of an electromagnetic shower calorimeter, Cherenkov counters ($C1$, $C2$), a stack of iron layers for measuring the range of muons, wire chambers, muon hodoscopes (B- and C-counters), and a device for measurement of the beam trajectory (not of the shower) in the upper part of the decay chamber.

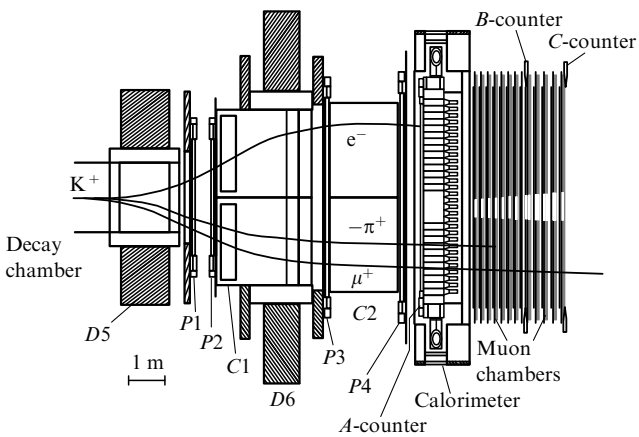

Figure 9. Layout of a new experiment for investigation of the K_{e4} decay [127]: $D5$ — separating magnet; $P1 - P4$ — proportional wire chambers; $D6$ — magnet for determining particle momenta; $C1$, $C2$ — Cherenkov detectors; A-counter — trigger hodoscope; B- and C-counters — muon hodoscopes.

The history of development and the present-day status of the experiment are the following:

1993 – 1995. Development of beam lines, arrangement and installation of detectors, determination of their functions, monitoring trigger counting rate, determination of background conditions, etc.

1995 – 1996. Obtaining data on the processes $K^+ \to \pi^+\mu^+\mu^-$, $K^+ \to \pi^+e^+e^-$ and others.

1997. Data acquisition for $K^+ \to \pi^+\mu^+\mu^-$, K_{e3}-, K_{e4}-decays. Beginning of data analysis.

1998. Long-term data acquisition for the K_{e4} decay. The total amount of events (after introduction of cutoffs and discarding false events) should amount to 3×10^5. At present, about 3×10^5 unprocessed events are recorded on magnetic tapes. Analysis of the data is to be performed in collaboration with theoretical groups of Lund, Frascati, Vienna, Bern, Marseilles, Juelich, Helsinki, Bonn, and Orsay.

4. Investigation of the properties of the $(\pi^+\pi^-)$ atom

Besides the K_{e4} decay, investigation of the properties of which permits the phase difference $\delta_0^0 - \delta_1^1$ to be obtained in a model-independent way, one more method for extracting data on $\pi\pi$ scattering has been proposed and is being systematically elaborated. These are the studies on the properties of one of the exotic hadron atoms — the $(\pi^+\pi^-)$ atom.

Since the lifetime of $\pi^\pm$ mesons ($\tau_{\pi^\pm} = 2.6 \times 10^{-8}$ s) is large in comparison with typical times of cascade transitions between atomic levels ($\tau_{\text{casc}} \approx 10^{-14} - 10^{-11}$ s), a bound state of π^+ and π^- mesons, $(\pi^+\pi^-)_{\text{at}}$, which S Vigdor proposed to term pionium [128], may in principle be formed.

Pionium was predicted in 1986 by Efimov et al. [129]. It is a hydrogen-like atom bound by Coulomb forces, with a binding energy of 1.86 keV and a Bohr radius of 387 fm. A diagram of the energy levels and main decay channels of pionium [128] are presented in Fig. 10a. Calculations presented in Ref. [129] show that the lifetime of pionium in the ground state is determined by its decay via the strong-interaction channel into two π^0 mesons and that by order of magnitude it is $\tau_{1s} \approx 10^{-15}$ s. The relatively large (for a strong-interaction process) value of τ_{1s} is due to the fact that the decay of the $(\pi^+\pi^-)$ atom into $2\pi^0$ is suppressed by the small phase space volume, by chiral symmetry and by competition from the side of channel separating the $(\pi^+\pi^-)$ atom into π^+ and π^- mesons.

The probability for pionium to decay into $2\pi^0$ can be represented by the expression

$$W(2\pi^0) \approx 1.43(a_0^0 - a_0^2)^2 \left|\Psi_{ns}(0)\right|^2\,, \tag{14}$$

and the probability of its electromagnetic decay into two γ quanta is [129 – 131]

$$W(2\gamma) = \frac{2\pi\alpha^2}{m_{\pi^\pm}^2} \left|\Psi_{ns}(0)\right|^2\,, \tag{15}$$

where α is the fine-structure constant, and $\Psi_{ns}(0)$ is the wave function at zero (when the distance separating the particles goes to zero) for the S-state with a quantum number n.

From formulae (14) and (15) it is seen that by measuring the lifetime of pionium in the ground state or the ratio of the decay probabilities $W(2\gamma)/W(2\pi^0)$ one can obtain the square

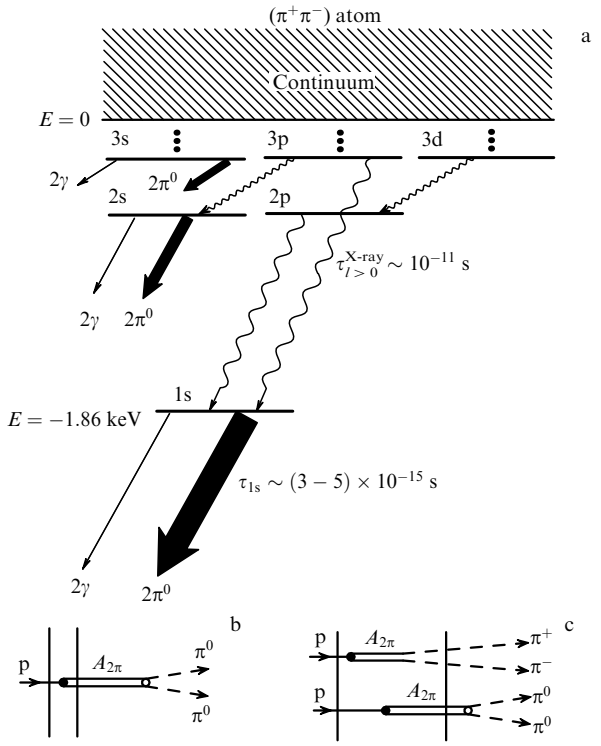

Figure 10. The properties of pionium [128, 137]: (a) diagram of the energy levels and main decay modes of pionium; (b) pionium production in a thin target with subsequent annihilation into two π^0 mesons outside the target; (c) alternative channels of pionium behavior in a thick target: ionization disintegration into π^+ and π^- mesons inside the target (above) and annihilation into two π^0 mesons (below).

of the difference between the scattering lengths $(a_0^0 - a_0^2)^2$ and, as shown in Refs [132–134], the strong-interaction corrections to the Coulomb calculations of $\Psi_m(0)$ are smaller in this case than 1%.

Substituting the S-wave scattering lengths $[a_0^0 = (0.20 \pm 0.01)m_\pi^{-1},\ a_0^2 = (-0.042 \pm 0.002)m_\pi^{-1}]$ found within the framework of chiral perturbation theory into formulae (14) and (15), one can obtain estimates for the pionium lifetime and for the ratio of its decay probabilities via the 2γ and $2\pi^0$ decay channels:

$$\tau_{1s} \approx 3.7 \times 10^{-15}\ \text{s}\,, \qquad \frac{W(2\gamma)}{W(2\pi^0)} \approx 0.005\,.$$

And, on the contrary, if one were able to measure τ_{1s} or $W(2\gamma)/W(2\pi^0)$, then it would be possible to find the value of $a_0^0 - a_0^2$ in a model-independent way. In this case, for obtaining this value with an accuracy of 5% it suffices to measure τ_{1s} or $W(2\gamma)/W(2\pi^0)$ with an accuracy of 10%.

At present, two essentially different methods are under development for measuring these quantities. In both cases pionium atoms are formed from π^+ and π^- mesons produced by bombarding the internal target of the accelerator with a proton beam. But in one of the methods (the method of alternative channels) the target has to be sufficiently thick and have a high density, while the beam must exhibit a high gamma-factor, in order for the pionium to have a noticeable probability of undergoing ionization disintegration along its decay path $l = c\tau_{1s}\gamma$ into $(\pi^+\pi^-)$ pairs. By identifying and counting these pairs, it is possible to estimate the pionium lifetime (Fig. 10c).

In the other method (the method of tagged pionium), the target has to be very thin, while the gamma-factor must be low, so practically all the pionium atoms leave it without undergoing ionization disintegration but decay naturally into two π^0 mesons (and two γ quanta, Fig. 10b). In this case, for estimating τ_{1s} one must somehow single out ('tag') the pionium atoms from all the interaction products of protons with the target and for these pionium atoms measure the ratio $W(2\gamma)/W(2\pi^0)$. Below we shall examine both methods in greater detail.

4.1 The method of alternative channels

As already mentioned, the idea of the method of alternative channels (or the thick-target method) is to compare the pionium spontaneous decay probability with the probability of its ionization disintegration into a pair of charged pions in the case of its traversing a medium with a high electron density. Here, the assumption is made that, on the one hand, the process of ionization disintegration (in particular, the pionium atom deceleration time and path before its disintegration) can be reliably calculated by the methods of the physics of atomic collisions and, on the other hand, it can be investigated experimentally by identifying (in the spectrum of pions created in the target) excess pairs of slow π^+ and π^- mesons resulted from the ionization disintegration of pionium.

By calculation one can estimate the total number of pionium atoms produced in the target and the fraction of those that underwent ionization disintegration. Since disintegration is a reaction channel that competes with the natural decay, one can estimate the lifetime of pionium from the number of registered excess $(\pi^+\pi^-)$ pairs and from the deceleration time before disintegration event that is known from calculations. For this method to be successful, the competition must evidently be noticeable, i.e. the pionium decay length and its mean range in the target before ionization disintegration must be comparable, which is precisely why the high gamma-factor and a sufficiently thick and dense target are required.

The technique described was proposed and tested at IHEP (Serpukhov) [136, 137], and then adopted as the basis of the experiment DIRAC under way at CERN [138]. Below, we shall describe both the experiments.

The layout of the apparatus employed at IHEP is shown in Fig. 11a, b. In the experiment, pionium atoms and free pion pairs were created in a thick (8 μm) tantalum target placed into an internal proton beam of 70 GeV. The pionium atoms either annihilated into $2\pi^0$, or disintegrated inside the target into $(\pi^+\pi^-)$ pairs as a result of interaction with the target atoms. Both the free and atomic $(\pi^+\pi^-)$ pairs landed in the 40-meter vacuum channel and were detected within the 0.8–2.4 GeV/c momentum range with a resolution of 1 MeV/c. The number of atomic $(\pi^+\pi^-)$ pairs depends on the lifetime of the atom, the cross section of ionization disintegration, and the target thickness. Under the assumption that $\tau_{1s} = 3.7 \times 10^{-15}$ s, the annihilation length of pionium in the 1s state equals (in the case of $\gamma = 10$) 11 μm, while its mean free path in a tantalum target is 6 μm (i.e. less than the thickness of the target). For the 10^{11} interactions with the tantalum target in this experiment, an average of 8 pionium atoms was produced in the acceptance region of the apparatus, 40% of which disintegrated in the target into atomic $(\pi^+\pi^-)$ pairs. Check measurements with a thin (1.4 μm) target have revealed that only 10% of the atoms disintegrate in it.

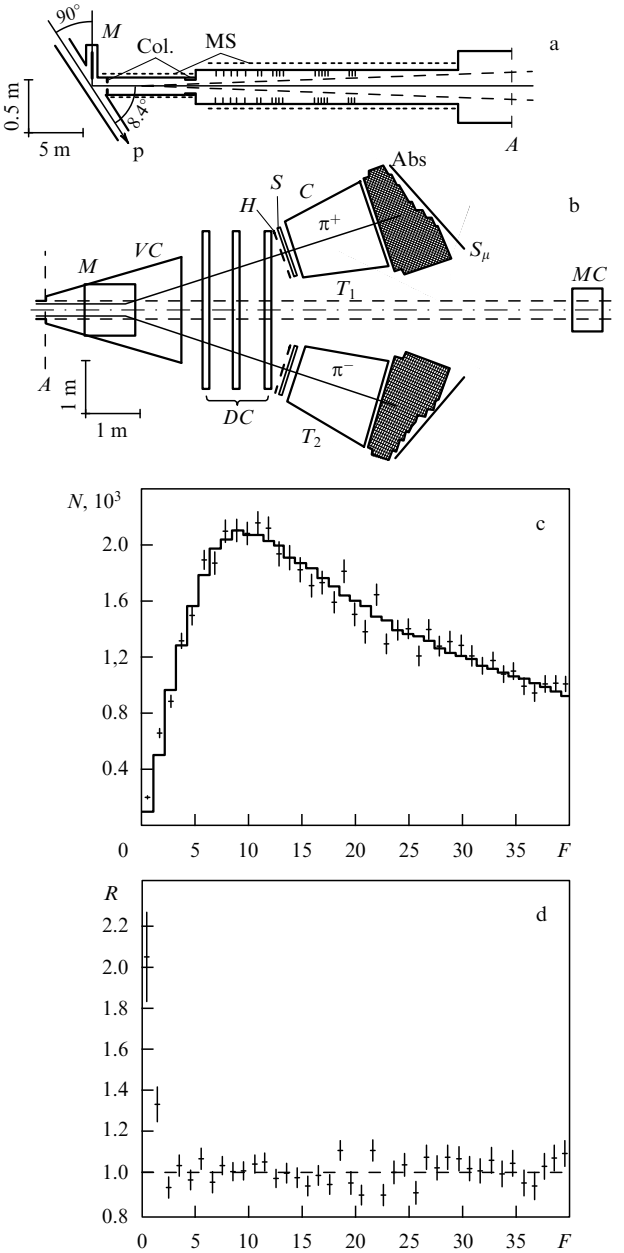

Figure 11. IHEP experiment in Serpukhov aimed at searching for pionium [136, 137]. (a) Layout of the channel: p — internal proton beam; M — target mechanism; Col — collimator; MS — magnetic shielding; (b) magnet and detectors pattern: M — poles of the magnet of the spectrometer; VC — vacuum chamber; DC — drift chambers; H — scintillation hodoscope; S, S_μ — scintillation counters; C — gas Cherenkov counters; Abs — cast iron absorber; MC — monitoring counters; (c) experimental distribution of $(\pi^+\pi^-)$ pairs produced in the thick target versus F (points with error bars) and approximation of the distribution of free pairs (histogram); (d) ratio between experimental and approximating distributions.

Features peculiar to atomic $(\pi^+\pi^-)$ pairs are the small relative momentum ($Q < 3$ MeV/c), i.e. $E_1 \approx E_2$, and a small opening angle $Q_{1,2} = 6/\gamma$ mrad. Figure 11c, d presents the spectra of pion pairs produced in the thick target in the reaction

$$\mathrm{p} + \mathrm{Ta} \to \pi^+ + \pi^- + \mathrm{X}\,,$$

depending on the quantity F:

$$F = \left[\left(\frac{Q_L}{\sigma_{Q_L}}\right)^2 + \left(\frac{Q_x}{\sigma_{Q_x}}\right)^2 + \left(\frac{Q_y}{\sigma_{Q_y}}\right)^2\right]^{1/2},$$

expressing the relative momentum Q of the pair's pions in terms of its longitudinal Q_L and transverse Q_x, Q_y projections, and their standard deviations σ_{Q_L}, σ_{Q_x}, and σ_{Q_y}, respectively. Small F values ($F < 2$ was assumed in the work) obviously correspond to pion pairs from the disintegration of pionium, which have small Q and a small opening angle, while large F ($F > 3$ in the work) correspond to free pairs resulting from random coincidences of π^+ and π^- mesons created in the target.

The histogram in Fig. 11c shows the spectrum of free pairs normalized to the experiment for $F > 3$ and extrapolated to the region of $F < 2$ (corrected for Coulomb interaction). The points with error bars in the same figure demonstrate the experimental spectrum. Figure 11d displays the ratio of the number of pairs measured in the experiment to the number of free pairs given by the histogram. One can see that at small F there exists a noticeable excess of $(\pi^+\pi^-)$ pairs, which can be explained by the production of pionium atoms in the thick target, which subsequently undergo ionization disintegration. A check experiment with a thin target revealed no excess of $(\pi^+\pi^-)$ pairs for small F within the experimental errors. Processing of the data obtained yielded the following numerical values for the excess atomic pairs:

$$n_{\text{thick}} = 272 \pm 49\,, \qquad \bar{\chi}^2 = 1.28\,;$$
$$n_{\text{thin}} = 35 \pm 41\,, \qquad \bar{\chi}^2 = 0.75$$

for the thick and thin targets, respectively.

This result is presumed to be improved in the experiment DIRAC (Dimesonic Relativistic Atom Complex) under way at CERN [138]. The authors of the experimental project [a collaboration including physicists from JINR (Dubna), which took part in the preceding work [136], and from a number of other institutes] hope to obtain for 2–3 years to come about 20,000 atomic pairs from the disintegration of pionium with a relative momentum of pions less than 3 MeV/c and an opening angle less than 3 mrad.

The layout of the experiment is presented in Fig. 12. The proton beam of the CERN PS accelerator with a momentum

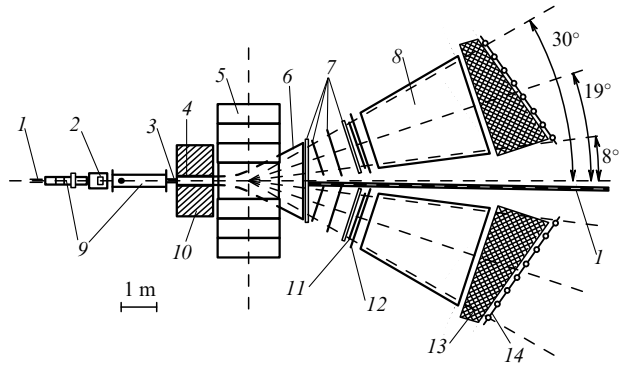

Figure 12. Layout of the experiment DIRAC [138]: *1* — proton beam, *2* — foil targets, *3* — scintillation fiber coordinate detectors, *4* — collimator, *5* — magnet of the spectrometer, *6* — vacuum chamber, *7* — drift chambers, *8* — Cherenkov counters, *9* — vacuum pipe, *10* — radiation shielding, *11* — vertical hodoscopes, *12* — horizontal hodoscopes, *13* — cast iron absorbers, *14* — muon scintillation counters.

of 24 GeV/c will be used together with several different targets, among which the titanium target is considered the most optimal. The resolution of the apparatus for the registration of pions should be of the order of 1 MeV/c, which will permit a large statistic of excess atomic pion pairs with near-zero relative momentum within 2 – 3 bins of its variation to be obtained.

4.2 The tagged pionium method

The idea of the second method described in the work by Betker et al. [139] consists in the identification of pionium atoms by tagging them with the products of some reaction and measuring the $2\gamma/2\pi^0$ branching ratio of the decay channels. Clearly, for realization of this method one requires conditions opposite to those created in the thick-target method. The path of the pionium before its disintegration must be much greater than the decay length, which can be achieved by choosing a very thin (jet) target with low electron density and a small gamma-factor.

According to formulae (14) and (15), the branching ratio for pionium decays into 2γ and $2\pi^0$ is proportional to $(a_0^0 - a_0^2)^{-2}$ and does not depend on the principal quantum number n and possible strong-interaction corrections to the quantity $\Psi_{ns}(0)$. Thus, by measuring the ratio $W(2\gamma)/W(2\pi^0)$ one can hope to obtain in a model-independent way values of $a_0^0 - a_0^2$. In this case it is sufficient to measure only coincidences of γ-quantum pairs with products of the tagging reaction, since thanks to the smallness of the expected ratio ($\sim 0.5 \times 10^{-2}$) the pionium decay via the $2\pi^0$ channel should be accompanied by production of practically all ($> 99\%$) the products of the tagging reaction. However, this idem smallness means a large production frequency of pionium atoms ($> 1{,}000$ at. per day, i.e. about 5 γ-quantum pairs a day) is required. This is hard to achieve, since a high accelerator luminosity is needed, which is quite difficult to provide for in the conditions when using a thin gas target.

In the work [139] dealt with, the possibility was examined of tagging a neutral pionium atom with the $(\pi^+\pi^-)_{\rm at}$ reaction

$$\mathrm{p} + \mathrm{d} \to {}^3\mathrm{He} + (\pi^+\pi^-)_{\rm at}\,, \tag{16}$$

in which the enhanced yield of ^{3}He at a proton energy slightly above the threshold of this reaction (430.5 MeV) would serve for tagging pionium production, while any possibility of detecting $\pi^\pm$ mesons from decays of the pionium continuum (Fig. 10a) into charged pion pairs must be excluded. Below it will be shown that this problem could not be totally resolved, although investigation of the 'contiguous' reaction

$$\mathrm{p} + \mathrm{d} \to {}^3\mathrm{He} + \pi^+ + \pi^- \tag{17}$$

(in practice, with the same threshold and the same ^{3}He tag, but now for a pair of free charged pions) did yield interesting results that permit the prospects for the development of the proposed method to be evaluated.

The layout of the experimental setup is shown in Fig. 13. The storage ring of the cyclotron at Indiana University was used as the proton source [140], and the jet target was a flux of pure deuterium gas 3×10^{15} at. cm^{-2} thick. Bombardment of this target with a 1-mA beam of 2×10^9 accumulated protons cooled by electrons resulted in a luminosity of 10^{31} cm^{-2} s^{-1}.

Downstream the beam from the target a dipole magnet $D1$ was situated for deflection of the accumulated proton beam by 6°, and of the ^{3}He nuclei produced by 13.2°. The beam of ^{3}He nuclei was analyzed in a 5.6-meter magnetic channel (consisting of two dipole magnets $D2$, $D3$ and three quadrupole magnets $Q1 - Q3$) with detectors at its entrance (a small drift chamber and a thin plastic scintillator $S1$) and at its exit (a position-sensitive silicon detector PSD, a second plastic scintillator $S2$, and a stopping intrinsic germanium detector). Triple coincidences of $S1$, $S2$, and PSD served as the trigger. The ^{3}He nuclei were identified by their times of flight between the counters $S1$ and $S2$.

The input part of the apparatus (in the region of the 6° dipole magnet) was surrounded by five plastic counters for recording slow charged pions (with a typical deflection of about 100°) or the muons from their decays. The total probability that these counters would record at least one of the charged pions of a pion pair at the energy 431.5 MeV was approximately 75%. Signals from the counters were used either in the anticoincidence circuit involving the ^{3}He tag in the search for neutral pionium atoms or in the coincidence circuit with the same tag for investigation of free $(\pi^+\pi^-)$-pair production.

The system was calibrated by the two-particle production reaction of a single π^0 meson:

$$\mathrm{p} + \mathrm{d} \to {}^3\mathrm{He} + \pi^0\,,$$

the cross section of which in the vicinity ($\Delta E = 0.7$ MeV) of the threshold (199.4 MeV) is known and equals $\sigma_{\rm tot} = 0.88$ μb [141]. ^{3}He nuclei produced at this energy were identified by

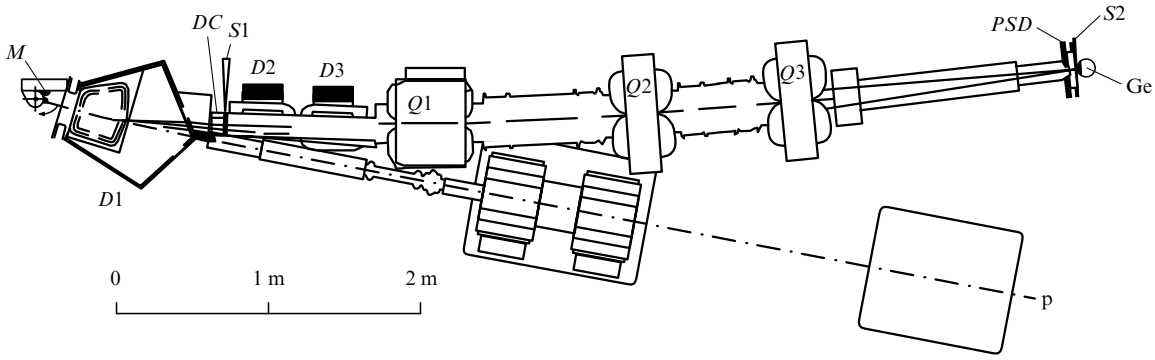

Figure 13. Layout of the experimental setup for investigating pionium by the tagging method [139]: M — target; $D1$ — magnet separating the proton beam and ^{3}He nuclei; DC — drift chamber; $S1$, $S2$ — plastic scintillators; $D2$, $D3$ and $Q1 - Q3$ — dipole and quadrupole magnets for the formation of a beam of ^{3}He nuclei; PSD — position-sensitive silicon detector; Ge — germanium detector; p — line of the cooled proton beam.

their times of flight between the counters $S1$ and $S2$, and the respective opening kinematic cone was determined using a drift chamber. The cross section obtained is identical, up to an accuracy of 10%, with published values [141], while the background turned out to be approximately 10 pb.

The results obtained for the total ^{3}He production cross section, multiplied by the acceptance ($\sigma_{\rm eff}$), in the vicinities of the respective thresholds of $2\pi^0$-pair production (415.4 MeV) and of $\pi^+\pi^-$-pair production (430.5 MeV) are presented in Table 4.

Table 4.

Beam energy, MeV	^{3}He $\pi^\pm$, pb	^{3}He $\pi^\pm$-background, pb	^{3}He $\bar{\pi}^\pm$, pb
412.0 *	32 ± 12		$135 \pm 5{,}5$
429.5 *	16 ± 8		419 ± 41
431.5 *	67 ± 11	51 ± 14	367 ± 26
429.5 **	20 ± 9		541 ± 47
433.5 **	124 ± 19	104 ± 21	566 ± 40

* Results obtained with the energy gate for ^{3}He corresponding to $\pi^+\pi^-$ production at 431.5 MeV.
** The same at 433.5 MeV.

Of the results presented in the table, the most impressive are the data in the second column, obtained for coincidences of ^{3}He production and the registration of π^+, π^- mesons, i.e. in the conditions required for the selection of reaction (17). Comparison of the cross sections for energies above and below this reaction threshold (430.5 MeV) reveal that in the vicinity of the threshold free pairs of charged pions are indeed produced. Considering the data for $E = 429.5$ MeV to be the background, one can obtain $\sigma_{\rm eff}$ for reaction (17) (the third column of the table), and, upon introducing corrections for the total efficiency of the pion scintillator, $(74 \pm 10)\%$, and for the acceptance multiplied by the efficiency of utilization of the phase space, $(91 \pm 5)\%$, — the total cross section of reaction (17) at an energy 1 ± 0.2 MeV above the threshold:

$$\sigma_{\rm tot} = (76 \pm 21_{\rm stat} \pm 11_{\rm syst})\ \text{pb}\,. \tag{18}$$

A similar comparison of the results obtained with the anticoincidence circuit for the yield of ^{3}He involving $(\pi^+\pi^-)$ pairs (the fourth column of the table) reveals that they undergo practically no change when the threshold of the pionium production reaction (16) is crossed, which points to the extremely small cross section of its production, thus hindering observation of the effect. Comparison with the results of Ref. [136], in which the observation of $(\pi^+\pi^-)$ pairs from pionium disintegration is presented (see Section 4.1), makes it possible to obtain an estimate of the pionium production cross section in this work lower than 1 pb. The figures given in the fourth column can be considered the background.

The authors think that, given such a pionium production cross section, its experimental examination requires the background to be reduced by a factor of 100 and the luminosity of the accelerator enhanced by three orders of magnitude (up to 10^{34} cm^{-2} s^{-1}), which at present is beyond the bounds of possibility of modern proton storage rings with cooled beams. In the previously discussed work [128], the hope (based on the results presented in Ref. [142] and on a private communication by H Machner) is expressed that utilization of nuclei heavier than the deuteron as targets will result in an increase in the probability of pionium production.

5. Polarization experiments

The bulk of information on the $\pi\pi$ interaction has been obtained from processing data on $\pi N \to \pi\pi N$ reactions by the method of extrapolation to the pion pole. In principle, this method may give an idea of all the waves of $\pi\pi$ scattering for any values of the dipion mass. However, as already noted, it has two essential defects: the ambiguity in the extrapolation procedure and the difficulty in identifying the OPE contribution. Attempts at overcoming the first defect proceed from enhancing the measurement accuracy of results. Attempts at removing the second defect are based on variation of the incident pion momentum and work in the range of small t; here, the contribution of 'hindering' mechanisms is implicitly conceived totally reduced to zero in the extrapolation procedure. At present, these methods for extraction of the OPE contribution from the data on distributions in $\pi N \to \pi\pi N$ reactions are generally not considered to make the results model-independent. Making use of polarization data is considered more promising.

The idea is simple: the pion exchange mechanism (the pion spin – parity is 0^-) exerts a certain influence on the polarization of the nucleon produced in the $\pi N \to \pi\pi N$ reaction; this influence differs from that due to the exchange of mesons of other spin – parities. It is not difficult to understand that for the same reason the dependence of the reaction amplitude upon the polarization of the target nucleon also turns out to be different for exchanges involving different spin – parities. To summarize, it can be said that the structure of the spiral amplitudes of $\pi N \to \pi\pi N$ reactions carries information on the production mechanism of the dipion. Making use of this fact, we have an additional criterion for the selection of events resulting from the OPE mechanism. We note that in Refs [143 – 147] (polarized proton beam) and [147 – 149] (polarized target) the dependence of the meson production cross section on the initial nucleon polarization was studied experimentally.

Pion production processes in $\pi N_\uparrow \to \pi\pi N$ reactions on a polarized target were first investigated in the works of Becker et al. [150], de Lesquen et al. [151 – 153] and analyzed by Svec, de Lesquen and van-Rossum [154, 155]. An important feature of this analysis is the possibility of studying the spin dependence of pion production directly at the level of reaction amplitudes. We shall briefly describe this analysis.

The experimental results used as initial data in works [154, 155] were from studies of the reaction $\pi^+ n_\uparrow \to \pi^+\pi^- p$ at 5.98 and 11.95 GeV/c with a polarized deuterium target [151 – 153] and of the reaction $\pi^- p_\uparrow \to \pi^+\pi^- n$ at 17.2 GeV/c with a polarized proton target [150].

In the case of $m < 1$ GeV, the dipion system is mainly produced in $J = 0$ (S-wave) and $J = 1$ (P-wave) spin states. The observables are the 15 elements of the spin density matrix that describe the dipion angular distribution. In Refs [153 – 155] they were expressed in the form of two S-wave (S and $\bar{S}$) and six P-wave ($L, \bar{L}, U, \bar{U}, N$, and $\bar{N}$) amplitudes of the transversely polarized recoil nucleon. The letters with overbars correspond to amplitudes of processes in which the recoil nucleon spin is oriented parallel to the normal to the scattering plane ('up'), and those without bars — antiparallel ('down'). L and $\bar{L}$ denote P-amplitudes corresponding to a $J = 1$ dipion spin and to helicity $\lambda = 0$; U, $\bar{U}$ and N, $\bar{N}$ are the combinations of amplitudes with $\lambda = \pm 1$ and opposing nature of the t-channel exchange. The amplitudes S, $\bar{S}$, L, $\bar{L}$, U, and $\bar{U}$ are dominant in the case of anomalous exchange,

while amplitudes N, $\bar{N}$ are dominant in the case of normal exchange.

The difference between the absolute values of the amplitudes of a transversely polarized nucleon is the partial-wave polarization:

$$\tau(A) = |A|^2 - |\bar{A}|^2 = 2\varepsilon \,\mathrm{Im}\,(A_0 A_1^*)\,,$$

where A_0 and A_1 are the amplitudes of nucleon helicity (nonflip and flip), $\varepsilon = +1$ for $A = S, L, U$ and $\varepsilon = -1$ for $A = N$. For the reaction $\pi\mathrm{N} \to \pi\pi\mathrm{N}$, the amplitudes S_0, L_0, U_0 are nonflip amplitudes of the a_1-exchange, S_1, L_1, U_1 are flip amplitudes of the π-exchange; N_0 and N_1 — amplitudes of the a_2-exchange. Table 5 presents 'transverse' states of the target neutron and of the recoil proton, and also of the dipion helicity, corresponding to the amplitudes S, $\bar{S}$, L, $\bar{L}$, U, $\bar{U}$, N, and $\bar{N}$ for the reaction $\pi^+\mathrm{n}_\uparrow \to \pi^+\pi^-\mathrm{p}$.

Table 5.

Amplitude	n	p	$\lambda(\pi^+\pi^-)$
S, L	$\uparrow$	$\downarrow$	0
$\bar{S}, \bar{L}$	$\downarrow$	$\uparrow$	0
U	$\uparrow$	$\downarrow$	+1 or −1
$\bar{U}$	$\downarrow$	$\uparrow$	+1 or −1
N	$\downarrow$	$\downarrow$	+1 or −1
$\bar{N}$	$\uparrow$	$\uparrow$	+1 or −1

From the table one can see that the transverse amplitudes S, L, U, and N describe the production of a dipion state in the case of the recoil nucleon spin being antiparallel with respect to the normal to the creation plane, while the amplitudes $\bar{S}, \bar{L}, \bar{U}$, and $\bar{N}$ describe production in the parallel case. In turn, the amplitudes $S, \bar{S}, L, \bar{L}, U$, and $\bar{U}$ correspond to the nucleon spin flip, and N and $\bar{N}$ to the nonflip case.

The authors of Refs [152 – 155] have demonstrated that with the aid of linear combinations of the aforementioned observables it is possible to obtain the upper limits of the squares of absolute values of the P-wave amplitudes:

$$|L|^2 + \frac{1}{3}\,|S|^2\,, \qquad |U|^2 + \frac{1}{3}\,|\bar{S}|^2\,, \qquad |N|^2 + \frac{1}{3}\,|\bar{S}|^2\,. \tag{19}$$

Their lower limits were determined by subtracting from each term in (19) the values of $\frac{1}{3}|S|^2$ or $\frac{1}{3}|\bar{S}|^2$ calculated individually for each (t, m) interval.

The results presented in Ref. [154] were expressed in the form of plots showing the dependences of $|L|^2$, $|\bar{L}|^2$, $|U|^2$, $|\bar{U}|^2$, $|N|^2$, $|\bar{N}|^2$, $|S|^2$, and $|\bar{S}|^2$ upon $m(\pi^+\pi^-)$ in the 450 – 850 MeV range at a single value of $t = -0.068\ (\mathrm{GeV}/c)^2$ for the reaction $\pi^-\mathrm{p}_\uparrow \to \pi^-\pi^+\mathrm{n}$ ($p_\pi = 17.2$ GeV/c) and at five values of t [between −0.16 and −0.55 (GeV/c)^2] for the reaction $\pi^+\mathrm{n}_\uparrow \to \pi^+\pi^-\mathrm{p}$ ($p_{\pi^+} = = 5.98$ GeV/c).

From the plot structures (Fig. 14a – d) one can see that the process of pion production in $\pi\mathrm{N}_\uparrow \to \pi\pi\mathrm{N}$ reactions depends in a quite complex manner on the character of the 'transversality' of the recoil nucleon for given spin J, helicity λ and kind of exchange σ. Let us consider the example of Fig. 14a, where the plots are presented of $|L|^2$ and $|\bar{L}|^2$, which describe production of the $\pi\pi$ system with $J = 1$, $\lambda = 0$, and $\sigma = -1$. From the figure it is seen that at all t values, with the exception of −0.55 (GeV/c)^2, the dominant amplitude is the 'up' amplitude $|\bar{L}|^2$ which increases with mass and exhibits an unexpected structure in the vicinity of the ρ-meson mass, pointing to the complex dependence of π^--meson production upon the nucleon spin. The large difference in value and behavior between $|L|^2$ and $|\bar{L}|^2$ reveals the existence of a strong contribution from the a_1-exchange to the nucleon nonflip spiral amplitude.

For comparison, plots are given in Fig. 14d of $|S|^2$ and $|\bar{S}|^2$, which describe production of the $\pi^+\pi^-$ system with $J = 0$. From the figure one can see that here the 'up' amplitude $|\bar{S}|^2$ is dominant too, and that when $-t$ varies between 0.15 and 0.45 (GeV/c)^2, the $\pi^+\pi^-$ state is produced with approximately the same (or slightly decreasing) probability for all mass values. An exception is the value $t = -0.55$ (GeV/c)^2 at which the production of the $\pi^+\pi^-$ system with $J = 0$ is suppressed for masses $m < 600$ MeV. In the case of $J = 1$, it can be seen from Fig. 14a – c that the plots of the $|L|^2$, $|\bar{L}|^2$, $|U|^2$, $|\bar{U}|^2$, $|N|^2$, and $|\bar{N}|^2$ amplitudes exhibit the opposite pattern: the amplitudes with $J = 1$ are dominant at $t = -0.55$ (GeV/c)^2.

Thus, the results obtained for production of the dipion in states with $J = 0$ and $J = 1$ differ from each other, which points to the strong dependence of this process on the polarization. The same circumstance is revealed by the complex structure of the plots in the ρ-resonance region: to explain this one must assume the existence of a noticeable contribution from the a_1-exchange. Unfortunately, the analysis undertaken does not permit the separation of the π- and a_1-exchange amplitudes according to the nucleon helicity.

The issue of the relationship between the anomalous exchange (π and a_1) amplitudes in the reaction $\pi\mathrm{N} \to \pi\pi\mathrm{N}$ with a transversely polarized target was considered in Ref. [156]. In this work the results of the amplitude analysis of the data obtained with polarized targets are shown to permit expression of the pion exchange amplitudes in the form of a_1-exchange amplitudes. Since the latter are experimentally unknown, the result of extrapolation of pion-exchange amplitudes to the nonphysical region (for extracting the $\pi\pi$-scattering phases) depends on the model adopted for the a_1-exchange amplitude. Here, the previously existing notion — that the a_1-amplitude can be neglected in performing extrapolation — is ruled out by the data obtained with polarized targets. In this connection, the assertion is made in Ref. [156] that the phase analyses of $\pi\pi$ scattering performed earlier in the region of $m_{\pi\pi} < 1000$ MeV must be considered approximate.

Another interesting result obtained in the considered cycle of studies [152 – 155] consists in the observation of singularities in the mass dependence of S-wave amplitudes, which signify the possible existence of a scalar state $0^{++}(750)$ with $I = 0$ and width 100 – 150 MeV. This conclusion was discussed in greater detail in Refs [157, 158], in which a model-independent amplitude analysis was performed within the dipion mass range below 1000 MeV. It yielded two similar solutions for the absolute values of the S- and P-amplitudes and a four-fold uncertainty in the partial-wave intensity. All four solutions, however, exhibit a resonance structure at masses of 730 or 750 MeV. The width of this structure depends on the solution and varies within the 100 – 250-MeV range.

A similar inference about the existence of a scalar isoscalar $\sigma(750)$ meson was made in 1997 in the work of Alekseev et al. [159] where the following values were obtained for its mass and width: $M = 744 \pm 5$ MeV and $\Gamma = 77 \pm 22$ MeV [2]. The main content of Ref. [159] is related to

[2] The problem of light scalar mesons is dealt with in the next section.

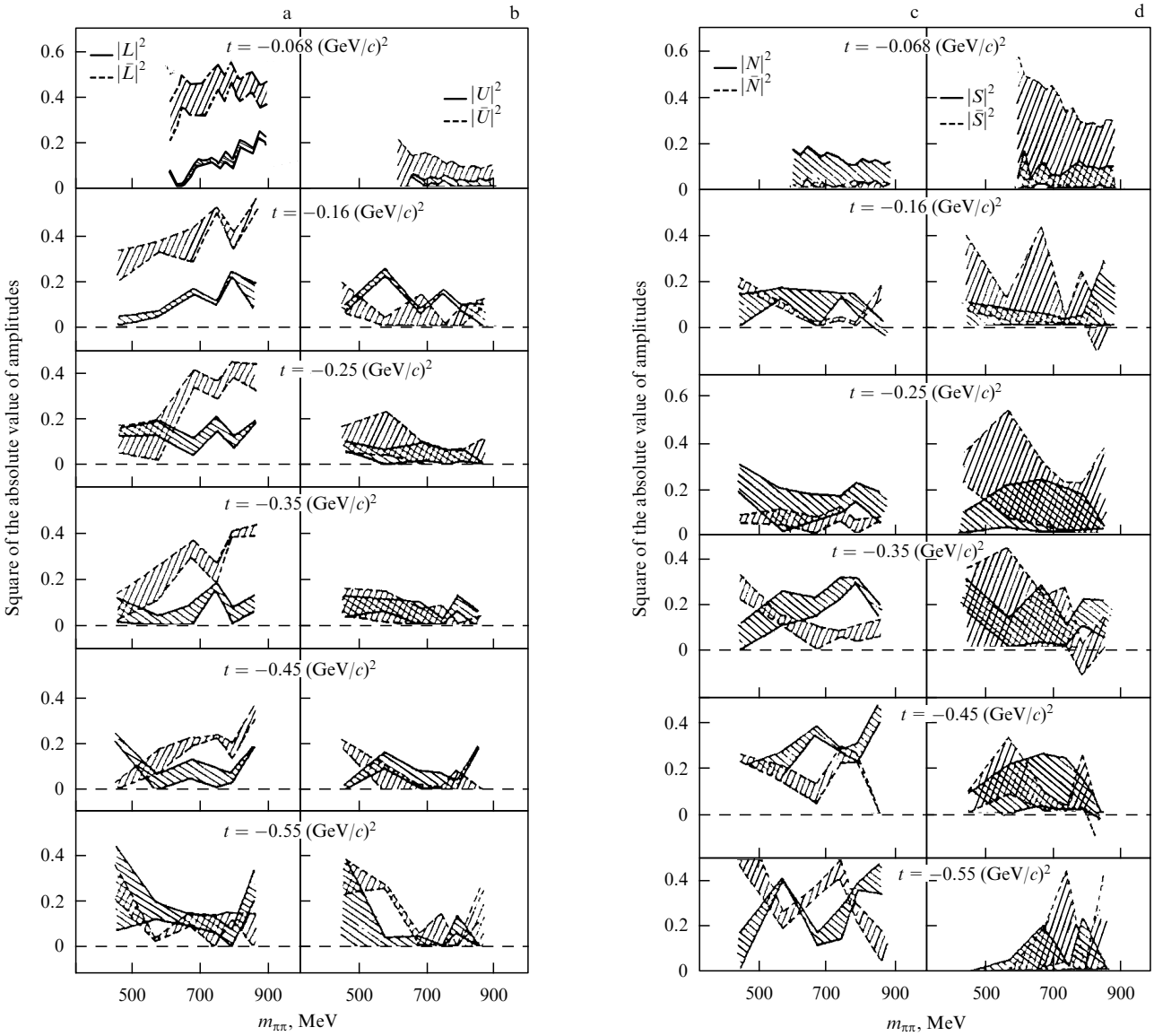

Figure 14. Dependence of the squares of the absolute values of transverse nucleon amplitudes on $m_{\pi\pi}$ at various t for the reaction $\pi^+ n \uparrow \to \pi^+\pi^- p$ (5.98 GeV/c) and at $t = -0.068$ (GeV/c)^2 for the reaction $\pi^- p \uparrow \to \pi^+\pi^- n$ (17.2 GeV/c) [154]: (a) data for $|L|^2$ and $|\bar{L}|^2$; (b) data for $|U|^2$ and $|\bar{U}|^2$; (c) data for $|N|^2$ and $|\bar{N}|^2$; (d) data for $|S|^2$ and $|\bar{S}|^2$.

the investigation of the spin dependence of pion production in the reaction $\pi N \to \pi\pi N$ in the region of intermediate energies, which had not been studied previously. The work was carried out using the SPIN-Ro experimental setup [160, 161] with a polarized proton target situated inside the pion beam of the accelerator at ITEP (Moscow) with a 1.78 GeV/c momentum (Fig. 15). We note that the works performed at ITEP in this field were initiated in the 80s, and preliminary data on the asymmetry of dipion production on a transversely polarized target were already obtained by 1990, which pointed to the spin dependence of the dynamics of meson generation [162].

The final results presented in Ref. [159] confirmed the noticeable spin dependence at a level of six standard deviations. Thus, the spin dependence of pion production in $\pi N_\uparrow \to \pi\pi N$ reactions has been observed both at high (5.98; 11.85, and 17.2 GeV/c) and at intermediate (1.78 GeV/c) incident pion energies. The signs of the dipion production asymmetry are identical in both cases, but its magnitude is 3 – 4 times smaller in the case of intermediate energies. On the basis of amplitude and phenomenological analyses of their experiment, the authors of Ref. [159] arrived at the conclusion

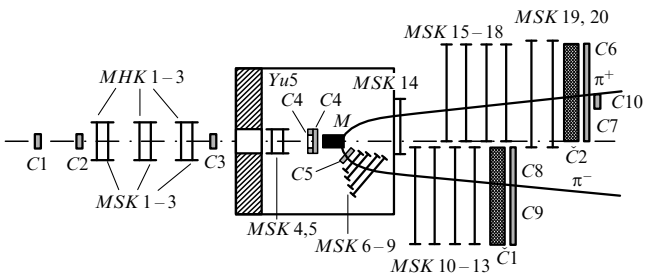

Figure 15. Layout of the ITEP setup [159]: $C1 - C10$ — scintillation counters; $MHK1 - 3$ and $MSK1 - 20$ — magnetostriction hybrid and spark chambers; $Yu5$ — wide-aperature magnet; M — target; $\check{C}1$, $\check{C}2$ — Cherenkov counters.

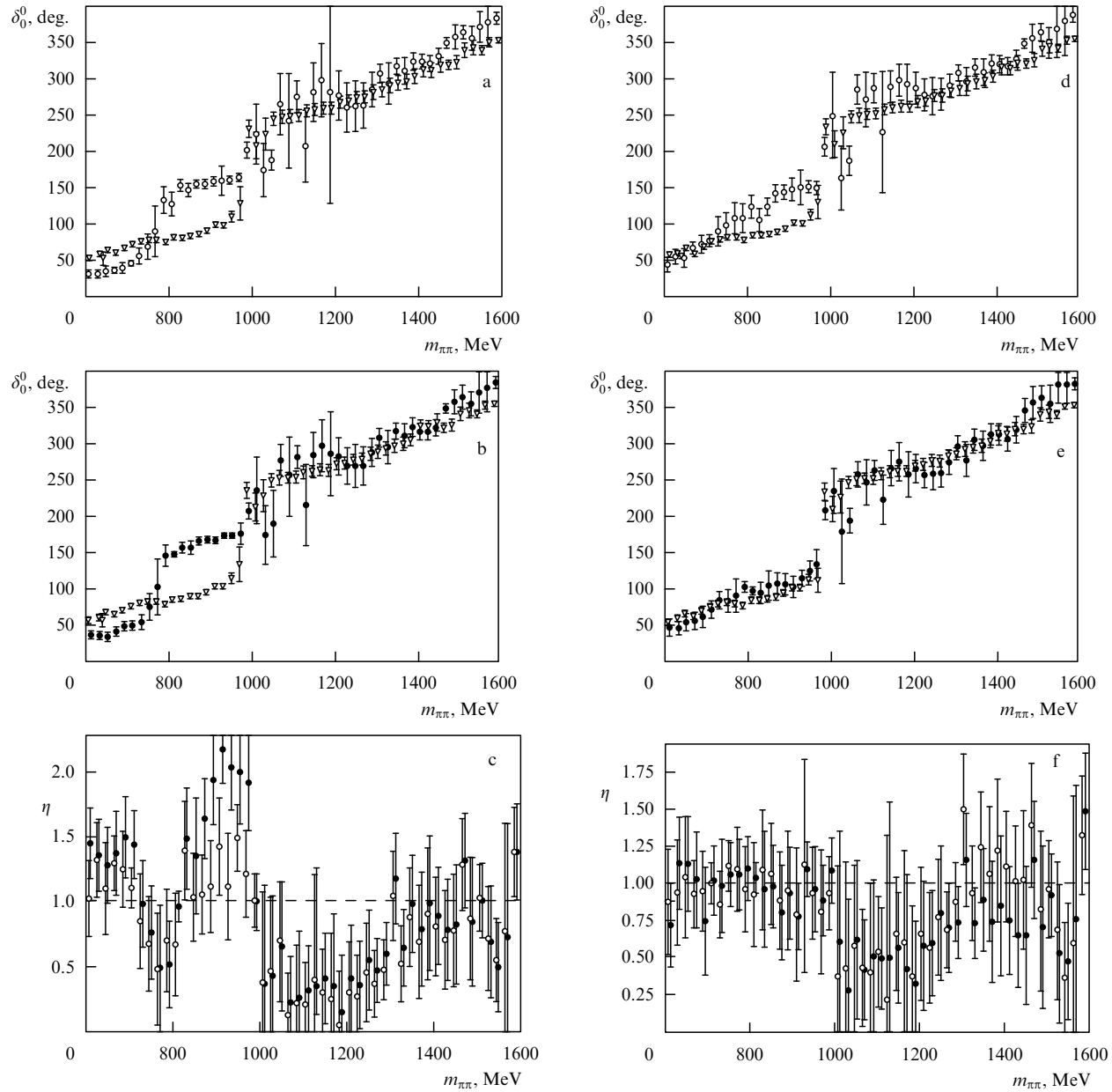

Figure 16. Results of the work [163] for various possible solutions relative to the behavior of the $\delta_0^0(m_{\pi\pi})$ phase.

that the only physically admissible solution to the old up – down problem of pion – pion phase analysis is the up-solution.

The up – down problem was also dealt with in the work of Kaminski et al. [163], where a new analysis of S-wave $\pi\pi$-scattering amplitudes was carried out on the basis of a statistic of 1.2×10^6 events concerning the reaction $\pi^- p_\uparrow \to \pi^+\pi^- n$ at 17.2 GeV/c, accumulated with the aid of a transversely polarized target. The data were obtained by a CERN – Cracow – Munich collaboration in the 600 – 1600 MeV energy range with 20 MeV intervals. Applying significantly weaker assumptions than the ones made in previous analyses, the authors of Ref. [163] performed energy-independent separation of the S-wave pseudoscalar (π-exchange) and the pseudovector (a_1-exchange) amplitudes. They showed that the a_1-amplitude cannot be neglected (especially near 1000 and 1500 MeV) and concluded that the results of previous analyses [164 – 167] should undergo revision, since they were obtained under too strong assumptions — in particular, without taking into account the a_1-exchange. Separation of the π- and a_1-exchanges allowed the authors of Ref. [163] to identify the S-wave amplitude with $I = 0$, given certain (weak) model assumptions. This analysis yielded (already at the level of results expressed in terms of absolute values) two solutions between 600 and 980 MeV (the up-down uncertainty). Further, owing to the lack of information on the relative phases, the assumption was made that the phase behavior of the S-wave depends on its interference with the leading resonances of the P-, D-, and F-waves [$\rho(770)$, $f_2(1270)$, and $\rho_3(1690)$], decaying into pion pairs. The relative phases (positive and negative) that subsequently arise lead to an additional twofold uncertainty, resulting in the formation of four possible solutions for the δ_0^0 phase depending on the dipion mass. The authors of the work discussed termed them 'up-steep', 'down-steep', 'up-flat', and 'down-flat'. These solutions are presented in Figs 16a, b, d, e, respectively. Both

'steep' solutions exhibit a characteristic rapid rise of the phase shift in the vicinity of $m_{\pi\pi} = 760$ MeV. However, a special analysis of the behavior of the inelasticity coefficient η showed that unitarity is violated in the down-steep solution at $m_{\pi\pi} < 1000$ MeV (Fig. 16c), owing to which it can be discarded. The other 'steep' (up-steep) solution turns out to be admissible, although in this case also peculiarities are observed in the behavior of the inelasticity coefficient (Fig. 16f). In this sense both the 'flat' solutions exhibit normal behavior: the inelasticity coefficient in them varies in the region of unity.

As to the possible existence of a scalar – isoscalar resonance σ, in the region of small masses both 'flat' solutions are consistent with the value $\sigma(500)$, while the up-steep solution is consistent with the narrow $\sigma(750)$. At energies below 1420 MeV, the phase shifts of the down-flat solution coincide within the error limits with the solution obtained without making use of the polarized data. However, at higher energies a difference appears that can be interpreted as the influence of the $f_0(1500)$ resonance; this resonance (revealed in Ref. [168]) was discussed in Refs [168 – 170] in connection with the possibility of observing a glueball.

To conclude this section we wish to express the hope that in the future it will be possible to obtain data with fixed polarizations of both (the initial and final) nucleons: this would permit the amplitudes to be separated without making use of model assumptions.

6. The problem of light scalars

In this section we shall present semiphenomenological results relevant to the new interpretation of *old* data on the $\pi\pi$ scattering in the region of low energies. These results were obtained quite recently (the first publication appeared in 1995) and practically simultaneously by two groups — American and Japanese. It is interesting that at the same time a rapid growth occurred in the activity of theoretical research devoted to the corresponding quark models; this growth was to a significant extent stimulated by works [171, 172].

The common result of all the studies mentioned boils down to the assertion of the existence of a broad scalar – isoscalar resonance (the σ meson) in the 500 – 800 MeV region. This statement is not new in itself; what is interesting is that it is based on an analysis of the same data which were previously explained without references to the σ meson. This time, however, evidence in favor of its existence was obtained from different (independent) sources; they turned out to be so weighty that since 1996 the broad scalar resonance has again been included in master PDG tables [173].

A common feature uniting the approaches of the American and the Japanese groups is the departure from the concept of a *narrow* resonance and the explicit provision for the fact that a strong (complex) background can drastically alter the resultant shape of the resonance curve. A striking manifestation of such interference is the transformation of a peak into a crevasse well known from quantum mechanics (the Ramsauer – Townsend effect; see, for instance, Ref. [174]); in Ref. [171] the relevant analysis was performed in terms of field theory.

The ideas underlying the approach of the American group [175 – 177] follow from the concept of effective theory (see Section 7) related to spontaneous violation of the $SU(2) \times SU(2)$ chiral symmetry [in the work on the πK scattering, the $SU(3) \times SU(3)$ group is considered]. In constructing the tree amplitude (i.e. the Lagrangian) of elastic $\pi\pi$ scattering in the region of energies $m_{\pi\pi} \leqslant 1.2$ GeV, contributions are taken into account that correspond to the contact graph and to possible resonance exchanges. The amplitude thus constructed is real; it corresponds to the principal order, while for taking unitary corrections into account it is necessary to calculate the contribution of loops. To avoid this unpleasant procedure, the authors analyze the changes that are to be expected when corrections are taken into account and propose the following:

(1) Compare the theory with experimental data on the *real* part of the amplitude, since the status of a theoretical formula is most reliable in this region (the main contribution is taken into account).

(2) The most important changes due to corrections are to be taken into account phenomenologically, by introducing relevant parameters that guarantee satisfaction of unitarity requirements in the vicinity of the resonance. This is achieved with the aid of the following parametrization of partial amplitudes:

$$a_l(s) = \exp(\mathrm{i}\delta_\mathrm{b}) \sin\delta_\mathrm{b} + \frac{\exp(2\mathrm{i}\delta_\mathrm{b}) MG}{M^2 - s - \mathrm{i}M\tilde{G}}\,, \tag{20}$$

where $s = m_{\pi\pi}^2/m_\pi^2$, δ_b is a slowly varying background phase, and the parameters G and $\tilde{G}$ are independent characteristics of the resonance (G is expressed through the coupling constant in the Lagrangian). Expression (20) generalizes the well-known formula of scattering theory (see, for example, Ref. [174]) and coincides with it in the case of a *narrow* resonance, i.e. when

$$G = \tilde{G} \equiv \Gamma \ll M\,. \tag{21}$$

(3) In comparing theory and experiment, G and $\tilde{G}$ are to be fitted as independent parameters, and the background phase $\delta_\mathrm{b}(s)$ is *to be calculated* with the aid of a constructed effective Lagrangian; this will provide for the procedure being self-consistent.

The fit of data performed by the authors of Refs [175, 176] revealed the following:

(1) When *only* the contact graph is taken into account, the real part R_0^0 of the isoscalar S-wave partial amplitude a_0^0 violates the unitarity restriction

$$\left|R_l^I\right| \leqslant \frac{\eta_l^I}{2} \tag{22}$$

(here $\eta_l^I \leqslant 1$ is an elasticity parameter), starting from the energy $\sqrt{s} \sim 450$ MeV.

(2) Addition of the contribution of the ρ meson (in the t- and u-channel graphs) 'eases up' the situation, but on the whole does not resolve the problem; the same holds true for the contribution of the scalar meson $f_0(980)$.

(3) The problem with the unitarity restriction (22) is *fully* removed up to the energy $\sqrt{s} = 1.2$ GeV, if one additionally includes the contribution of a scalar meson with a mass of the order of 550 MeV and 'width' $\tilde{G} \approx 370$ MeV; in this case the best fit of the data on R_0^0 over three parameters (G, $\tilde{G}$, M) yields the value $G/\tilde{G} = 0.29$.

(4) The sharp jump (with a change in sign!) of the R_0^0 value in the region of $\sqrt{s} \sim 1$ GeV is fully explained by the contribution of the f_0 meson, written in the form (20). In this

region, the phase of the background due to the combined influence of all the remaining graphs turns out to be close to $\pi/2$, and its contribution to the real part is very small. On the contrary, the contribution of the *narrow* resonance $f_0(980)$ at $\sqrt{s} < 980$ MeV is negative, while at $\sqrt{s} > 980$ MeV it is positive, which does result in the sharp jump in R_0^0. This effect is so manifest in plots given in Ref. [176] that the possibility of it being described in a simple manner seems nearly unreal.

(5) The set of ingredients indicated is quite sufficient for describing experimental data on the real part of the $\pi\pi$-scattering amplitude at energies up to 1.2 GeV; moreover, it also turns out to be sufficient for a satisfactory description of the *imaginary* part. This is achieved by resolving the unitarity condition, which is possible since the sufficient condition for (22) to be solvable is satisfied.

(6) Taking into account resonances with masses exceeding 1.2 GeV has practically no effect on the picture described above.

The authors of Ref. [177] implement the same programme with regard to the elastic πK-scattering process and conclude that there exists a scalar $\varkappa$ meson with the parameters $M_\varkappa \approx 900$ MeV and $\tilde{G}_\varkappa \approx 320$ MeV. The results obtained in Refs [175 – 177] are stable with respect to variation of the fitting conditions (the inclusion of the $K\bar{K}$ production threshold, fixing certain parameters, etc.). This property in combination with the purely esthetic attractiveness and physical naturalness of the initial premises permits the belief that the authors found very convincing phenomenological arguments in favor of the necessity of taking into account light scalars (σ and $\varkappa$ mesons) in the structure of the effective Lagrangian.

The approach put forward by the Japanese group in Refs [178 – 183] (the authors have termed it the method of interfering amplitudes) is very similar in its ideological content to the approach described above; the main difference lies in the fact that it is formulated in a more general form, without relation to the concrete dynamics of the process. A method is proposed for parametrization of partial amplitudes that automatically satisfies unitarity requirements when there exist *several* resonances with identical quantum numbers (a simple sum of Breit – Wigner terms does not possess this property) and, unlike the *K*-matrix method, permits a natural physical interpretation directly in terms of the *S*-matrix. Noting that the resulting phase of a partial wave at a given energy is simply the sum of the phase shifts due to resonances and the nonresonance background, the authors write down the *S*-matrix in the form of the product of $n+1$ complex factors of unit absolute value. One factor corresponds to the background, while each one of the others to a resonance (n is the number of resonances that can exist in the energy range considered). At an energy close to the mass of one of the *narrow* resonances, the partial wave assumes the form (20) [where condition (21) is taken into account]; precisely this circumstance (and, also, the assumption that there exists a strong repulsive potential — a core) explains the coincidence of the results obtained by the two groups. By the way, we note that the analysis of data on πK scattering performed in Ref. [180] led the authors to conclude that there exists an isodoublet of scalar $\varkappa$ mesons of mass 900 MeV; this conclusion has been confirmed in Ref. [177].

A detailed exposition of the method of interfering amplitudes would take too much space; to get acquainted with details it would be better to turn to original publications [178] and [181]. We shall here restrict ourselves to making a few comments relative to the general structure of the formulae obtained in these works. First of all, it was shown in Ref. [178] that the method is readily generalized to the multichannel case (which is essential for analyzing $\pi\pi$ scattering in the vicinity of the $K\bar{K}$-creation threshold). Further, it was shown that in the case of a single resonance the parametrization constructed by the method of interfering amplitudes coincides with the one achieved in the modified *K*-matrix approach applied in Refs [184, 185] (and based on the known Dalitz – Tuan representation [186]). Finally, a careful analysis of the correspondence between the three bases of representation of the *S*-matrix ('bare' states, *K*-matrix states, and experimentally seen 'physical' states), performed in Ref. [182], revealed that in those cases when the phase of an elastic process is small and, consequently, when the Watson theorem [187] on interaction in the final state is applicable, the method of interfering amplitudes (together with the corresponding restriction on the free parameters) makes possible the parametrization of the amplitudes of production processes consistent with the requirements of this theorem. On the other hand, in those cases when the elastic phase is large and the Watson theorem cannot be applied, all the parameters must be treated as independent and be determined from the results of fitting.

The findings realized by both groups acquire particular significance, if one takes into account that evidence in favor of the existence of a light scalar has also arrived from independent sources (see Refs [171, 172, 184, 185, 188 – 192]); at the same time the number of theoretical works in which σ and $\varkappa$ mesons arise in a natural manner can hardly be counted. Of the general schemes based on the concepts of spontaneously broken chiral symmetry and effective field theory (see below), it is sufficient to name the classic works by Weinberg [193, 194] and Ogievetskiĭ [195, 196] on the algebraic realization of chiral symmetries, as well as a series of recent publications [197 – 201] on effective theories.

The masses and widths of the σ meson, obtained by the Japanese group, are the following:

$$M_\sigma = 553 \pm 0.5 \text{ MeV}, \qquad \Gamma_\sigma = 242.6 \pm 1.2 \text{ MeV}.$$

The statistical errors indicated by the authors must not be taken too seriously. In the work of the American group it is rightly noted that in the case dealt with the main error is of systematic origin and its value cannot be evaluated (even approximately), since it depends on the method adopted for parametrization of the amplitude. This dependence is due to the very formulation of the problem: without knowledge of the structure of the function describing the data it is impossible to correctly formulate the task of experimental determination of its parameters (in Section 8 we shall consider this problem in greater detail). In this connection, the results of the analysis (performed in Ref. [182]) of the postulate that the manifestation of a resonance is universal for different reactions seems not only interesting, but also extremely timely.

The number of works (see, for example, recent publications [202 – 206]) containing more and more new arguments in favor of light scalars (the σ meson is especially popular) is increasing rapidly; a light broad scalar – isoscalar state has reappeared in master tables [173]. Can this be considered as recognition of the actual existence of broad light scalars? In other words, does this mean that the results obtained by those

authors who have not observed the σ meson when analyzing the *same* (and often significantly wider — see, for instance, the references given in review [52]) databases in which it has now been 'found' are wrong?

An answer to this question cannot be given until we clarify the meaning of the term a 'broad resonance'. Indeed, from an analysis of the arguments *pro* and *contra* presented in the works of different authors, it is possible to note the following.

(A) A light ($m_\sigma \leqslant 750$ MeV) broad scalar state arises in a natural manner in many models related to *dynamic* symmetries. In such cases the language of quantum field theory is applied, and the adjective 'broad' points to the large value of the coupling constant at the vertex describing the decay process in the lowest approximation. The term 'resonance' in this case is inappropriate, since quantum field theory is constructed with the aid of *asymptotic states* that are stable in the absence of interaction. Above, we made use of the term 'state' precisely for this reason. Nevertheless, the behavior of the $\pi\pi$-scattering amplitude at energies close to the mass of this state exhibits a resonance character owing to the presence of the S-channel graph containing the propagator of the σ meson. The renormalization procedure does not shift the value of the *physical* mass (i.e. the real part of the pole's position), but gives rise to an imaginary part that in the lowest approximation is proportional to the respective coupling constant. Precisely this term possesses the shape of a Breit – Wigner peak (if the imaginary part of the pole's position is small as compared to the real part, i.e. if the coupling constant is small). The amplitude also contains other terms that are not resonant-like (in particular, the cross-channel σ-meson exchange) — they correspond to the background. The above means that in the language of field theory the background and resonance contributions are not independent: by 'switching off' a resonance, we also alter the background. Moreover, the existence of a resonance in a given partial wave unambiguously affects the background contributions to other waves: this is a manifestation of the cross-symmetry property which is organically inherent in formulae of field theory *in each order of the loop expansion*. An important consequence takes place: the broader (and hence the less noticeable) a resonance in a given wave, the greater its contribution to other waves, since both its width and the nonresonance contribution are proportional to the coupling constant squared. Nevertheless, separation of the background and resonance contributions is in no way related to the width (and shape) of the peak: it is only determined by the structure of the spectrum of asymptotic states. One of the disadvantages of the field-theoretic approach is that the unitarity condition is satisfied only approximately in any finite order of the loop expansion; the accuracy, however, increases (at least formally) with the order. Another, not less significant, disadvantage is the model dependence of the results, which is due to the necessity of fixing not only the spectral structure assumed, but also the explicit form of the interaction Hamiltonian. These features (together with the complexity of loop calculations) have been the cause of the unpopularity of the field-theoretic method for analyzing data, which was used, for example, in the above-quoted works of the American group.

(B) The formulae applied in performing partial-wave analysis of large data volumes are of a totally different type (termed below *S*-matrix) than those following from field theory in a given order of the loop expansion. In this case, rigorous satisfaction of unitarity requirements in each of the partial waves dealt with is considered most important; this, however, is required neither of the *total* amplitude parametrization form for a concrete (usually, inelastic) reaction studied in a given experiment, nor of the *total* amplitude of the $2 \to 2$ block analyzed. On the other hand, the cross-symmetry condition in the *S*-matrix approach, as a rule, cannot be taken into account even approximately; the same holds true of the restrictions related to dynamic symmetries. The partial-wave analysis of large databases is a complex computational task involving a large number of fitted parameters. Therefore, in the absolute majority of cases the fitting procedures are performed using the most simple versions for parametrization of background contributions: as a rule, only linear approximations are applied. No investigation of the dependence of results upon the chosen type of parametrization is done, since it requires too much computer time for calculating various systems of correlators. It is not difficult to understand that in the case of a *narrow* resonance the approximation of a linear background is quite justified; this is certainly not obvious if the resonance is *broad* and, consequently, can be imitated by the background. Owing to the reasons indicated the identification of broad resonances with the *S*-matrix approach is a very hard task that requires enormous computational facilities.

These comments allow the contradiction between the supporters (S) and opponents (O) of the σ meson to be resolved. First of all, it is necessary to formulate the assertions of the sides clearly.

S: Available data on the low-energy pion – pion interaction are in good agreement with the hypothesis asserting the existence of a broad scalar σ meson of mass $m_\sigma \leqslant 750$ MeV, understood as a separate degree of freedom in the field-quantum description. This claim has been tested with a limited data sample.

O: A scalar meson of mass $m_\sigma < 1$ GeV, understood as the real part of the position of the pole in the partial amplitude, is not revealed by the *S*-matrix analysis of a large set of experimental data on various inelastic reactions carrying information on the $\pi\pi$ scattering.

Recalling the comments made above, it is not difficult to understand that the regions of applicability of the two assertions do not intersect, so no contradiction exists; but, on the other hand, the need for further work on comparison of the field and *S*-matrix languages in analyzing data is obvious.

7. Chiral perturbation theory (CPT)

7.1 Effective field theories

The modern understanding of the problems of low-energy pion – pion interaction is to a significant extent (if not fully) based on the concept of effective field theory. The effective theory idea was first clearly formulated in 1979 by Weinberg in Ref. [207]; there a scheme is presented for constructing an effective theory that takes into account the specific features of quantum chromodynamics and permits the development of a self-consistent approach to the description of low-energy pion interactions. The idea is so elegant and at the same time simple that to understand it (at least, at a qualitative level) no knowledge is required of the sophisticated methods of modern quantum theory. In our presentation we shall follow the article [207] quoted above, and the book [56] by S Weinberg.

The main element in the construction of quantum field theory is the Lagrangian that carries all the information on the system's dynamics and, in particular, on its symmetry. Constructing, on the basis of a given Lagrangian, the respective Hamiltonian (this operation is not always trivial), we obtain the S-matrix:

$$S = T\exp\left(-\mathrm{i}\int H_{\mathrm{int}}(x)\,\mathrm{d}x\right), \tag{23}$$

where $H_{\mathrm{int}}(x)$ is the interaction Hamiltonian (within the interaction picture). The theory *automatically* satisfies the principles of quantum mechanics, unitarity, crossing, microcausality, and symmetry requirements, if the Lagrangian is a local Hermitian function of causal field operators (and of their derivatives) that is invariant under transformations of the respective group (see, for instance, Ref. [56]).

Weinberg [207] formulated the following 'theorem': *a most general theory satisfying the indicated principles can be constructed with the aid of construction* (23)*, if, as the Lagrangian, the most general form of field operators is adopted, only restricted by requirements of Hermiticity, locality, and symmetry*. No proof is known (hence the word 'theorem' is in quotation marks), but the statement, nevertheless, seems extremely plausible and no examples whatever hitherto exist that contradict it.

The statement presented looks somewhat more simple if it is formulated like a recipe for calculations by perturbation theory:

— construct a *most general* interaction Lagrangian that takes into account all the necessary degrees of freedom (fields) and that is consistent with the requirements of the symmetry under consideration;

— in calculating the matrix elements for a certain process take into account *all* the terms that contribute to the given order (according to the number of loops!).

Weinberg's 'theorem' asserts that the result will be a matrix element of the most general form, consistent with the requirements of quantum mechanics, crossing, unitarity, microcausality, and the symmetry under consideration. Article [207] also mentions analyticity (but not crossing), however, this assertion is later (see Ref. [56]) dropped. It can be shown (see Refs [197] and [208]) that the requirement of analyticity can be imposed independently as a condition for the scheme to be self-consistent.

We shall illustrate the above by an example taken from the book [56]. Consider the theory of a real scalar field (a single degree of freedom) $\phi(x)$ symmetric with respect to shifts $\phi(x) \to \phi(x) + \varepsilon$ and reflections $\phi(x) \to -\phi(x)$. Since in this case symmetry forbids terms without derivatives to be present, the most general Lagrangian assumes the form

$$L = \frac{1}{2}\,\partial_\mu\phi\,\partial^\mu\phi + g_1(\partial_\mu\phi\,\partial^\mu\phi)^2 + \ldots\,, \tag{24}$$

where the dots stand for terms with a large number of fields and/or derivatives. To compute the matrix element of the $2 \to 2$ elastic process in the lowest order of the loop expansion (i.e. in the tree approximation), it is necessary in (24) to bring together *all* the terms of the fourth order in the fields and their derivatives. The result has the form

$$M(s,t,u) = a(s^2 + t^2 + u^2) + \ldots\,, \tag{25}$$

where a is a constant, and the dots indicate the terms of higher orders in the kinematic variables s, t, u.

At first sight it seems that we have not learned anything particularly new: expression (25) could have been written on the basis of crossing requirements only with a precision up to an unknown constant term (also no linear term is present, owing to crossing symmetry and to the condition $s + t + u = 0$). This impression, however, is wrong: *a theory based on Lagrangian* (24) *turns out to be renormalizable in each order of the loop expansion*. This assertion seems a paradox, since none of the terms in the Lagrangian belongs to the renormalizable type. Nevertheless, it holds true, and the reason is nearly obvious. The structure of divergences in the theory is well known to comply with the same symmetry restrictions as the Lagrangian (naturally, if no artificial violation is introduced by the regularization). Under the conditions of the problem our Lagrangian contains *all* terms consistent with symmetry requirements. This means that any kind of divergence can be taken up by corresponding coefficients.

Upon learning that the theory possesses the pleasant property of renormalizability, it is natural to ask the question: what have we sacrificed for achieving this property? The answer is evident: in no way whatsoever has renormalizability brought us closer to resolving the problem, since for obtaining a reasonable result one must, upon performing renormalization (in a given order of the loop expansion!), set the physical values of an infinite set of coupling constants, which is not realistic. If so, then does our construction have any sense at all? Weinberg gives a positive answer to this question and notes that in those cases, when spontaneously broken symmetry is considered (so the theoretical spectrum contains a Goldstone boson), the construction described above permits elaboration of a perturbation theory in powers of the momentum (or, which is equivalent, in powers of s, t, u). In this case there appears in each finite order a *finite* number of constants, which are to be determined with the aid of the experimental data.

The above-considered example of a theory with the Lagrangian (24) permits this statement to be illustrated. Thus, in the lowest nontrivial order the amplitude of the $2 \to 2$ process is fully determined by the fourth-order vertex (in the derivatives and, consequently, momenta) $g_1(\partial_\mu\phi\,\partial^\mu\phi)^2$. The first correction to this result arises also from the tree graph corresponding to the vertex with two additional derivatives of the form

$$g_2(\partial_\mu\,\partial_\nu\phi\,\partial^\mu\,\partial^\nu\phi)(\partial_\alpha\phi\,\partial^\alpha\phi)\,;$$

it is of the sixth order in the momentum. The next correction (the eighth power) results from the one-loop graphs with two vertices of the fourth order (their contribution $\sim g_1^2$) and from tree graphs with vertices involving eight derivatives. When dimensional regularization is applied, all the divergences are removed by renormalization of the coupling constants at the vertices of the eighth order (for discarding second- and fourth-power divergences in certain schemes, it is also necessary to perform renormalization of the constants at the vertices involving four and six derivatives). Besides the polynomial, one-loop graphs also yield nonanalytic contributions ($\sim g_1^2$) of the form

$$s^4\ln s + t^4\ln t + u^4\ln u\,,$$
$$(st)^2\ln u + (tu)^2\ln s + (us)^2\ln t\,,\ldots$$

It is not difficult to understand that these corrections to the tree contributions provide for the satisfaction of the requirements of unitarity in the considered order in the momentum.

The attentive reader may have noticed that the simple rule presented above for counting the order of the loop contribution ($8 = 4 + 4$) is certainly not self-evident. There is no doubt that a vertex with four derivatives ($\sim g_1$) is of the fourth order in the momentum. The problem is that at a loop's formation two of the four lines become internal; in this case the corresponding momentum is not small and our rule for counting order may turn out to be erroneous. Luckily, this does not happen. In Ref. [207], a formula has been obtained that permits the order v (from the momentum) of any arbitrary connected graph to be counted:

$$v = 2(N_L + 1) + \sum_d N_d(d - 2)\,. \tag{26}$$

Here N_L is the number of loops in the graph, and N_d is the number of vertices (i.e. the number of derivatives) of order d. From relation (26) one can see that when $d \geqslant 2$ (in our case $d = 4$), the principal contributions are due to graphs with the minimal number of loops.

Thus, we see that in those cases when symmetry forbids interactions with a small number of derivatives, it turns out to be possible to construct a perturbation theory in the momentum. We shall naturally obtain no dynamic consequences here with the exception of the ones present in the initial postulates: Lorentz invariance, causality, unitarity, symmetry and crossing. But the point is precisely that the corresponding restrictions in the region of small momenta turn out to be extremely strong! The reason naturally lies in the fact that the symmetry considered imposes very rigorous restrictions on the interaction dynamics. Freedom in the choice of constants appearing in the amplitude expressions reflects the incompleteness of our knowledge about this dynamics: the symmetry properties are only known to us. It is essential that the field ϕ as such may not even be present in the list of fundamental fields; it may correspond to a bound state. This is the meaning that should be attributed to the term 'effective theory'. Within the framework of any *fundamental* theory exhibiting the same symmetry, the values of all our constants would be rigorously fixed by the values of its parameters.

In connection with the example considered it is necessary to underline a purely technical point, which is extremely important for correct computation of loop graphs. The point is that Lagrangians such as (24) contain too many derivatives. It is well known (see, for instance, Ch. 7 in the monograph [56]) that in this case transition from the Heisenberg representation to the interaction representation is not trivial: noncovariant terms arising simultaneously in the interaction Hamiltonian and in the propagators do not cancel out and together they give rise to additional (singular) Lorentz-invariant terms in the action functional. Neglect of these terms may lead to divergences violating the initial symmetry [209].

The concept of effective theory also contains one more noteworthy detail. The point is that the Lagrangian of such a theory is bound to contain derivatives of the higher orders, besides higher powers of the first-order derivatives. This property results in serious difficulties in the construction of the respective Hamiltonian which, in turn, is needed for obtaining a correct set of Feynman rules. In dealing with a given order *in the momentum* this problem can, in principle, be resolved; on the other hand, the structure of the theory in a given order of the *loop* expansion remains unclear. That this problem is serious is evident, but its solution remains unknown. Nevertheless, the idea itself of the method is so attractive that at present it is widely applied for describing strong interactions in the region of low energies, in particular, the pion – pion interaction.

7.2 The CPT scheme

The idea of describing low-energy strong interactions from the standpoint of effective field theory and the outline of the corresponding calculations presented by Weinberg in Ref. [207] were developed and transformed into a complete computational construction by Gasser and Leutwyler in a series of works [210, 211] devoted to chiral perturbation theory (CPT). At present this theory has undergone such development that it has actually become an independent field of research, certainly not restricted to the limits of low-energy hadron physics. (To become acquainted with it, we recommend the books [56, 212] and the reviews to be quoted below.) The number of articles published annually is so large that it is quite impossible to mention even the most important results; we shall therefore only touch upon those directly relevant to the pion – pion interaction.

Chiral perturbation theory (in its simplest version) is nothing but an effective field theory exhibiting the same (approximate) symmetry as quantum chromodynamics, which is appropriate for describing low-energy interactions of particles from the lightest octet of the SU(3) group (π, K, and η mesons). The QCD Lagrangian is known to exhibit approximate $\mathrm{SU}(3) \times \mathrm{SU}(3)$ chiral symmetry, which arises due to the relatively small (on the hadronic scale) masses of the triplet of light quarks (s, u, d). This means that an attempt at constructing a perturbation theory in which hadron momenta and quark masses (rendered dimensionless by some parameter $\Lambda \sim 1$ GeV) would serve as parameters is not quite senseless, at least, in the region of small momenta. Unfortunately, the structure of QCD in this region is extremely complicated: the property of confinement makes it impossible to draw any conclusions from calculations based on conventional perturbation theory. One may, however, try to construct an effective theory taking into account characteristic features of QCD — the confinement and approximate chiral symmetry. The property of confinement signifies that only hadron degrees of freedom should be present in the spectrum of the effective theory. On the other hand, taking into account symmetry properties is complicated by the fact that characteristic features of the hadron spectrum do not reveal any parity doublets, which would serve as an important indication of the existence of $\mathrm{SU}(3) \times \mathrm{SU}(3)$ chiral symmetry. This complication does not give rise to any problem, since the corresponding physical picture — spontaneously broken symmetry — is well understood at present; an excellent exposition is to be found in the monographs [56, 213].

The modern conventional picture of the low-energy physics of strong interactions is the following. Chiral $\mathrm{SU}(3) \times \mathrm{SU}(3)$ symmetry, which represents an exact QCD symmetry in the case of light quarks with zero masses, is spontaneously broken by the appearance of nonzero vacuum expectations for combinations of quark fields such as $\langle\bar{\psi}\psi\rangle$ (so-called condensates); here, the common SU(3) symmetry remains exact. Spontaneous breaking of symmetry causes the appearance of an octet of massless pseudoscalar mesons

(Goldstone bosons) that acquire mass from the direct (explicit) symmetry-breaking effects due to the fact that the masses of light quarks differ from zero. The effects of direct breaking of symmetry (including, also, mass splitting within the octet) can be taken into account in a perturbation theory, the zeroth approximation of which must be based on a Lagrangian invariant with respect to chiral group transformations. The key point in this scenario is the condition guaranteeing the structure of the spectrum of states being consistent with the existence of *spontaneously* broken chiral symmetry. This condition means that the objects on which the chiral group representation is realized are multiparticle states differing only in the number of soft Goldstone bosons; this, naturally, has nothing to do with the zeroth-approximation exact symmetry transformations forming the SU(3) subgroup. In the language of field operators used for constructing the Lagrangian, this condition is equivalent to the requirement that group transformations be nonlinear. Thus, the zeroth approximation of effective theory must be constructed on the basis of a Lagrangian invariant with respect to transformations of the *nonlinearly realized* $\mathrm{SU}(3)\times\mathrm{SU}(3)$ group, while the transformations corresponding to the SU(3) subgroup must be linear.

Nonlinear representations of the simplest chiral $\mathrm{SU}(2)\times\mathrm{SU}(2)$ group [with a linearly realized isotopic SU(2) subgroup] have been constructed by Weinberg [214] (see, also, the monograph [56]); the general theory of nonlinear representations of an arbitrary compact group G, linear on a given subgroup H, was actually developed in Refs [215–219]. The result is extremely simple and can be formulated as the recipe:

(1) Construct the *covariant derivative* of the Goldstone field ϕ following the rule:

$$\mathcal{D}_\mu\phi = F(\phi)\,\partial_\mu\phi\,.$$

For the given group G and subgroup H, the matrix (the field ϕ carries the group index!) function $F(\phi)$ is determined unambiguously with an accuracy up to the change of field variables that is known not to affect the elements of the S-matrix on the mass surface.

(2) Construct *covariant derivatives* of the other fields (of 'matter') ψ by the rule

$$\mathcal{D}_\mu\psi = V(\phi)\,\partial_\mu\psi\,.$$

Under the conditions indicated above, the matrix function $V(\phi)$ is also unique up to a change of variables.

(3) Use the 'structural blocks' ψ, $\mathcal{D}_\mu\psi$, and $\mathcal{D}_\mu\phi$ for constructing an arbitrary Lagrangian invariant with respect to (linear!) transformations of the H subgroup; in doing so the field ϕ must appear *only* in the blocks indicated.

(4) The Lagrangian constructed in this way will *automatically* be invariant with respect to *all* the transformations of the G group.

We shall illustrate the above assertion by an example (see Ref. [214]). In the case of the chiral $\mathrm{SU}(2)\times\mathrm{SU}(2)$ group it is pions that are the Goldstone bosons. The simplest Lagrangian describing the self-action of the isotriplet of pions $\boldsymbol{\pi}$ takes the form

$$L_{\pi\pi} = \frac{1}{2}\,\mathcal{D}_\mu\boldsymbol{\pi}\,\mathcal{D}^\mu\boldsymbol{\pi}\,, \tag{27}$$

where, given a certain choice of coordinates in the space of pion fields, one has

$$\mathcal{D}_\mu\boldsymbol{\pi} = \frac{\partial_\mu\boldsymbol{\pi}}{1+\lambda^2\boldsymbol{\pi}^2}\,. \tag{28}$$

Another choice of coordinates, i.e. the nondegenerate substitution

$$\boldsymbol{\pi}' = \boldsymbol{\pi}\Phi(\boldsymbol{\pi}^2)\,, \qquad \Phi(0)=1\,,$$

would result in an alteration in the explicit form of the covariant derivative [i.e. the right-hand part of relation (28)]; the S-matrix would remain intact. The arbitrary constant λ present in (28) can be determined from the normalization of the axial current (PCAC). This yields $\lambda^{-1} = 2f_\pi$ ($f_\pi = 92$ MeV is the weak-decay constant of the pion).

Lagrangian (27) describes processes involving an arbitrary (even) number of massless pions. Nor is it difficult to construct a more general form by adding to it terms of the type

$$C_1\big(\mathcal{D}_\mu\boldsymbol{\pi}\cdot\mathcal{D}^\mu\boldsymbol{\pi}\big)\big(\mathcal{D}_\nu\boldsymbol{\pi}\cdot\mathcal{D}^\nu\boldsymbol{\pi}\big) + C_2\big(\mathcal{D}_\mu\boldsymbol{\pi}\cdot\mathcal{D}_\nu\boldsymbol{\pi}\big)\big(\mathcal{D}^\mu\boldsymbol{\pi}\cdot\mathcal{D}^\nu\boldsymbol{\pi}\big) + \ldots \tag{29}$$

Comparing expressions (27) and (29) with (24) we see that the entire scheme presented in the previous section can be applied practically without changes to the case under consideration: an effective theory of *soft* pion scattering processes can be constructed as an expansion in powers of the momentum. The lowest approximation is fully determined by a single constant f_π, the next one — by two (C_1, C_2), etc. The number of constants to be determined from the experimental data turns out to be finite in each order and is quite reasonable from the point of view of experimental facilities (at least, in the lowest orders).

Taking into account the pion mass presents no problem, if it is considered as a second small parameter of the same order of magnitude as the momentum. The entire scheme for calculating the total order of the contribution given by a given graph remains unchanged; however, the number of constants to be fixed in the course of renormalization increases, since inclusion of the mass as an independent small parameter corresponds to the expansion of the constants f_π, C_1, C_2 into series in powers of m_π^2.

We hope that the above discussion will be sufficient for the reader to acquire a clear idea of the principles underlying the construction of chiral perturbation theory; a detailed presentation would have required a separate review. The case of the $\mathrm{SU}(3)\times\mathrm{SU}(3)$ group differs from the example dealt with above only in that the place of the pion triplet is taken by the octet of the lightest pseudoscalar mesons, while the covariant derivatives are constructed in accordance with the structure of the SU(3) group. Moreover, the choice of coordinates in the space of Goldstone fields (applied in Refs [210, 211]), which has already become traditional, differs from the one adopted above. We follow the Weinberg parametrization [214], which is more convenient for achieving initial acquaintance with the issue.

7.3 Pion scattering lengths in SCPT and GCPT

It only remains for us to clarify how in CPT there appear quark masses instead of the masses squared of Goldstone

bosons. At a purely qualitative level the answer is simple: if the quark masses were equal to zero, then the chiral symmetry of the QCD Lagrangian would be *exact*; its spontaneous breaking would result in the appearance of *massless* Goldstone bosons. This means that the masses of the latter should be proportional to the quark masses. The relevant relations were obtained in Refs [220 – 222]; their detailed analysis and further development are presented in Refs [211, 223 – 225]. Taking into account these relations in the CPT formulae serves as the last link in the logical chain relating the characteristics of low-energy scattering processes of Goldstone particles directly with the QCD parameters — with the masses of light quarks and with quantities defining the condensates.

The CPT methods based on the *standard* scheme of spontaneous breaking of the chiral symmetry, which assumes the production of a significant (of the order of 1 GeV) quark condensate, were applied for computing many characteristics of low-energy processes (see reviews [226, 227] and conference proceedings [228, 229]). A good agreement between the results of calculations and experimental data is observed in practically all cases. Precisely this circumstance allows one to think that the above-described picture of low-energy interactions of Goldstone particles follows directly from the main principles of QCD. Moreover, CPT formulae permit the masses of light quarks to be determined from the experimental data on hadron processes — this is precisely how the values presented in the compilation of Ref. [173] were obtained.

This section could have been concluded with the optimistic statement that the fundamental QCD parameters have been determined and that new experiments are required for enhancing the accuracy of the magnitudes obtained, if it were not for the small cloud noticed in the sky of theory by the authors of Refs [230 – 232] (see, also, the report by Stern in Ref. [228]). The point is that the assumed smallness of the corrections to the mass formulae made use of in standard CPT (SCPT) follows neither from theoretical arguments nor from experimental data. If this assumption is wrong, existing ideas of the measures of condensates and quark masses may undergo very significant *qualitative* changes, not to mention quantitative ones. To overcome this obstacle, the authors of the works indicated developed a generalized CPT (GCPT) totally equivalent to SCPT summed over *all* orders, but differing from it when only several of the lowest orders are taken into account. The form of the effective Lagrangian naturally remains intact (it is unambiguously fixed by symmetry requirements); the expansions of the free parameters (masses and coupling constants) in series in powers of the quark masses do change form.

Calculation of the $\pi\pi$-scattering length a_0^0 in the one-loop GCPT approximation (under the condition that the condensate is a *very small* quantity) yielded the value 0.27; the two-loop correction turned out to be negligible ($\sim 0.5\%$, see Ref. [232]), which points to a very rapid convergence. The respective SCPT results (the condensate is large) are the following: one-loop approximation — $a_0^0 = 0.20$ [210], two-loop — $a_0^0 = 0.215$ [233] (the correction $\sim 8\%$, the convergence is slower). Comparison with the data of Ref. [126] ($a_0^0 = 0.26 \pm 0.05$) is clearly does not favor SCPT. However, one must not hurry to draw conclusions. In the report by Stern [234], it is especially underlined that the experimental data used in both (SCPT and GCPT) versions for determining the free parameters are far from being sufficiently reliable to construct conclusions relevant to the mechanism of spontaneous breaking of QCD symmetry on their basis. Precisely this circumstance explains the urgent necessity for obtaining new data on the low-energy interaction of the octet of Goldstone bosons. The analysis of theoretical uncertainties in the interpretation of data on the K_{e4} decay, performed in Ref. [235], shows that this process is extremely promising from the indicated point of view, if a reduction of the resulting (statistical plus systematic) error in the data on the phase difference $\delta_0^0 - \delta_1^1$ is achieved. It was mentioned above that the relevant data are to be obtained in the nearest future, which will reveal whether it will be possible to overcome the difficulties related to the 'acceptance problem' dealt with in the next section.

8. The problem of ill-posed tasks in data analysis

When no possibility exists for direct measurement of the characteristics of $\pi\pi$ scattering, indirect methods have to be applied. In such cases the result desired is achieved by very complicated procedures for processing the experimental data on a certain reaction (for instance, $\pi N \to \pi\pi N$) that can be measured directly and that carries (at least, in principle) information on the $\pi\pi$-scattering amplitude. The term 'processing' must be understood as the complete set of computational operations necessary for extracting the information sought (characteristics of $\pi\pi$ scattering) from the set of figures ('counts') obtained with the aid of the experimental setup.

The processing procedure is traditionally divided into two stages, the essence of which will be schematically explained making use of the example of the reaction $\pi N \to \pi\pi N$.

The first stage is implemented by the group of experimenters and consists in separating inelastic events with two pions and a nucleon in the final state from purely elastic and other inelastic (such as $\pi N\gamma$) events, which all together are termed the background. This stage also includes correction of the data for the acceptance and the finite resolution of the detector. The result is a set of numbers (with errors indicated) characterizing the distribution of events of the $\pi N \to \pi\pi N$ reaction over the phase space (or part of it). Work at this stage requires detailed knowledge of the specific features of the experimental setup and of the experimental conditions.

The second stage, unlike the preceding one, may be carried out by any team of specialists in data handling: knowledge of the setup is no longer needed. At this stage some theoretical scheme is made use of that permits the dependence of the $\pi N \to \pi\pi N$ reaction cross sections on the parameters of elastic $\pi\pi$ scattering to be described; the values of the latter are determined by fitting the data obtained at the first stage.

As a rule, the volume of 'primary' data obtained with modern devices is so large that the problem of statistical errors becomes irrelevant and gives way to the problem of systematic errors [236]. Therefore, the arsenal of methods applied at the first stage is quite impressive; at present it forms an independent branch of applied mathematics. One of the very significant achievements of this line of study consists in apprehension of the role of so-called ill-posed problems and in the development of appropriate methods for resolving them.

The second stage, unlike the first, requires a significantly smaller volume of numerical computations, for which, as a

rule, standard software is used. At the same time, work at this stage requires a more profound knowledge of the purely theoretical issues needed for choosing an adequate model and for analysis of the fitting results. Precisely this circumstance apparently explains the underestimation, often encountered in works devoted to the second stage, of the actual restriction essentially imposed on the possibilities provided by one or another mathematical method for solution of a given physical problem. Such underestimation is dangerous in that the error in the results indicated in the vast majority of works is only related to the error in the initial (for the second stage) data on the reaction $\pi N \to \pi\pi N$, presented by the authors of the first stage of data processing, and is in no way made to reflect the methods applied directly at the second stage. This, in turn, gives rise to hopes that for obtaining the characteristics of $\pi\pi$ scattering with a given precision it is only necessary to enhance the statistic of experimental data. It is clear that the argumentation in favor of such hopes is insufficient if one recalls the main provisions of the theory of ill-posed problems.

The concept of an ill-posed problem was formulated by J Hadamard at the beginning of the twentieth century; for a long time it was considered that such problems could not have anything to do with physics and techniques. However, the importance of studying problems of this type precisely from the point of view of applications was fully recognized in the 40s, and intensive development of methods for resolving them started. At present, the relevant bibliography includes thousands of works and tens of review articles and monographs. For a first acquaintance we can recommend the books [237 – 239] as well as the review articles [236] and [240] (the first deals with the correction of scattering data at high energies; the second with the principal points of the corresponding method). We shall restrict our discussion here to an exposition 'for pedestrians', quite sufficient for comprehension of the physical essence of the problem.

So, what does the term 'ill-posed problem' actually mean? To answer this question we shall examine a simple example — the problem of constructing a function $f(x)$ from the measured coefficients a_0, a_i, b_i $(i = 1, 2, \ldots)$ of its expansion into the Fourier series

$$f(x) = \frac{1}{2}\, a_0 + \sum_{k=1}^{\infty} (a_k \cos kx + b_k \sin kx) \tag{30}$$

on the entire interval $[-\pi, \pi]$. We shall denote the values of coefficients a_i and b_i obtained in the experiment by α_i and β_i, respectively. Thus, the final experimental result is obtained by summing up the following Fourier series:

$$f_{\exp}(x) = \frac{1}{2}\, \alpha_0 + \sum_{k=1}^{\infty} (\alpha_k \cos kx + \beta_k \sin kx)\,. \tag{31}$$

Now we shall try to give an answer to the question: what is the error in this result?

Suppose the errors in the values α and β can be made negligibly small (the errors are purely statistical); moreover, let the measurement precision increase with the number of the coefficient according to the following rule:

$$a_0 - \alpha_0 = 0\,, \qquad a_k - \alpha_k = b_k - \beta_k = N\,\frac{\epsilon}{k}\,, \tag{32}$$

where $N = \sqrt{3}/\pi$ is a coefficient introduced for reasons of convenience, and ϵ is an arbitrarily small quantity. It is easy to verify that under these conditions

$$\frac{(a_0 - \alpha_0)^2}{2} + \sum_{k=1}^{\infty} \left[(a_k - \alpha_k)^2 + (b_k - \beta_k)^2\right] = \epsilon^2\,, \tag{33}$$

i.e. the errors in setting the coefficients are small in the sense of the L_2-space metric.

Now, comparing the exact value of $f(x)$ with the value $f_{\exp}(x)$ we see that the difference is given by the Fourier series

$$\Delta f(x) = \frac{a_0 - \alpha_0}{2} + \sum_{k=1}^{\infty} \left[(a_k - \alpha_k)\cos kx + (b_k - \beta_k)\sin kx\right]\,, \tag{34}$$

the sum of which is arbitrarily large; when $x = 0$, this series diverges and one has

$$\Delta f(0) \sim \sum_{k=1}^{\infty} \frac{1}{k} = \infty\,.$$

Thus, we see that enhancement of the precision of the experimental data (the Fourier coefficients) cannot result in an enhancement of the accuracy of the final result. In other words, the problem considered is characterized by an extremely strong dependence of the answer on the initial data: small variations in the latter are capable of causing very large variations in the result. Precisely such problems are termed ill-posed.

We note that the above conclusion that the problem of summing a Fourier series is ill-posed holds true only to the extent to which the accuracy of the result is understood in the sense of the absolute value of the deviation, i.e. estimation is based on the metric of the C space; the meaning of this comment will be clear from the further exposition.

The example presented may seem somewhat artificial, since only a finite number of Fourier coefficients are measured in an experiment. In this case the error in the sum is linearly related to the error in the initial data, and the problem seems not to exist. The mistake in this argumentation becomes clear if one takes into account that an extremely precise measurement of only *several* Fourier coefficients has sense only when it is known beforehand that exactly these coefficients determine the structure of the function sought, while the remaining coefficients are exactly equal to zero. Such additional information on the result sought in the theory of ill-posed problems is termed a priori information; taking it properly into account may indeed make the formulation of the problem correct. But in the absence of a priori information on the function sought, a simple enhancement of the measurement statistic is insufficient for obtaining a precise answer; it is also necessary to increase the number of Fourier coefficients measured. Here, the initial problem being ill-posed is manifested in the solution 'coming loose' as the number of coefficients taken into account increases: there appear spikes and bends that clearly have nothing to do with the true (physically reasonable) answer. Numerous examples of this sort can be found in the books [237, 238]. Historically, precisely the properties of instability together with the purely practical necessity of creating adequate computational schemes triggered the development of the philosophy and theory of the solution of ill-posed problems.

Upon becoming acquainted with the meaning of the term 'ill-posed problem', it is natural to ask the question: is ill-

posedness only related to the choice of one or another method for resolving a problem or does it also have roots of a purely physical nature? A general answer cannot be given, since the form of the question put is rather of a philosophical than a physical character. It is known, however, that the problem of ill-posedness always arises when an attempt is made to extract information from an experiment in which a sufficiently large signal-to-noise ratio is not provided for. In other words, the ill-posedness of a physical problem is closely related to its informational underdetermination: it is impossible to obtain an unambiguous answer without making use of additional selection criteria (i.e. a priori information). It is not difficult to understand that the choice of some or other criteria is nothing but the choice of a model for the phenomenon studied; the danger is that it may turn out to be the principal factor in the interpretation of the results of measurements. Thus, in the example examined above we could restrict ourselves to considering only a narrow class of solutions not containing harmonics with $k > N$, motivating this choice by the fact that higher harmonics were not being investigated in the experiment. Utilization of this a priori information, as already noted, does make the problem mathematically correct. However, it is not difficult to imagine a situation where the result of the subsequent experiment, in which all the harmonics with $k \leqslant 2N$ are measured, will turn out to be totally different from the result obtained in the preceding experiment: *bringing in a nonmotivated model of the process is the cause of erroneous interpretation of experimental data*.

The example of the Fourier series is convenient in that here it is possible to indicate a very broad class of physical models for which the problem of summing is mathematically correct. Indeed, with the aid of the Parseval theorem one can readily verify (see Ref. [237]) that estimation of the deviation of solutions in the L_2 metric (and not the C metric, like above)

$$\Delta f = \left\{ \int_{-\pi}^{\pi} \left| f(x) - f_{\exp}(x) \right|^2 \mathrm{d}x \right\}^{1/2}$$

renders the formulation of the problem mathematically correct, given the same method for estimating the deviation of the data (33). On the other hand, the choice of the metric L_2 may be dictated, for instance, by our not being interested in the form of the 'amplitude' $f(x)$ but in the energy related to it quadratically.

In many cases, when physical arguments alone are insufficient to provide for the correct formulation of a problem, one may take advantage of special regularization methods leading to a unique solution. However, estimation of the respective systematic errors then becomes extremely difficult. In such cases it seems most natural to apply methods of statistical regularization, since here the introduced dependence (which in any case cannot be avoided) upon the model is in a certain sense minimal [236, 239, 240].

We hope that the above is sufficient for the reader to realize fully the obstacles arising in the course of solution of ill-posed problems related to the interpretation of the results of physical experiments. Now we can come back to the immediate topic of our review and show that the theory of ill-posed problems is directly related to the problem of processing data with the purpose of extracting information on the pion – pion interaction. This assertion is not new (see, for instance, Ref. [236]) as soon as the issue concerns primary data processing corresponding to the first stage in our classification: the 'acceptance problem' has for a long time given rise to numerous worries for experimenters. It has drawn great attention in the experimental works of the past decade already quoted above and devoted to investigation of $\pi N \to \pi\pi N$ reactions in the vicinity of the threshold. The difficulty here consists in the fact that one studies an inelastic process, the amplitude of which exhibits a nontrivial spin dependence (see Section 6). In such a situation there is no sense in a direct comparison of experimental distributions and calculations based on the statistical hypothesis, and a model-independent determination of the acceptance is impossible. A careful estimation of systematic distortions arising here (undertaken in Ref. [107]) revealed that the latter can introduce corrections $\sim 25\%$ to the total cross sections, and $\sim 15\%$ per bin of the one-dimensional histograms of distributions over t, while the two-dimensional distributions were reconstructed with even less accuracy. These figures clearly show that taking into account systematic errors may drastically alter our ideas of the precision of the experimental data used in the works of the second stage for obtaining information on the parameters of pion – pion interactions: the optimism arising from the values of statistical errors has no firm foundation.

Most experimenters have become aware of the difficulties in the estimation of systematic errors arising at the first stage of data processing; however, it must be added that these difficulties are not always understood to be closely related to the property of ill-posedness peculiar to deconvolution problems [236].

Precisely the same problems arise at the second stage. The determination of the parameters of the $\pi\pi$-scattering amplitude from data on the $\pi N \to \pi\pi N$ reaction represents nothing but solution of the inverse problem with approximate initial conditions (and with an approximately known core). As a rule, problems of this type are ill-posed [240]. This possibility has become the subject of discussions only very recently — after the reports [107] and [241] presented at the MENU'95 symposium. Apparently, the reason is that the need for very precise S-wave scattering lengths has sharply risen in connection with the publication of works on the generalized CPT. In the preceding sections we have already mentioned that reduction of experimental errors down to the level of 10 – 15% would permit a final choice in favor of one of the two scenarios of chiral symmetry breaking to be made. The importance of this choice is evident, therefore a reliable model-independent estimation of errors would be quite opportune. The problem, however, is that the very possibility of achieving such an estimation depends on the ill-posedness properties of the problem.

In a problem being resolved at the second stage it is not difficult to point immediately to at least one source of ill-posedness — the method for separating the 'disturbing' $\pi N \to \pi\pi N$ reaction mechanisms (we shall further call them background mechanisms) from the contribution of the four-pion vertex on the mass surface. Within the approach based on the Chew – Low formula, this is done with the aid of a filter — an extrapolation function partly suppressing background contributions in the experimentally accessible region of negative t and extrapolated to the pion pole $t = \mu^2$. Here, the extrapolation procedure is the source of ill-posedness: *in the case when the extrapolation law is only known approximately, it is extremely unstable with respect to small perturbations of both the law* (*extrapolation function*) *itself and the initial data* (*errors in the distributions and interval lengths*). In practical calculations this instability is manifested in the very

strong dependence of solutions on both the form of the experimental data used (the extrapolation interval in t, errors, the type of distribution, the incident pion momentum, etc.) and the choice of the extrapolation formula (linear, quadratic, etc.).

On the other hand, in the approach proposed in Ref. [81] the background contributions are not suppressed, but they are determined (together with the clearly identified contribution of the 4π-vertex on the mass surface) from the same experimental data on the $\pi N \to \pi\pi N$ reaction in the physical region. Since the exact form of the background contributions cannot be indicated, their entire set is approximated by a function the shape of which is only restricted by the most general symmetry laws and the requirement of smoothness; the latter is based on the analysis of physical causes capable of giving rise to singularities close to the boundaries of the phase space volume. Thus, this approach is just the solution of the inverse problem with an approximately given core. Problems of this type are also ill-posed: small perturbations of the core (i.e. of the shape of the function approximating the background contributions) are capable of leading to noncontrollable changes in the solution. In fitting procedures this leads to the appearance of a large number of solutions that are practically indistinguishable within the chosen set of data and the strong dependence of the answers on the choice of one or another method for approximating the background. Numerous examples of such a type are presented in Refs [81, 242].

A simple conclusion follows from the above: *estimation of the errors in $\pi\pi$-scattering lengths based only on the statistical errors in the experimental data on the $\pi N \to \pi\pi N$ reaction is insufficiently reliable*. It is not difficult to understand that the same conclusion refer equally to data obtained from the K_{e4} decay, at least to the results of the first stage in their processing.

Does this conclusion mean that experimental investigation of inelastic low-energy processes such as $\pi N \to \pi\pi N$ is of no interest from the point of view of comparison of the results with calculations based on CPT? Of course not. Recently, both theorists and experimenters directly involved in the problem are more and more inclined to think that further experiments are not only desirable, but actually necessary: comparison of the results with CPT formulae for the inelastic amplitude (they have been partly obtained in Refs [61, 63] for the process $\pi N \to \pi\pi N$) will yield valuable (model-independent) information on the coupling constants of resonances with pions and nucleons. When such comparison is performed, the problem of ill-posedness of tasks at the second stage is partly (and possibly completely) removed, since the core of the operator is defined with the aid of a relatively small number of parameters; on the other hand, the accuracy of parametrization is controlled by the structure itself of the CPT formulae. Naturally, all the difficulties related to deconvolution problems (taking into account corrections for the acceptance and for the finite resolution of the detector) remain, but these are problems of the first stage and their detailed discussion is beyond the scope of the present review.

To conclude this section we shall present a concrete example that illustrates the practical importance of the ill-posedness problem quite clearly and permits the reader to get rid (at least, in part) of the feeling that the material presented above is of a somewhat abstract character. The example is taken from a review report [243] devoted to an analysis of the CPT results relevant to pion – pion and pion – nucleon interactions; it is interesting, also, in that it provides an idea of the degree of reliability in the interpretation of existing data on the K_{e4} decay.

At present, the most reliable value of the S-wave pion – pion scattering length with isospin $I = 0$ is considered to be the value based on an analysis presented in Ref.[48] of the data on the K_{e4} decay:

$$a_0^0 = 0.28 \pm 0.05 \tag{35}$$

(often the 'corrected' value $a_0^0 = 0.26 \pm 0.05$ taken from the compilation in Ref. [126] is also quoted). The difference of the central value from the quantity 0.21 obtained from two-loop calculations within the standard CPT [244] and its closeness to the quantity 0.27 found with the aid of the generalized CPT (in the same order) [232] is presently a subject of heated discussions. The necessity of obtaining data with a smaller statistical error [the one given in (35)] is due to the fact that they will make possible the final choice in favor of one of the two scenarios of chiral symmetry breaking. In this connection, the issue naturally arises of the *systematic* error in the data [48]. Are these data actually inconsistent with the standard CPT? To obtain an answer to this question, the author of Ref. [243] made use of the experimental phase differences $\delta_0^0 - \delta_1^1$ and performed fits by two different methods.

In the first version two parameters were fitted: the scattering length a_0^0 and the parameter b that takes into account the deviation from linearity. Besides, the following approximate relation (also applied in Ref. [48]) is taken into account:

$$\sin 2(\delta_0^0 - \delta_1^1) = 2\sqrt{1 - \frac{4m_\pi^2}{s}}\,(a_0^0 - q^2 b)\,. \tag{36}$$

Considering the scattering length a_0^0 and the parameter b to be independent quantities, the author obtained the central value $a_0^0 = 0.31$. On the other hand, taking into account the phenomenological relationship between these parameters (see Ref. [98]) yielded the value $a_0^0 = 0.28$ already obtained in the original work [48]. Thus, the results of the first fit fully confirmed the 'canonical' central value of 0.28.

In the second method, the expression used for the amplitude is the one obtained in the two-loop approximation of standard CPT and depending on four parameters $\bar{l}_k$ $(k = 1, \ldots, 4)$ uniquely related to the scattering lengths and the inclination parameters. Considering, for definiteness, $\bar{l}_2$ to be free and setting the other three parameters equal to values consistent with the hypothesis of resonance saturation, the fit performed by the author yielded

$$\bar{l}_2 = 6.4 \pm 1.6\,, \qquad a_0^0 = 0.220 \pm 0.012\,,$$

here the χ^2 value turned out to be practically identical to the value obtained by the first method!

Noting that the theoretical status of CPT is at least not lower than the status of the approximate relationship (36), the author concludes that no ground exists for disagreement: *the central value* 0.28 *of the scattering length a_0^0 is based on the data of Ref.* [48] *to a lesser extent, than on the arbitrarily adopted relationship* (36). A possible physical reason for the dispersion of the central values of the scattering length a_0^0 is indicated in the report by Leutwyler [245]: the scattering lengths are small, and their influence is dominant only in an insignificant vicinity of the threshold; hence, in performing data proces-

sing one must take into account the higher terms of the energy expansion of the partial wave. Without disputing this thesis, we only wish to stress two points:

(1) From the example examined above it follows that in solving the direct problem (comparison of experimental data with CPT formulae for the phase difference) it is not necessary to take into account higher terms of the expansion, since a reasonable agreement is already achieved without this accounting.

(2) Taking into consideration higher terms in solving the *inverse* problem (i.e. in fitting the phase difference by several parameters: scattering lengths and inclination parameters) will only result in a greater dispersion of the central values and in significant correlations between the parameters. The approximate relation (36) was applied in Ref. [48] precisely in order to avoid correlations and to obtain an acceptable value for the error. Without making use of such relations (which introduce an uncontrollable model dependence), the solution of the inverse problem will always be unstable with respect to the introduction of additional parameters that correspond to taking into account higher terms of the partial-wave expansion. This feature peculiar to inverse problems with approximately known cores is simply a typical manifestation of ill-posedness.

9. Conclusions

During the two decades that have passed since publication of the previous review [42], investigation of the pion – pion interaction has undergone essential progress, both theoretical and experimental. We shall below present the most essential results obtained and describe the prospects of studies that have already been initiated.

(1) An important theoretical achievement of the past two decades was the creation of the concept of effective theory and the construction, on this basis, of chiral perturbation theory (CPT) which provides a firm foundation for calculating the characteristics of low-energy processes involving pions. The model-independence of the results obtained in this way is due to the CPT structure itself, the construction of which is totally based on the principle of spontaneous breaking of chiral symmetry peculiar to the QCD Lagrangian in the limit of zero quark masses. The possibility of various scenarios for spontaneous breaking of chiral symmetry is taken into account in the structure of the series constructed according to the scheme of generalized CPT; at the same time, the scenario corresponding to large values of the *lowest* condensate leads to a more economic scheme of the standard CPT. Equivalent when *all* the orders are taken into account, these two schemes differ in the rate with which the series converge and, consequently, in the results of the *principal* orders. This permits (at least, in principle) the experimental data on the $\pi\pi$ scattering to be used for making judgements concerning the type of symmetry-breaking scenario. Precisely this circumstance makes the problem of obtaining very precise values for the $\pi\pi$-scattering lengths extremely interesting and timely.

(2) A significant event of recent years is the drastic new increase in interest in the old problem (considered resolved at the beginning of the 80s) of the existence of light broad scalar resonances. These states, which are necessary for many theoretical constructions (in particular, related to manifestations of spontaneously-broken chiral symmetry at the level of spectra), have still not been unambiguously identified from experimental data. It cannot be ruled out that the problem does not consist in the amount and quality of existing data, but in our ability to estimate errors and interpret (in the language of field theory) the results of analysis of *large databases*: only such large volumes of data can ensure that the conclusions are sufficiently reliable and clear.

(3) Experimentally, very substantial progress has been achieved in approaching the threshold in the measurement of the total cross sections and angular distributions in $\pi N \to \pi\pi N$ reactions, including the $\pi^0\pi^0 N$ channel. Owing to the unique experimental technique, the characteristics indicated have been measured at energies that exceed the threshold values by only 5 – 6 MeV. This facilitates solution of the problem of extrapolating cross sections to the threshold, which is necessary for analyzing data within the framework of methods related to the concept of soft pions.

(4) The progress in the phenomenology sector was mainly due to the processing of new data within the framework of the Chew – Low method and applying the Roy equations, as well as to the analysis of the results of polarization experiments. These studies permitted more accurate phase curves from the threshold up to values of the dipion mass equal to 1.2 GeV to be obtained and, also, the intervals of possible values of scattering lengths to be reduced.

(5) Soon after publication of the present article, the first results should appear from a new experiment for investigation of the K_{e4} decay, which is under way at Brookhaven. This experiment gives hope that the problem of choosing the spontaneous chiral symmetry-breaking scenario will be resolved and encourages experimenters that low-energy calibration of results obtained by the extrapolation method will become possible. The plans to be implemented in the new experiment include accumulation of a gigantic — for such a rare decay mode — statistic of 3×10^5 events, which will allow a value for a_0^0 to be obtained with a 5% accuracy.

(6) One more experiment, which should yield a result in the next few years, is related to the investigation of the exotic unstable hydrogen-like $(\pi^+\pi^-)$ atom — pionium. Theory permits the branching ratio of pionium decay probabilities via channels $2\pi^0$ and 2γ to be related to the difference between the squares of $\pi\pi$-scattering lengths $a_0^0 - a_0^2$. Therefore, measurement of the pionium lifetime with a 10% accuracy will make it possible to obtain the value of $a_0^0 - a_0^2$ with an accuracy of 5%. At present, two different versions have been proposed for measuring the pionium lifetime and partly realized in experiments. In the first (more promising) version, the natural pionium decay probability is estimated by its comparison with the measurable and calculable probability of the alternative decay process of the $(\pi^+\pi^-)$ atom in the target. In 1994, at Serpukhov $(\pi^+\pi^-)$ pairs from the disintegration of pionium were observed; at present, a more accurate experiment [in which 20,000 $(\pi^+\pi^-)$ pairs are expected to be registered] is being prepared at CERN. If the experiment is successful, it will be possible to count on obtaining a very precise value for the quantity $a_0^0 - a_0^2$. In the second version, the pionium lifetime was conceived to be estimated by measuring the yield of γ-quantum pairs from the pionium decay. The pionium atoms are to be identified by tagging them via a certain reaction. At present, the idea of tagging has already been tested experimentally, but pionium has not been revealed. From an estimate of its production cross section ($\sim$ 1 pb) it follows that, for such an experiment to meet with success, the luminosity of the accelerator must be increased by three orders of magnitude and the background

must be reduced by a factor of 100, which is practically impossible without any new ideas. Thus, it seems that one can only rely on the first method being successful.

In conclusion, the authors wish to express confidence that in the next few years many of the difficulties mentioned will be overcome and the joint efforts of experimenters and theorists will lead to even more significant progress in the understanding of the physics of pion – pion interactions.

We express our profound gratitude to V V Anisovich who read the review and made a series of valuable comments, to M Zh Shmatikov, D Počanić, G Smith for fruitful discussions, and also to V N Tikhonov for help in the work on the review. One of us (V V Vereshchagin) expresses his sincere acknowledgment to T Ishida, M D Scadron, J Schechter and N Törnqvist for information on their work and to J Gasser for discussions of the problems of effective theories and for friendly support. The work of V V Vereshchagin was supported by the grant GRACENAS-6-19-97.

References

1. Balakin V E, Skrinskiĭ A N *Lineĭnye Vstrechnye Puchki — Perspektivy Razvitiya* (Linear Colliding Beams — Prospects of Development) (Moscow: Izd. MIFI, 1984)
2. Chew G, Low F *Phys. Rev.* **113** 1640 (1959)
3. Goebel C *Phys. Rev. Lett.* **1** 337 (1958)
4. Gribov V N *Nucl. Phys.* **5** 653 (1958)
5. Ansel'm A A, Gribov V N *Zh. Eksp. Teor. Fiz.* **36** 1890 (1959) [*Sov. Phys. JETP* **9** 1345 (1959)]; **37** 501 (1959) [*Sov. Phys. JETP* **10** 354 (1960)]
6. Gribov V N *Zh. Eksp. Teor. Fiz.* **41** 1221 (1961) [*Sov. Phys. JETP* **14** 871 (1962)]
7. Anisovich V V, Ansel'm A A, Gribov V N *Zh. Eksp. Teor. Fiz.* **42** 224 (1962) [*Sov. Phys. JETP* **15** 132 (1962)]
8. Anisovich V V, Ansel'm A A *Usp. Fiz. Nauk* **88** 287 (1966) [*Sov. Phys. Usp.* **9** 117 (1966)]
9. Anisovich V V, Dakhno L G *Yad. Fiz.* **6** 845 (1967)
10. Anisovich V V, Volkovitskiĭ P É *Yad. Fiz.* **14** 1055 (1971)
11. Aref'ev A V et al. *Yad. Fiz.* **5** 1060 (1967)
12. Aref'ev A V et al. *Yad. Fiz.* **10** 797 (1969)
13. Weinberg S *Phys. Rev. Lett.* **17** 616 (1966)
14. Feynman R, Gell-Mann M *Phys. Rev.* **109** 193 (1958)
15. Weinberg S *Phys. Rev. Lett.* **18** 188 (1967)
16. Schwinger J *Phys. Lett. B* **24** 473 (1967)
17. Chang P, Gursey F *Phys. Rev.* **164** 1752 (1967)
18. Olsson M G, Turner L *Phys. Rev. Lett.* **20** 1127 (1968)
19. Pais A, Treiman S B *Phys. Rev.* **168** 1858 (1968)
20. Golubnichiĭ P I et al. *At. Energ.* **22** 168 (1967)
21. Auslander V et al. *Phys. Lett. B* **25** 433 (1967)
22. Auslander V L et al. *Yad. Fiz.* **9** 114 (1969)
23. Augystin J I et al. *Nuovo Cimento Lett.* **2** 214 (1969)
24. Balakin V E et al. *Phys. Lett. B* **41** 205 (1972)
25. Jackson J D *Nuovo Cimento* **34** 1644 (1964)
26. Petersen J L *Phys. Rev. C* **2** 1271 (1971)
27. Boreskov K G et al. *Yad. Fiz.* **15** 361, 557 (1972)
28. Boreskov K G, Kaĭdalov A B, Ponomarev L A *Yad. Fiz.* **17** 1285 (1972)
29. Boreskov K G, Kaĭdalov A B, Ponomarev L A, Preprint ITEP-16 (Moscow: ITEP, 1974)
30. Ponomarev L A *Fiz. Elem. Chastits At. Yadra* **7** 186 (1976) [*Sov. J. Part. Nucl.* **7** 70 (1976)]
31. Veneziano G *Nuovo Cimento A* **57** 190 (1968)
32. Schwarz J H *Phys. Rep.* **8** 269 (1973)
33. Veneziano G *Phys. Rep.* **9** 199 (1974)
34. Fukugita M, Igi K *Phys. Rep.* **31** 237 (1977)
35. Frampton P H *Dual Resonance Models and Superstrings* (Singapore: World Scientific, 1986)
36. Jackson J D *Rev. Mod. Phys.* **37** 484 (1965)
37. Leksin G A *Usp. Fiz. Nauk* **102** 387 (1970) [*Sov. Phys. Usp.* **13** 704 (1971)]
38. Basdevant J et al. *Nuovo Cimento A* **7** 363 (1972)
39. Petersen J L, Preprint CERN 7704 (1977)
40. Shirkov D V, Serebryakov V V, Meshcheryakov V A *Dispersionnye Teorii Sil'nykh Vzaimodeĭstviĭ pri Nizkikh Energiyakh* (Dispersion Theories of Strong Interactions at Low Energy) (Moscow: Nauka, 1967) [Translated into English (Amsterdam: North-Holland, 1969)]
41. Martin B R, Morgan D, Shaw G *Pion – Pion Interaction in Particle Physics* (New York: Academic Press, 1976)
42. Mukhin K N, Patarakin O O *Usp. Fiz. Nauk* **133** 377 (1981) [*Sov. Phys. Usp.* **24** 161 (1981)]
43. Bel'kov A A, Bunyatov S A *Fiz. Elem. Chastits At. Yadra* **13** 5 (1982) [*Sov. J. Part. Nucl.* **13** 1 (1982)]
44. Kartamyshev A A et al. *Pis'ma Zh. Eksp. Teor. Fiz.* **23** 478 (1976) [*JETP Lett.* **23** 432 (1976)]
45. Mukhin K N et al. *Pis'ma Zh. Eksp. Teor. Fiz.* **32** 616 (1980) [*JETP Lett.* **32** 601 (1980)]
46. Batusov Yu A et al. *Zh. Eksp. Teor. Fiz.* **45** 913 (1963) [*Sov. Phys. JETP* **18** 675 (1964)]
47. Bel'kov A A, Bunyatov S A, Mukhin K N et al. *Pis'ma Zh. Eksp. Teor. Fiz.* **29** 652 (1979) [*JETP Lett.* **29** 597 (1979)]
48. Rosselet L et al. *Phys. Rev. D* **15** 574 (1977)
49. Berglund A et al. *Nucl. Phys. B* **137** 276 (1978)
50. Dulude R S et al. *Phys. Lett. B* **79** 329, 335 (1978)
51. Martin B R, Morgan D, in *Proc. European Symp. on Antinucleon – Nucleon Annihilations* (Strasbourg, France) RL-78-057 (1978)
52. Anisovich V V *Usp. Fiz. Nauk* **168** 481 (1998) [*Phys. Usp.* **41** 419 (1998)]
53. Volkov M K, Pervushin V N *Sushchestvenno Nelineĭnye Kvantovye Teorii, Dinamicheskie Simmetrii i Fizika Pionov* (Essentially Non-Linear Quantum Theories, Dynamic Symmetries and Pion Physics (Moscow: Atomizdat, 1978)
54. Vaĭnshteĭn A N, Zakharov V I *Usp. Fiz. Nauk* **100** 225 (1970) [*Sov. Phys. Usp.* **13** 181 (1970)]
55. Volkov M K, Pervushin V N *Usp. Fiz. Nauk* **120** 363 (1976) [*Sov. Phys. Usp.* **19** 894 (1976)]
56. Weinberg S *The Quantum Theory of Fields* Vols 1, 2 (Cambridge: Cambridge University Press, 1995)
57. David M et al. *Phys. Rev. D* **16** 2027 (1977)
58. Grivaz J F et al. *Phys. Lett. B* **61** 400 (1976)
59. Borreani G et al. *Nucl. Phys. B* **147** 28 (1979)
60. Donnachie A et al. *Phys. Lett.* **22** 332 (1966)
61. Bernard V, Kaiser N, Meissner Ulf-G *Int. J. Mod. Phys. E* **4** 193 (1995)
62. Bernard V, Kaiser N, Meissner Ulf-G *Nucl. Phys. B* **457** 147 (1995)
63. Bernard V, Kaiser N, Meissner Ulf-G *Nucl. Phys. A* **619** 261 (1997)
64. Meissner Ulf-G, in *Proc. Int. Workshop* "*Chiral Dynamics: Theory and Experiment*" (Lecture Notes in Physics, Vol. 513, Eds A Bernstein, D Drechsel, T Walcher) (Singapore: Springer-Verlag, 1998) p. 337
65. Kaiser N *πN-Newsletter* **13** 308 (1997)
66. Bel'kov A A, Bunyatov S A, Mukhin K N, Patarakin O O *Pion-Pionnoe Vzaimodeĭstvie* (Pion – Pion Interaction) (Moscow: Energoatomizdat, 1985)
67. Kernel G et al. *Phys. Lett. B* **216** 244 (1989)
68. Kernel G et al. *Phys. Lett. B* **225** 198 (1989)
69. Kernel G et al., Preprint CERN PPE/90-152 (1990)
70. Kernel G et al. *Z. Phys.* **48** 201 (1990)
71. Kernel G et al. *Z. Phys.* **51** 377 (1991)
72. Sevior M et al. *Phys. Rev. Lett.* **66** 2569 (1991)
73. Ortner H-W et al. *Phys. Rev. C* **47** R447 (1993)
74. Müller R et al. *Phys. Rev. C* **48** 981 (1993)
75. Lowe J et al. *Phys. Rev. C* **44** 956 (1991)
76. Počanić D et al. *Phys. Rev. Lett.* **72** 1156 (1994)
77. Sevior M, in *Proc. Int. Workshop* "*Chiral Dynamics: Theory and Experiment*" (Lecture Notes in Physics, Vol. 513, Eds A Bernstein, D Drechsel, T Walcher) (Singapore: Springer-Verlag, 1998) p. 377
78. Kermani M et al. *πN-Newsletter* **13** 27 (1997)
79. Lange J B et al. *πN-Newsletter* **13** 32 (1997)
80. Bolokhov A A, Vereshchagin V V, Sherman S G *Yad. Fiz.* **46** (2) 585 (1987) [*Sov. J. Nucl. Phys.* **46** 322 (1987)]
81. Bolokhov A A, Vereshagin V V, Sherman S G *Nucl. Phys. A* **530** 660 (1991)
82. Olsson M G, Turner L *Phys. Rev.* **181** 2141 (1969)
83. Olsson M G, Turner L *Phys. Rev. Lett.* **38** 296 (1977)

84. Olsson M G et al. *πN-Newsletter* **10** 201 (1995)
85. Kambor J, in *Proc. Int. Workshop* "*Chiral Dynamics*: *Theory and Experiment*" (Lecture Notes in Physics, Vol. 513, Eds A Bernstein, D Drechsel, T Walcher) (Singapore: Springer-Verlag, 1998) p. 138
86. Dashen R, Weinstein M *Phys. Rev.* **183** 1261 (1969)
87. Bel'kov A A, Bunyatov S A *Yad. Fiz.* **29** 666 (1979) [*Sov. J. Nucl. Phys.* **29** 666 (1979)]
88. Aaron R et al. *Phys. Rev. Lett.* **44** 66 (1980)
89. Bjork C W et al. *Phys. Rev. Lett.* **44** 62 (1980)
90. Lowe J et al. *Phys. Rev. C* **44** 956 (1991)
91. Lowe J, Burkhardt H *πN-Newsletter* **8** 114 (1993)
92. Burkhardt H, Lowe J *πN-Newsletter* **12** 58 (1997)
93. Vereshagin V et al. *Nucl. Phys. A* **592** 413 (1995)
94. Alekseeva E A et al. *Zh. Eksp. Teor. Fiz.* **82** 1007 (1982) [*Sov. Phys. JETP* **55** 591 (1982)]
95. Aĭnutdinov M S et al. *Prib. Tekh. Eksp.* **2** 47 (1968)
96. Van Hove L *Nucl. Phys. B* **9** 331 (1969)
97. Roy S M *Phys. Lett. B* **36** 353 (1971)
98. Basdevant J L, Frogatt C D, Petersen J L *Nucl. Phys. B* **72** 413 (1974)
99. Patarakin O O, Tikhonov V N, Mukhin K N *Nucl. Phys. A* **598** 335 (1996)
100. Morgan D, Shaw G *Phys. Rev. D* **2** 520 (1970)
101. Hite G E, Kaufmann W B *Phys. Rev. C* **57** 931 (1998)
102. Estabrooks P, Martin A D *Nucl. Phys. B* **79** 301 (1974); **95** 322 (1975)
103. Bunyatov S A et al. *Yad. Fiz.* **25** 325 (1977) [*Sov. J. Nucl. Phys.* **25** 177 (1977)]
104. Bel'kov A A et al. *Yad. Fiz.* **31** 181 (1980) [*Sov. J. Nucl. Phys.* **31** 96 (1980)]
105. Manley D M *Phys. Rev. D* **30** 536 (1984)
106. Raywood K J et al. *Nucl. Instrum. Methods A* **365** 135 (1995)
107. Frlež E et al. *πN-Newsletter* **11** 132 (1995)
108. Počanić D, in *Proc. Int. Workshop* "*Chiral Dynamics*: *Theory and Experiment*" (Lecture Notes in Physics, Vol. 513, Eds A Bernstein, D Drechsel, T Walcher) (Singapore: Springer-Verlag, 1998) p. 352
109. Jaekel O et al. *Nucl. Phys. A* **511** 733 (1990)
110. Jaekel O, Dillig M, Vasconcellos C A Z *Nucl. Phys. A* **541** 675 (1992)
111. Jaekel O, Dillig M *Nucl. Phys. A* **561** 557 (1993)
112. Kermani M et al. *Phys. Rev. C* **58** 3431 (1998)
113. Baton J P, Laurens G, Reignier J *Nucl. Phys. B* **3** 349 (1967)
114. Johnson R R *πN-Newsletter* **11** 138 (1995)
115. Bolokhov A A, Polyakov M V, Sherman S G *Europhys. J. A* **1** 317 (1998)
116. Lowe J, Burkhardt H *πN-Newsletter* **3** 114 (1991)
117. Okun' L B, Shabalin E P *Zh. Eksp. Teor. Fiz.* **37** 1775 (1959) [*Sov. Phys. JETP* **10** 1254 (1960)]
118. Shabalin E P *Zh. Eksp. Teor. Fiz.* **44** 765 (1963) [*Sov. Phys. JETP* **17** 517 (1963)]
119. Cabibbo N, Maksymowicz A *Phys. Rev. B* **137** 438 (1966)
120. Ely R P et al. *Phys. Rev.* **180** 1319 (1969)
121. Schwinberger W et al. *Phys. Lett. B* **36** 246 (1971)
122. Bourquin M et al. *Phys. Lett. B* **36** 615 (1971)
123. Basile P et al. *Phys. Lett. B* **36** 619 (1971)
124. Zylbersztejn A et al. *Phys. Lett. B* **38** 457 (1972)
125. Beier E W et al. *Phys. Rev. Lett.* **29** 511 (1972); **30** 399 (1973)
126. Nagels M M et al. *Nucl. Phys. B* **147** 189 (1979); Dumbrais O et al. *Nucl. Phys. B* **216** 277 (1983)
127. Lowe J, in *Proc. Int. Workshop* "*Chiral Dynamics*: *Theory and Experiment*" (Lecture Notes in Physics, Vol. 513, Eds A Bernstein, D Drechsel, T Walcher) (Singapore: Springer-Verlag, 1998) p. 375
128. Vigdor S E πN-*Newsletter* **13** 181 (1997)
129. Efimov G V, Ivanov M A, Lyubovitskiĭ V E *Yad. Fiz.* **44** 460 (1986) [*Sov. J. Nucl. Phys.* **44** 296 (1986)]
130. Uretsky J L, Palfrey T R *Phys. Rev.* **121** 1798 (1961)
131. Bilen'kiĭ S M et al. *Yad. Fiz.* **10** 812 (1969)
132. Gashi A et al. nucl-th/9704017 (1997)
133. Bel'kov A A, Pervushin V N, Tkebuchava F G *Yad. Fiz.* **44** 466 (1986) [*Sov. J. Nucl. Phys.* **44** 300 (1986)]
134. Lyubovitskij V, Rusetsky A *Phys. Lett. B* **389** 181 (1996)
135. Gasser J, Leutwyler H *Ann. Phys.* (N.Y.) **158** 142 (1984)
136. Afanasyev L G et al. *Phys. Lett. B* **308** 200 (1993); **338** 478 (1994)
137. Nemenov L L *Yad. Fiz.* **41** 980 (1985) [*Sov. J. Nucl. Phys.* **41** 629 (1985)]
138. Adeva B et al., CERN SPSLC Proposal (1994)
139. Betker A C et al. *Phys. Rev. Lett.* **77** 3510 (1996)
140. Pollock R E *Ann. Rev. Nucl. Part. Sci.* **41** 357 (1991)
141. Pickar M A et al. *Phys. Rev. C* **46** 397 (1992)
142. Bonutti F et al. *Phys. Rev. Lett.* **77** 603 (1996)
143. Klem R D et al. *Phys. Rev. Lett.* **36** 929 (1976)
144. Dragoset W H et al. *Phys. Rev. D* **18** 3939 (1978)
145. Bonner B E et al. *Phys. Rev. D* **38** 729 (1988)
146. Bonner B E et al. *Phys. Rev. Lett.* **61** 1918 (1988)
147. Dick L et al. *Phys. Lett. B* **57** 93 (1975)
148. Antille J et al. *Phys. Lett. B* **94** 523 (1980)
149. Apokin V D et al., Serpukhov Report IHEP-89-37 (1989)
150. Becker H et al. *Nucl. Phys. B* **150** 301 (1979); **151** 46 (1979)
151. De Lesquen A et al., CERN-Saclay Int. Report DPLPE 82-01 (1988)
152. De Lesquen A et al. *Phys. Rev. D* **32** 21 (1985)
153. De Lesquen A et al. *Phys. Rev. D* **39** 21 (1989)
154. Svec M, de Lesquen A, van-Rossum L *Phys. Rev. D* **42** 934 (1990)
155. Svec M, de Lesquen A, van-Rossum L *Phys. Rev. D* **45** 55 (1992)
156. Svec M *Phys. Rev. D* **47** 2132 (1993)
157. Svec M, de Lesquen A, van-Rossum L *Phys. Rev. D* **46** 949 (1992)
158. Svec M *Phys. Rev. D* **53** 2343 (1996)
159. Alekseev I G et al., Preprint GNTs-RF-ITEP 19-97 (Moscow: ITEP, 1997)
160. Bobchenko B M et al., Preprint ITEP N12 (Moscow: ITEP, 1992)
161. Alekseev I G et al. *Nucl. Phys. B* **348** 257 (1991)
162. Alekseev I G et al. *Yad. Fiz.* **51** 425 (1990) [*Sov. J. Nucl. Phys.* **51** 271 (1990)]
163. Kaminski R et al. *Z. Phys. C* **74** 79 (1997)
164. Grayer G et al. *Nucl. Phys. B* **75** 189 (1974)
165. Srinivasan V et al. *Phys. Rev. D* **12** 681 (1975)
166. Hyams B et al. *Nucl. Phys. B* **100** 205 (1975)
167. Ochs W *Nuovo Cimento A* **12** 724 (1972)
168. Anisovich V V et al. *Phys. Lett. B* **323** 233 (1994); **364** 195 (1995)
169. Kamiński R, Leśniak L, Maillet J-P *Phys. Rev. D* **50** 3145 (1994)
170. Amsler C, Close F E *Phys. Rev. D* **53** 295 (1996)
171. Törnqvist N A *Z. Phys. C* **68** 647 (1995)
172. Törnqvist N A, Roos M *Phys. Rev. Lett.* **76** 1575 (1996)
173. "Particle Data Group Review of Particle Physics" *Europhys. J. C* **3** (1 – 4) (1998)
174. Taylor J C *Scattering Theory. The Quantum Theory of Nonrelativistic Collisions* (New York: John Wiley & Sons, 1972) [Translated into Russian (Moscow: Mir, 1975)]
175. Sannino F, Schechter J *Phys. Rev. D* **52** 96 (1995)
176. Harada M, Sannino F, Schechter J *Phys. Rev. D* **54** 1991 (1996)
177. Black D et al. *Phys. Rev. D* **58** 054012 (1998)
178. Ishida S et al. *Prog. Theor. Phys.* **95** 745 (1996)
179. Ishida M *Prog. Theor. Phys.* **96** 853 (1996)
180. Ishida S et al. *Prog. Theor. Phys.* **98** 621 (1997)
181. Ishida S et al. *Prog. Theor. Phys.* **98** 1005 (1997)
182. Ishida M, Ishida S, Ishida T *Prog. Theor. Phys.* **99** 1031 (1998)
183. Ishida M *Nucl. Phys. A* **629** 148c (1998)
184. Zou B S, Bugg D V *Phys. Rev. D* **48** R3948 (1993)
185. Zou B S, Bugg D V *Phys. Rev. D* **50** 591 (1994)
186. Dalitz R H, Tuan S *Ann. Phys.* (N.Y.) **10** 307 (1960)
187. Watson K M *Phys. Rev.* **95** 228 (1954)
188. Mennessier G *Z. Phys. C* **16** 241 (1983)
189. Beveren E et al. *Z. Phys. C* **30** 615 (1986)
190. Minami S *Prog. Theor. Phys.* **81** 1064 (1989)
191. Achasov N N, Shestakov G N *Phys. Rev. D* **49** 5779 (1994)
192. Sadler M, von Geramb H V *Phys. Rev. C* **56** 1218 (1997)
193. Weinberg S *Phys. Rev.* **177** 2604 (1969)
194. Weinberg S, in *Proc. Int. Workshop* "*Chiral Dynamics*: *Theory and Experiment*" (Lecture Notes in Physics, Vol. 452, Eds A M Bernstein, B R Holstein) (Singapore: Springer-Verlag, 1995) p. 3
195. Ogievetskiĭ V I *Yad. Fiz.* **13** 187 (1971)
196. Ogievetskiĭ V I, in *Problemy Teoreticheskoĭ Fiziki. Pamyati I E Tamma* (Collection 'Problems of Theoretical Physics. In Memory of I E Tamm') (Moscow: Nauka, 1972) p. 234
197. Vereshagin A, Vereshagin V *Phys. Rev. D* **59** 016002 (1999)
198. Bramon A, Riazuddin, Scadron M D *J. Phys. G* **24** 1 (1998)
199. Delbourgo P, Scadron M D *Int. J. Mod. Phys. A* **13** 657 (1998)
200. Delbourgo P, Liu D, Scadron M D *Phys. Lett. B* **446** 332 (1999)
201. Törnqvist N A *Phys. Rev. Lett.* **78** 1604 (1997)

202. Black D et al. *Phys. Rev. D* **59** 074026 (1999)
203. Fariborz A H, Schechter J *Phys. Rev. D* **60** 034002 (1999)
204. Hannah T *Phys. Rev. D* **60** 017502 (1999)
205. Alkhazov G, Kravtsov A, Prokofiev A *Status of the SPES – 4π Experiment at Saclay* Conference talk at 8th Int. Symp. MENU'99, Zuoz, Switzerland, August 15 – 21, 1999
206. Anisovich V V, Nikonov V A "The low mass σ-meson: is it an eyewitness of confinement?", hep-ph/9911512
207. Weinberg S *Physica A* **96** 327 (1979)
208. Vereshagin V *Phys. Rev. D* **55** 5349 (1997)
209. Gerstein I S et al. *Phys. Rev. D* **3** 2486 (1971)
210. Gasser J, Leutwyler H *Phys. Lett. B* **125** 325 (1983)
211. Gasser J, Leutwyler H *Nucl. Phys. B* **250** 465, 517, 539 (1985)
212. Donoghue J F, Golovich E, Holstein B R *Dynamics of the Standard Model* (Cambridge: Cambridge Univ. Press, 1992)
213. Peskin M E, Schroeder D V *An Introduction to Quantum Field Theory* (Reading, MA: Addison-Wesley Publ. Co., 1995)
214. Weinberg S *Phys. Rev.* **166** 1568 (1968)
215. Coleman S, Wess J, Zumino B *Phys. Rev.* **177** 2239 (1969)
216. Callan C G et al. *Phys. Rev.* **177** 2247 (1969)
217. Dietz K, Honerkamp J *Z. Phys.* **222** 46 (1969)
218. Honerkamp J *Nucl. Phys. B* **12** 227 (1969)
219. Bardeen W A, Lee B W *Phys. Rev.* **177** 2389 (1969)
220. Gell-Mann M, Oakes R J, Renner B *Phys. Rev.* **175** 2195 (1968)
221. Glashow S, Weinberg S *Phys. Rev. Lett.* **20** 224 (1968)
222. Weinberg S, in *Festschrift for I.I. Rabi* (Ed. L Motz) (New York: N.Y. Acad. Sci., 1977) p. 185
223. Gasser J, Leutwyler H *Phys. Rep.* **87** 77 (1982)
224. Leutwyler H *Nucl. Phys. B* **337** 108 (1990)
225. Leutwyler H *Phys. Lett. B* **378** 313 (1996)
226. Meissner Ulf-G *Rep. Prog. Phys.* **56** 903 (1993)
227. Ecker G *Prog. Part. Nucl. Phys.* **35** 1 (1995)
228. *Proc. Int. Workshop* "*Chiral Dynamics*: *Theory and Experiment*" (Lecture Notes in Physics, Vol. 513, Eds A Bernstein, D Drechsel, T Walcher) (Singapore: Springer-Verlag, 1998)
229. "Proc. of the Int. Symposium on Meson – Nucleon Physics and the Structure of the Nucleon" *πN-Newsletter* **13** (1997)
230. Fuchs N H, Sadzijan H, Stern J *Phys. Lett. B* **238** 380 (1990); **269** 183 (1991)
231. Stern J, Sadzijan H, Fuchs N H *Phys. Rev. D* **47** 3814 (1993)
232. Knecht M et al. *Nucl. Phys. B* **457** 513 (1995); **471** 445 (1996)
233. Bijnens J et al. *Phys. Lett. B* **374** 210 (1996)
234. Stern J, Invited talk at the *Workshop on Physics and Detectors for DAΦNE* (Frascati, 1995); hep-ph/9510318
235. Colangelo G, Knecht M, Stern J, Preprint IPNO/TH 94-36 (1994); hep-ph/9406211
236. Anikeev V B, Zhigunov V P *Fiz. Elem. Chastits At. Yadra* **24** 989 (1993) [*Phys. Part. Nucl.* **24** 424 (1993)]
237. Tikhonov A N, Arsenin V Ya *Metody Resheniya Nekorrektnykh Zadach* (Methods for Solving Ill-Posed Problems) (Moscow: Nauka, 1986); see also: *Solutions of Ill-Posed Problems* (Washington: Distributed Solely by Halsted Press, 1977)
238. Vasil'ev F P *Chislennye Metody Resheniya Ekstremal'nykh Zadach* (Numerical Methods for the Solution of Extreme Problems) (Moscow: Nauka, 1981)
239. Jansson P A (Ed.) *Deconvolution with Application in Spectroscopy* (London: Academic Press, 1984)
240. Turchin V F, Kozlov V P, Malkevich M S *Usp. Fiz. Nauk* **102** 345 (1970) [*Sov. Phys. Usp.* **13** 681 (1971)]
241. Vereshagin V et al. *πN-Newsletter* **10** 176 (1995)
242. Bolokhov A A, Polyakov M V, Sherman S G, Preprint PIYaF 2197 NP-55-1997 (St. Petersburg: PIYaF, 1997)
243. Ecker G, in *Proc. Int. Workshop* "*Chiral Dynamics*: *Theory and Experiment*" (Lecture Notes in Physics, Vol. 513, Eds A Bernstein, D Drechsel, T Walcher) (Singapore: Springer-Verlag, 1998) p. 337
244. Girlanda L et al. *Phys. Lett. B* **409** 461 (1997)
245. Leutwyler H, Talk given at the *DAΦNE Workshop* (Frascati, 1997); hep-ph/9709406
246. Maĭorov V N, Patarakin O O, Tikhonov V N *Yad. Fiz.* (in press)
247. Alekseeva E A, Mukhin K N, Patarakin O O *Yad. Fiz.* **35** 917 (1982) [*Sov. J. Nucl. Phys.* **35** 533 (1982)]